# GROUP 1 – RPV CLOSURE HEAD (Sheet 1 of 4)
# (Covers Worksheets RCS-RPVCH – 1 thru 24)

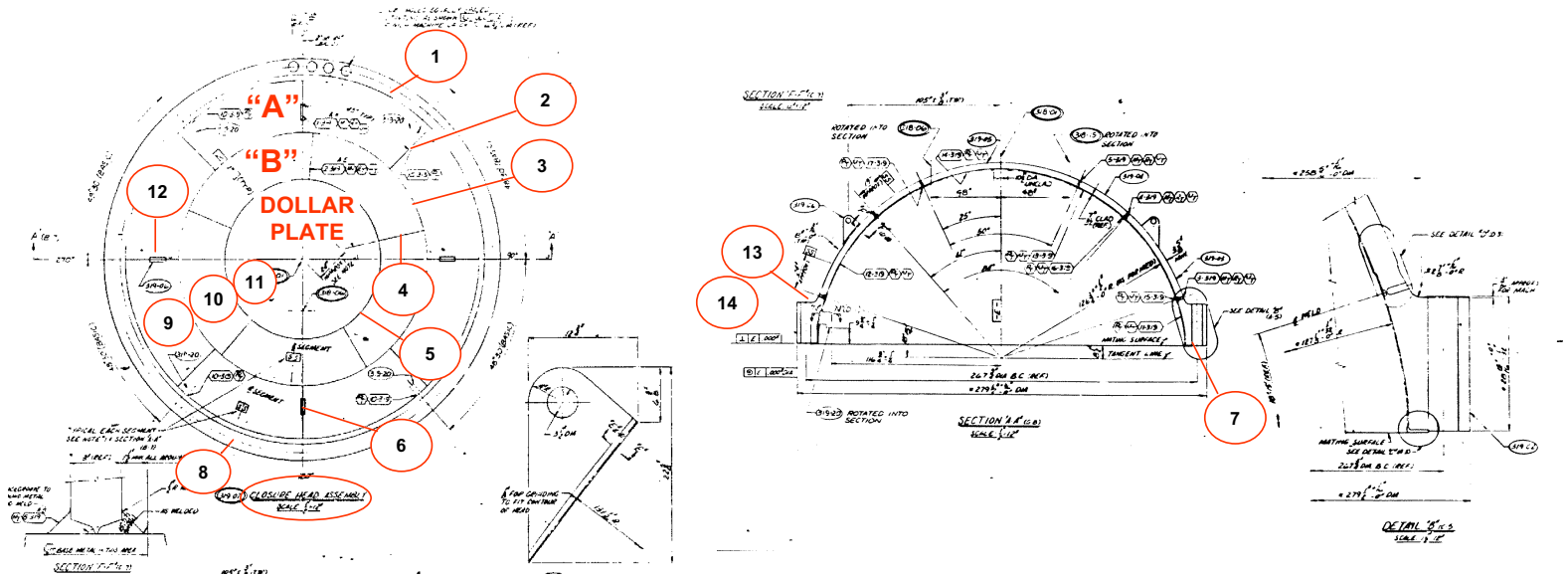

# GROUP 1 – RPV CLOSURE HEAD (Sheet 2 of 4)
# (Covers Worksheets RCS-RPVCH – 1 thru 24)

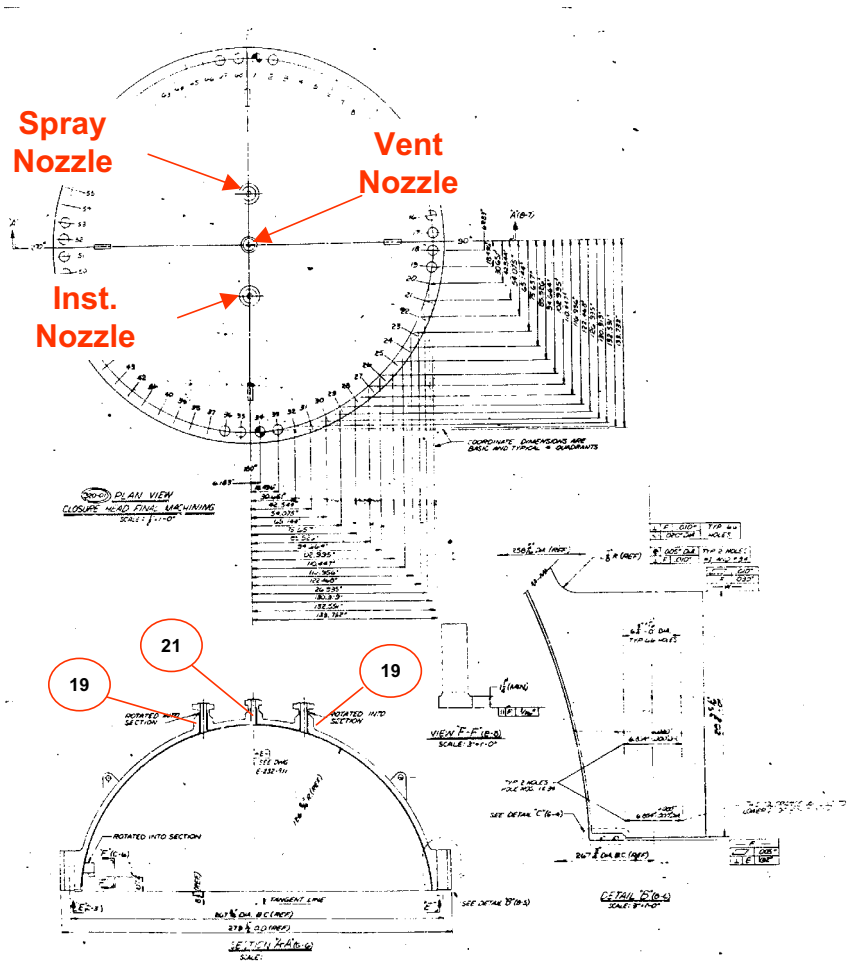

# GROUP 1 – RPV CLOSURE HEAD (Sheet 3 of 4)
# (Covers Worksheets RCS-RPVCH – 1 thru 24)

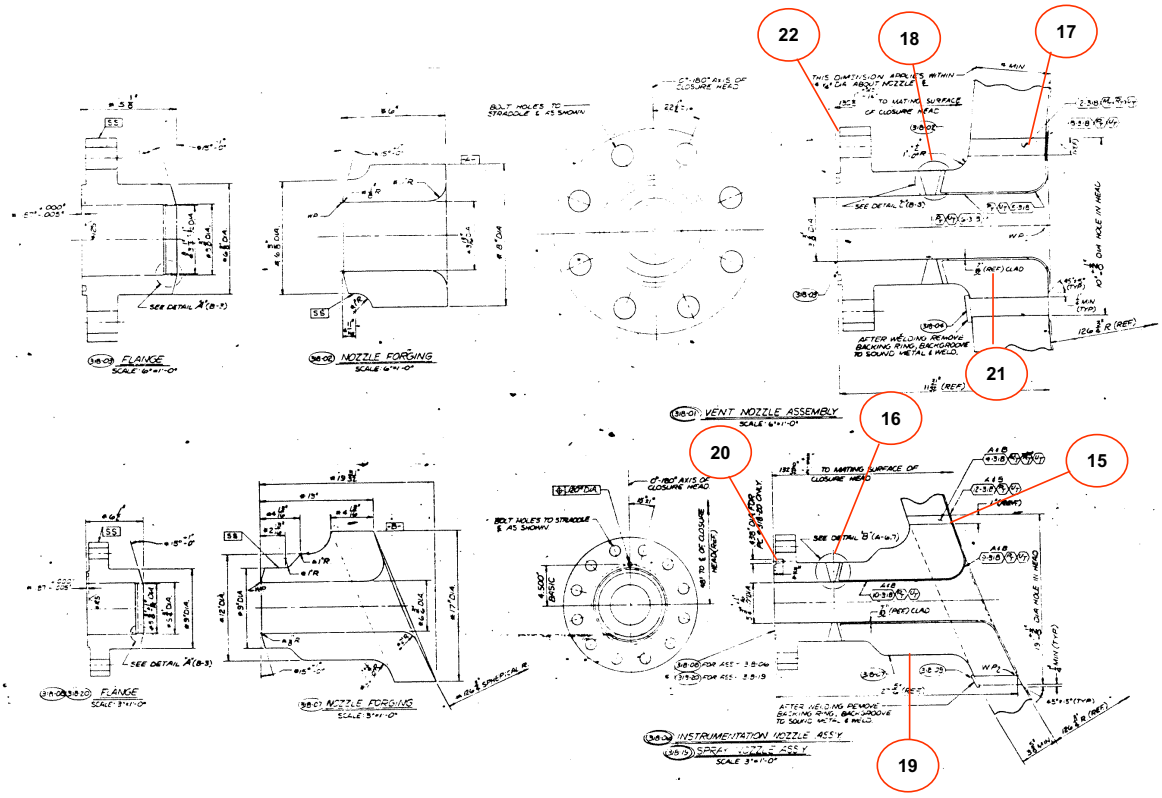

# GROUP 1 – RPV CLOSURE HEAD (Sheet 4 of 4)
# (Covers Worksheets RCS-RPVCH – 1 thru 24)

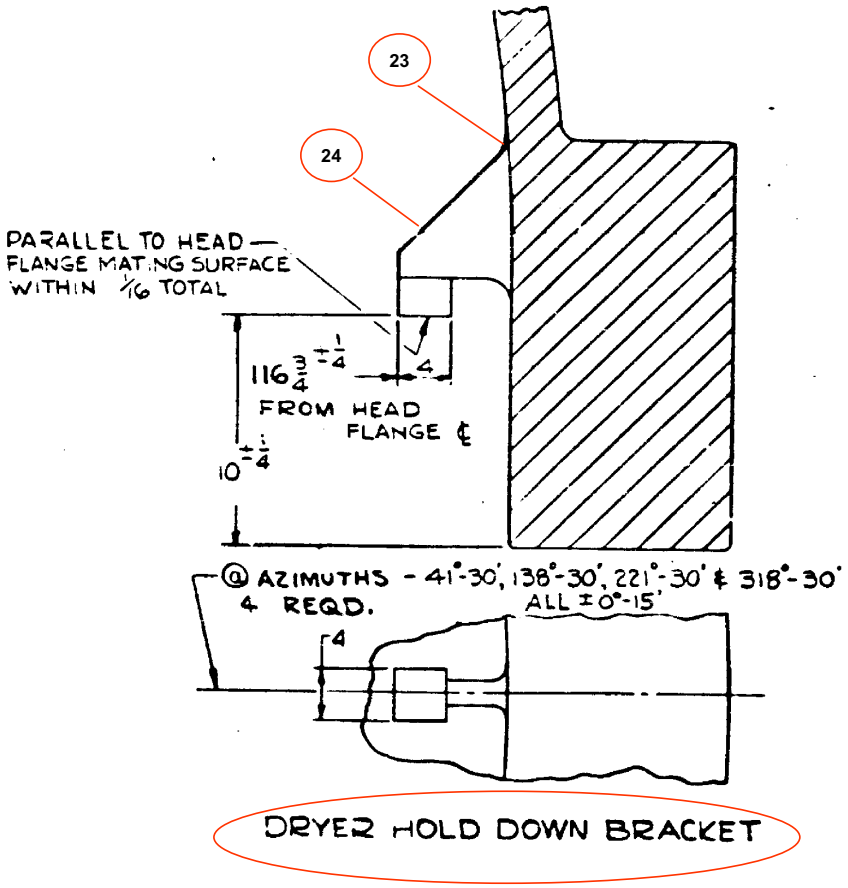

# GROUP 2 – RPV SHELL (Sheet 1 of 7 )
# (Covers Worksheets RCS-RPVSHL – 1 thru 88)

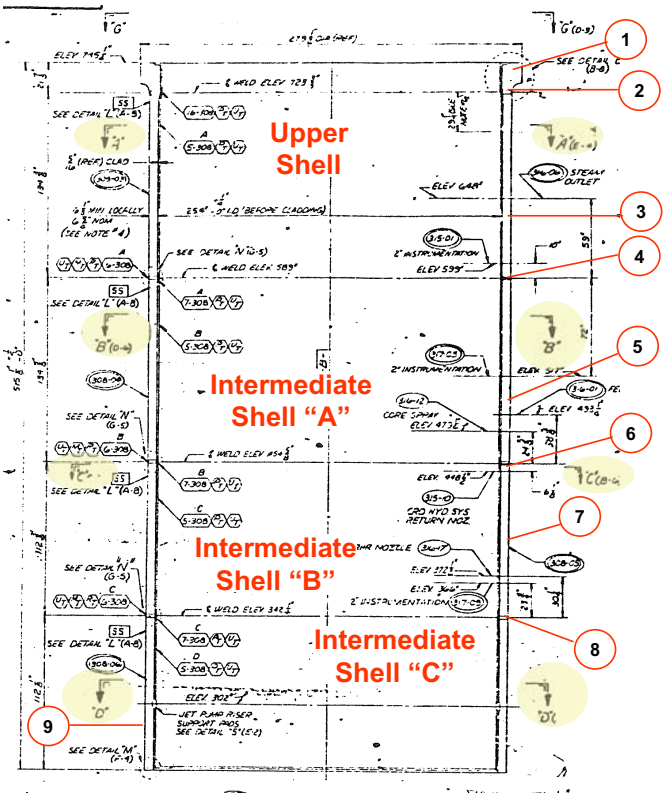


Upper Vessel Shell Assembly

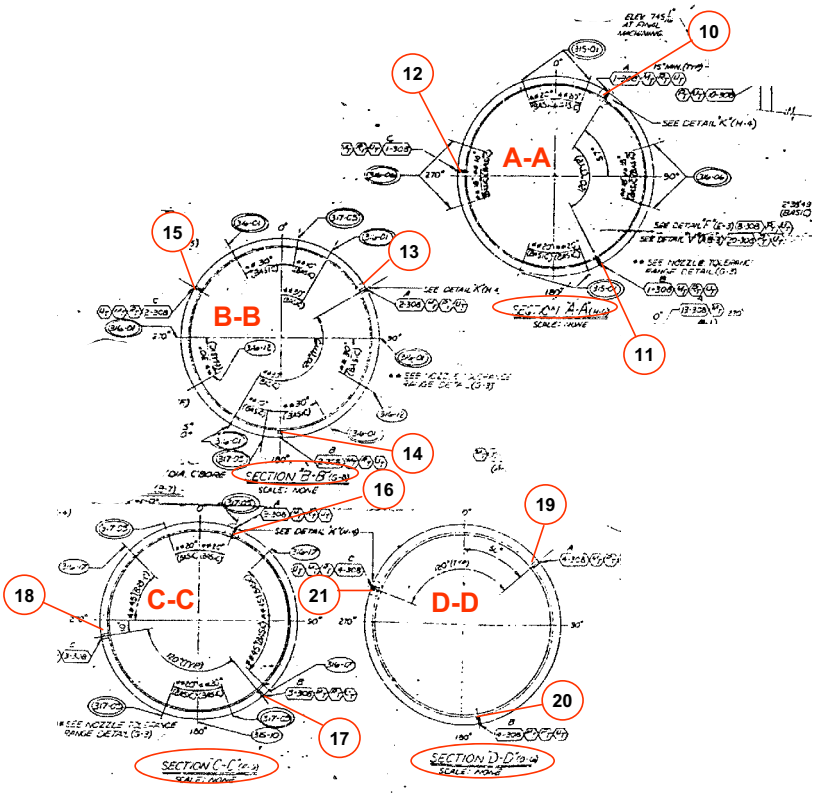

# GROUP 2 – RPV SHELL (Sheet 2 of 7 )
# (Covers Worksheets RCS-RPVSHL – 1 thru 88)

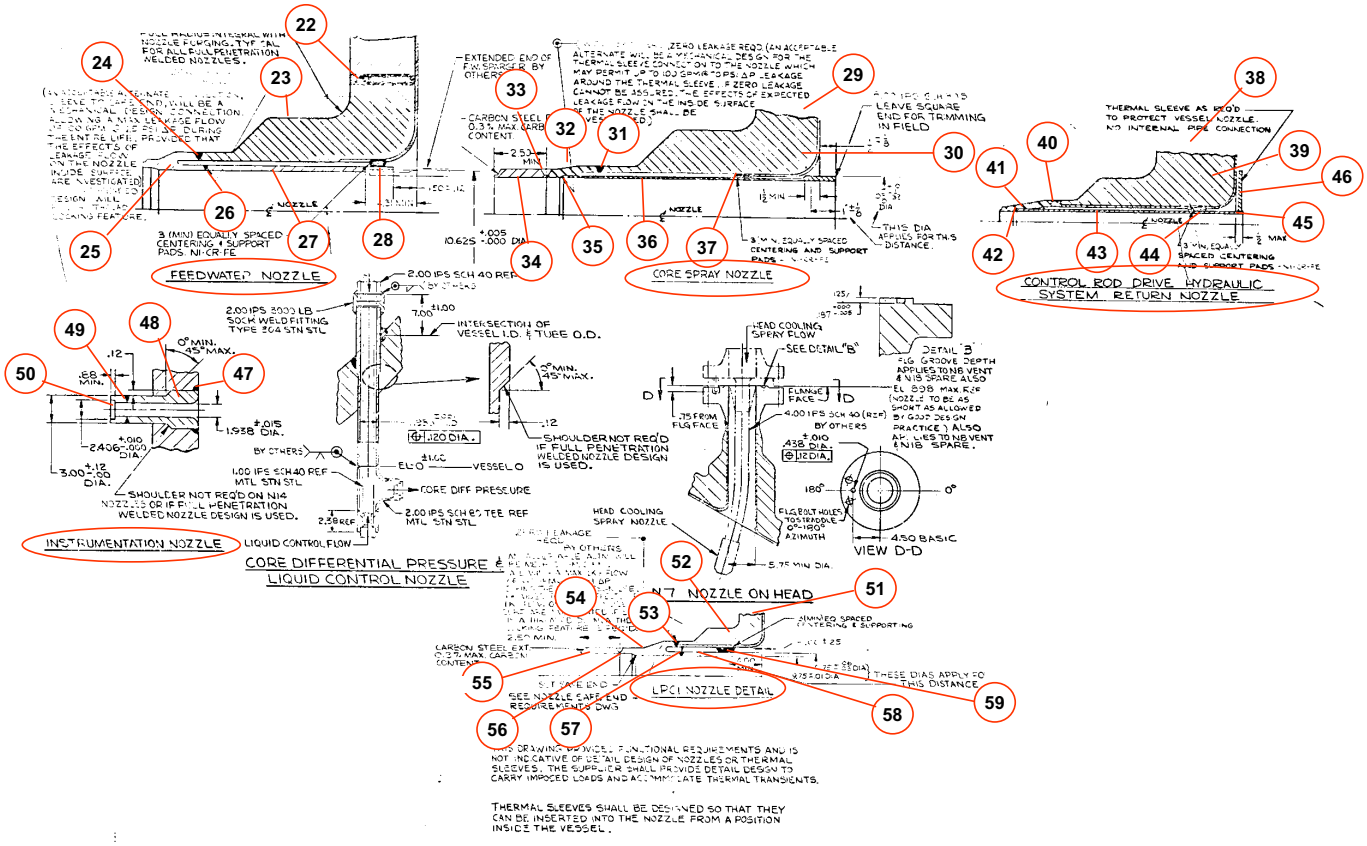

# GROUP 2 – RPV SHELL (Sheet 3 of 7 )
# (Covers Worksheets RCS-RPVSHL – 1 thru 88)

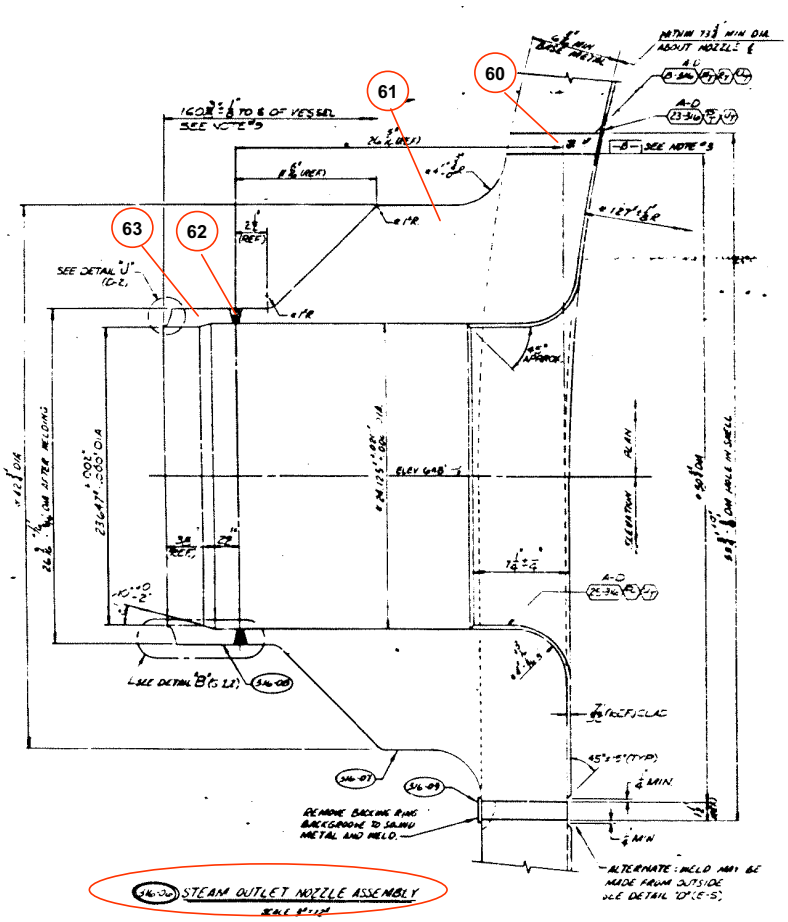

# GROUP 2 – RPV SHELL (Sheet 4 of 7 )
# (Covers Worksheets RCS-RPVSHL – 1 thru 88)

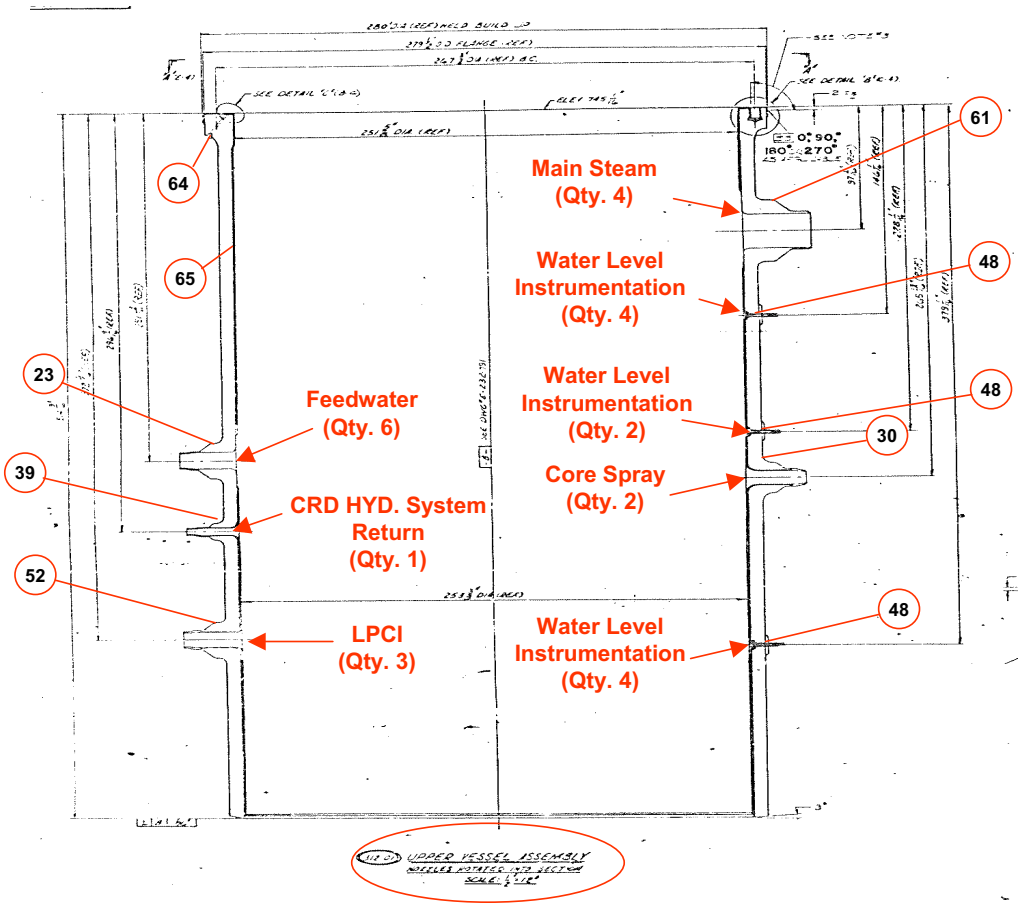

# GROUP 2 – RPV SHELL (Sheet 5 of 7 )
# (Covers Worksheets RCS-RPVSHL – 1 thru 88)

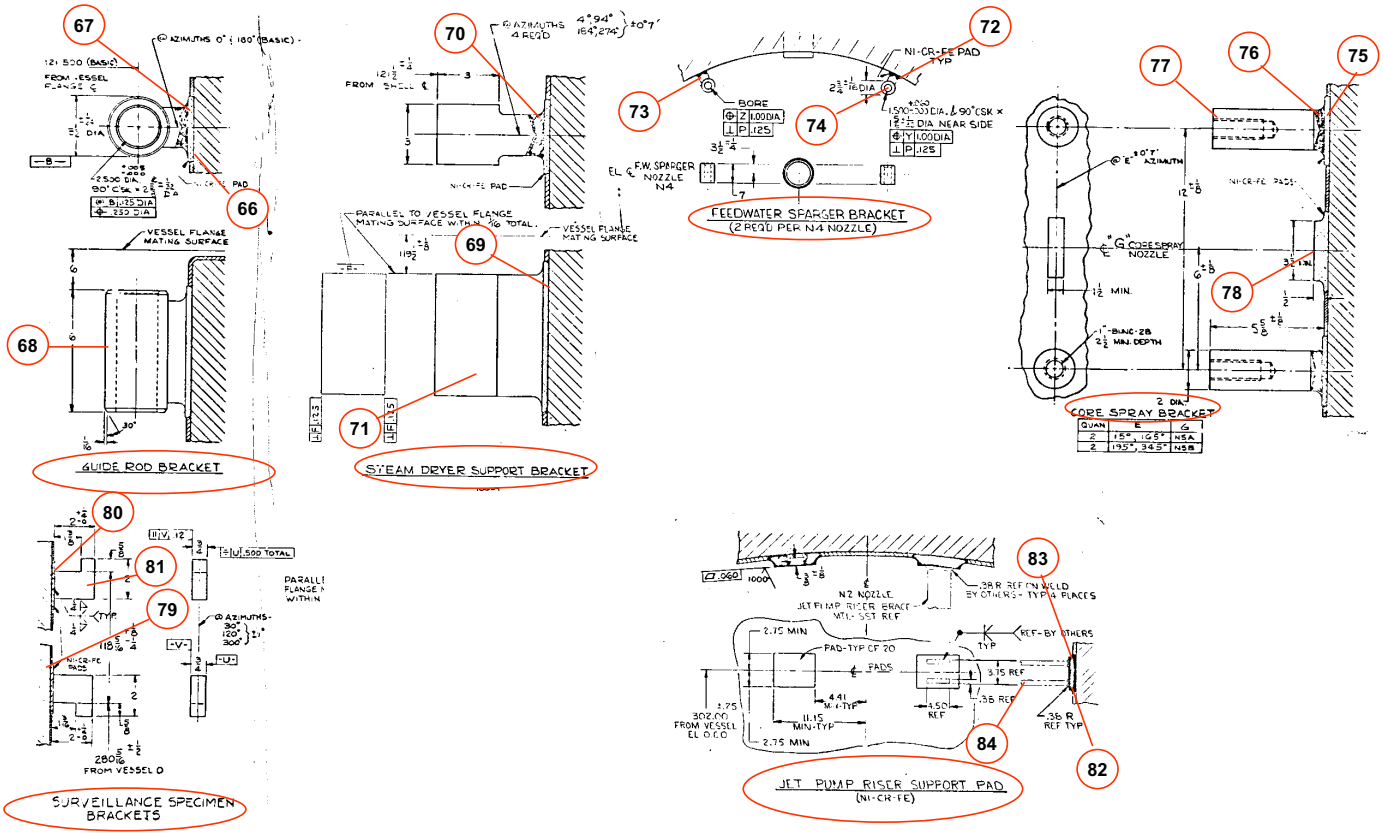

# GROUP 2 – RPV SHELL (Sheet 6 of 7 )
# (Covers Worksheets RCS-RPVSHL – 1 thru 88)

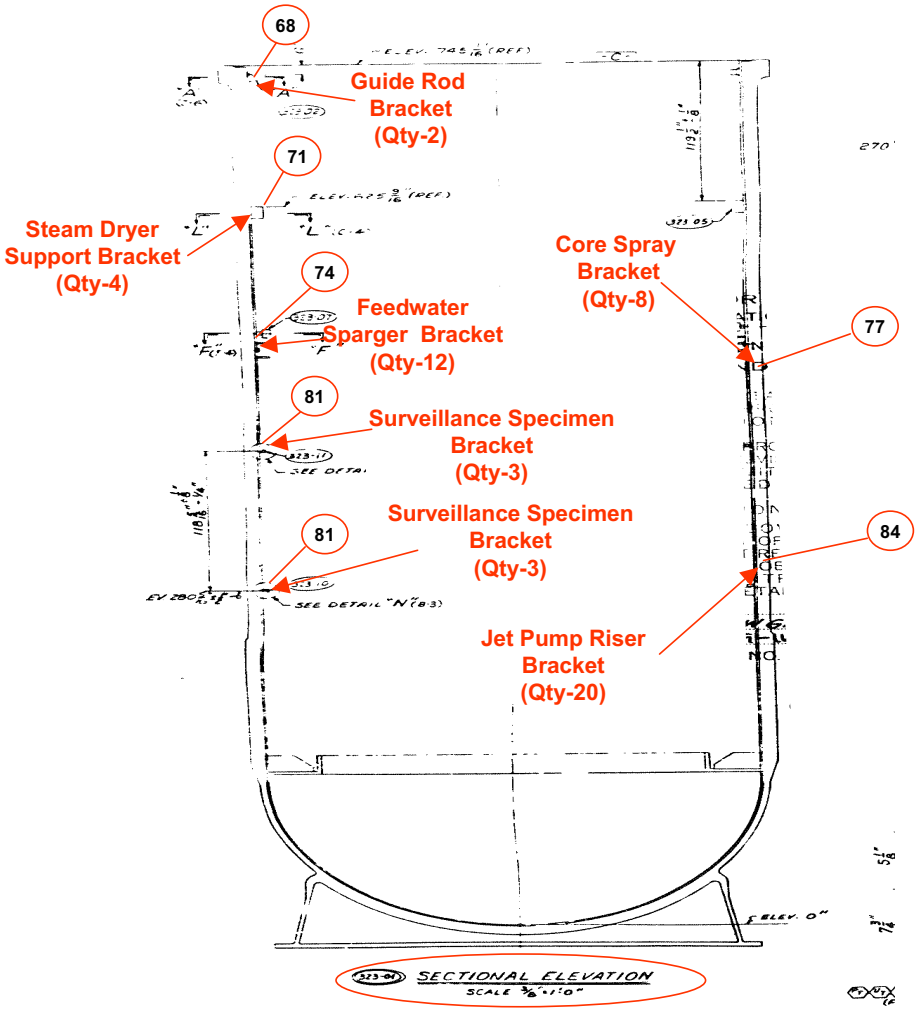

# GROUP 2 – RPV SHELL (Sheet 7 of 7 )
# (Covers Worksheets RCS-RPVSHL – 1 thru 88)

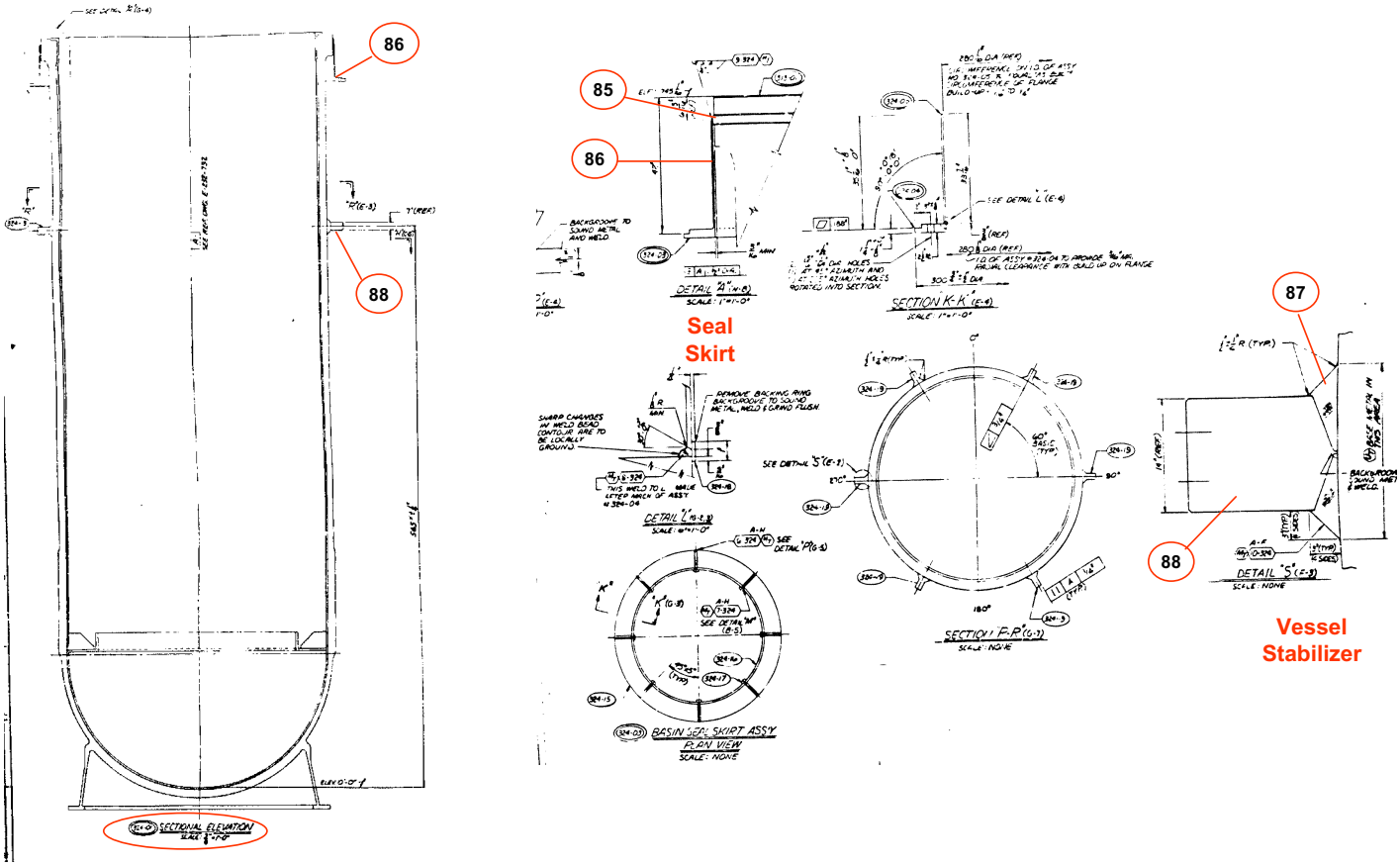

# GROUP 3 – RPV BOTTOM HEAD (Sheet 1 of 8)
# (Covers Worksheets RCS-RPVBH – 1 thru 55)

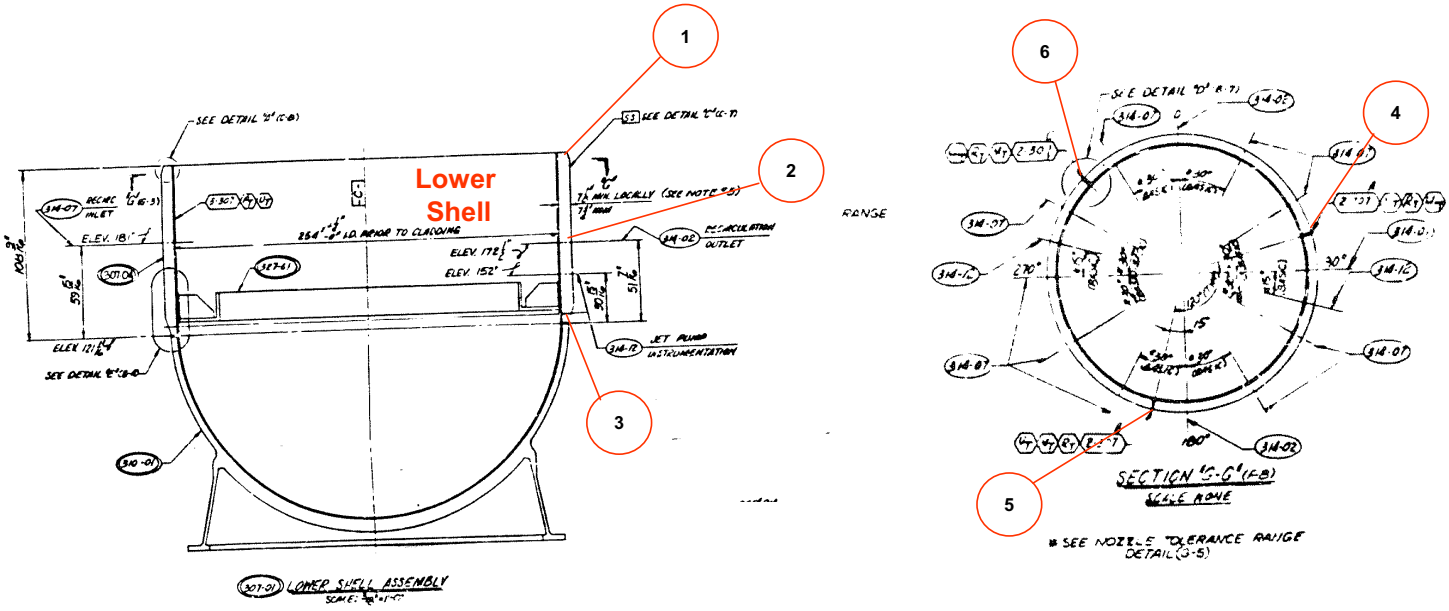

# GROUP 3 – RPV BOTTOM HEAD (Sheet 2 of 8)
# (Covers Worksheets RCS-RPVBH – 1 thru 55)

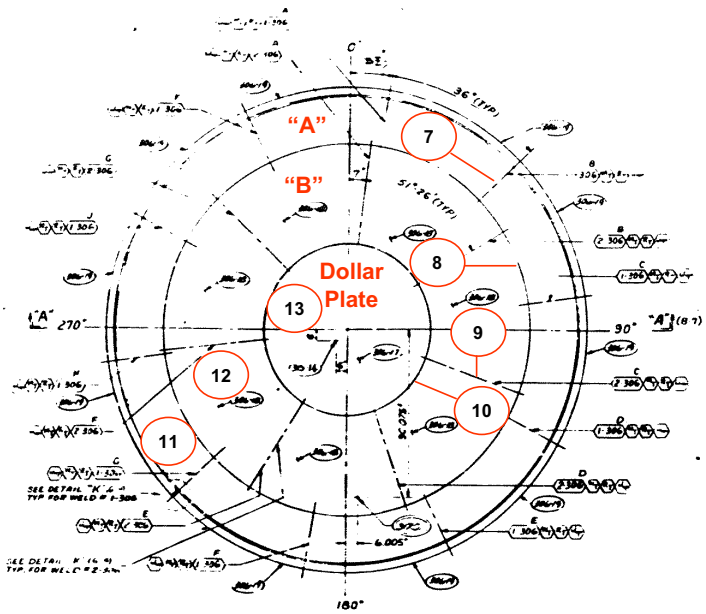

# GROUP 3 – RPV BOTTOM HEAD (Sheet 3 of 8)
# (Covers Worksheets RCS-RPVBH – 1 thru 55)

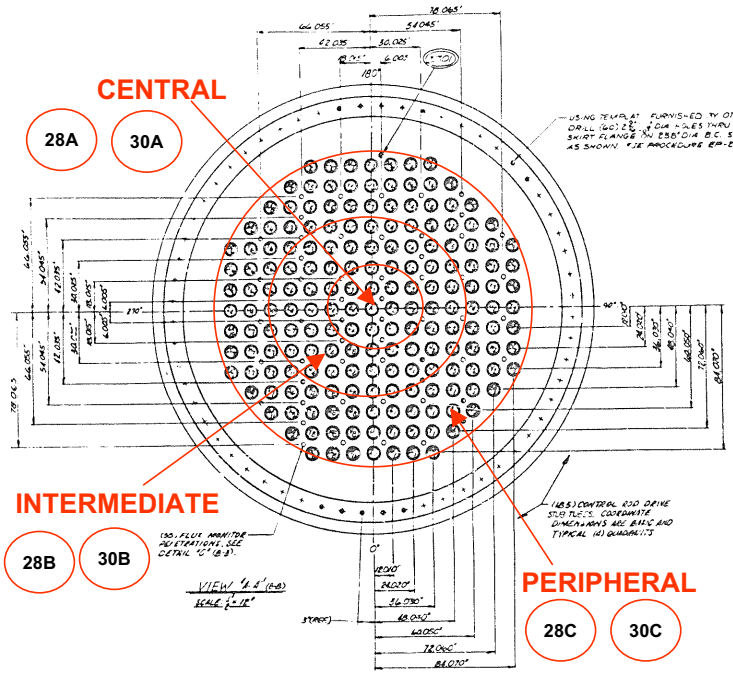


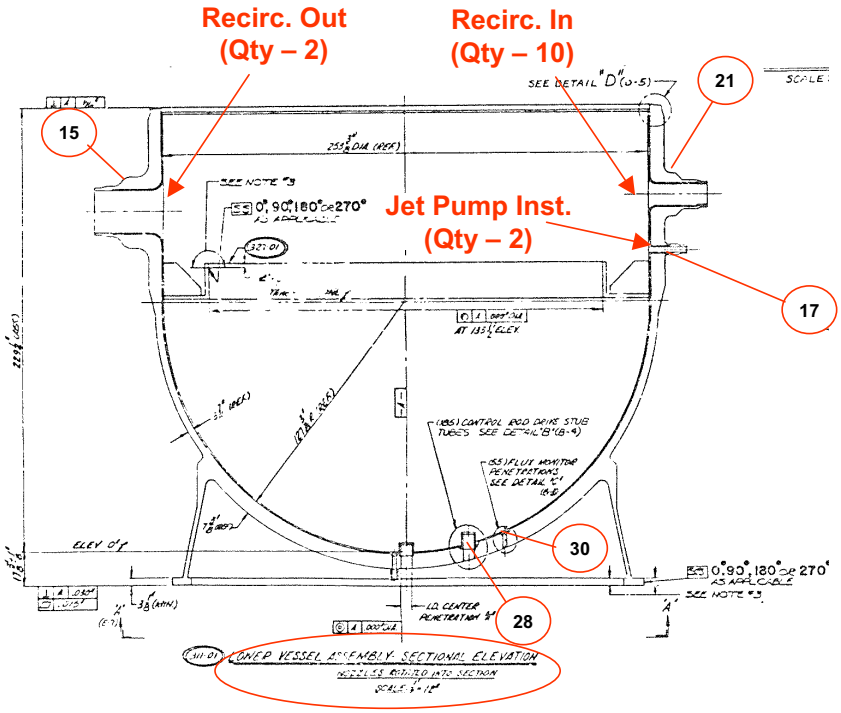

# GROUP 3 – RPV BOTTOM HEAD (Sheet 4 of 8)
# (Covers Worksheets RCS-RPVBH – 1 thru 55)

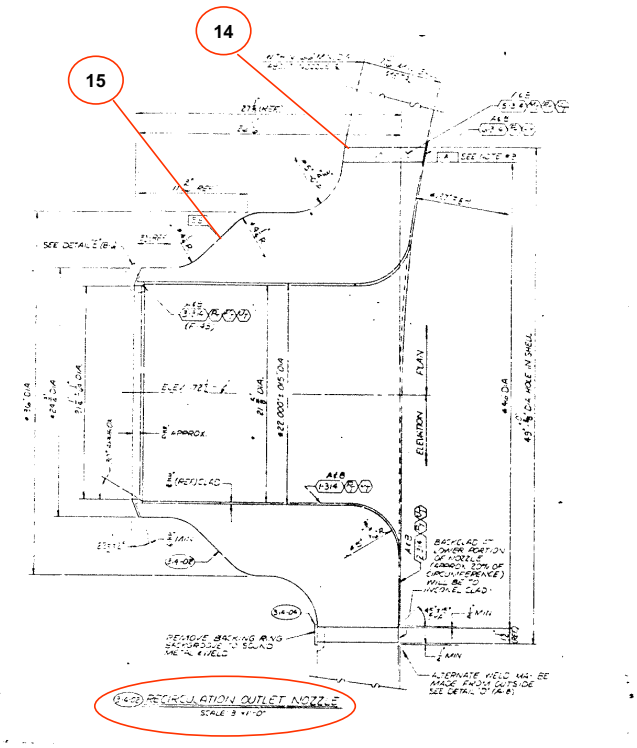


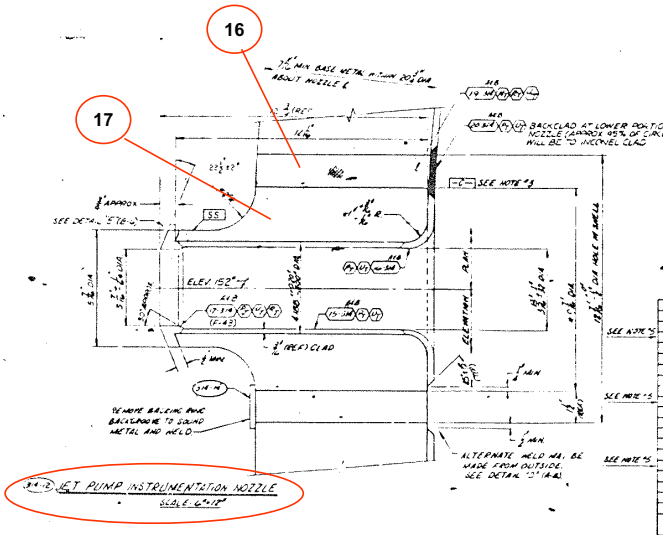

# GROUP 3 – RPV BOTTOM HEAD (Sheet 5 of 8)
# (Covers Worksheets RCS-RPVBH – 1 thru 55)

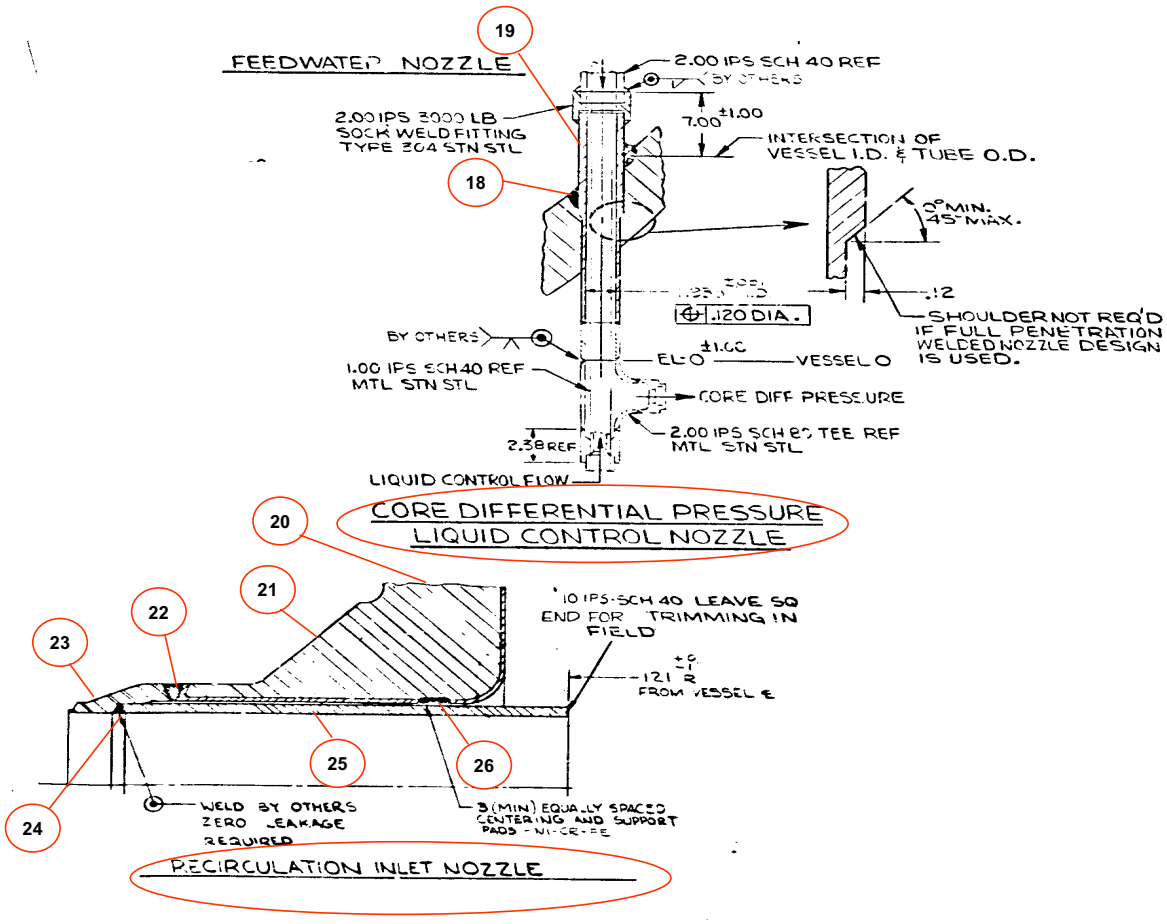

# GROUP 3 – RPV BOTTOM HEAD (Sheet 6 of 8)
# (Covers Worksheets RCS-RPVBH – 1 thru 55)

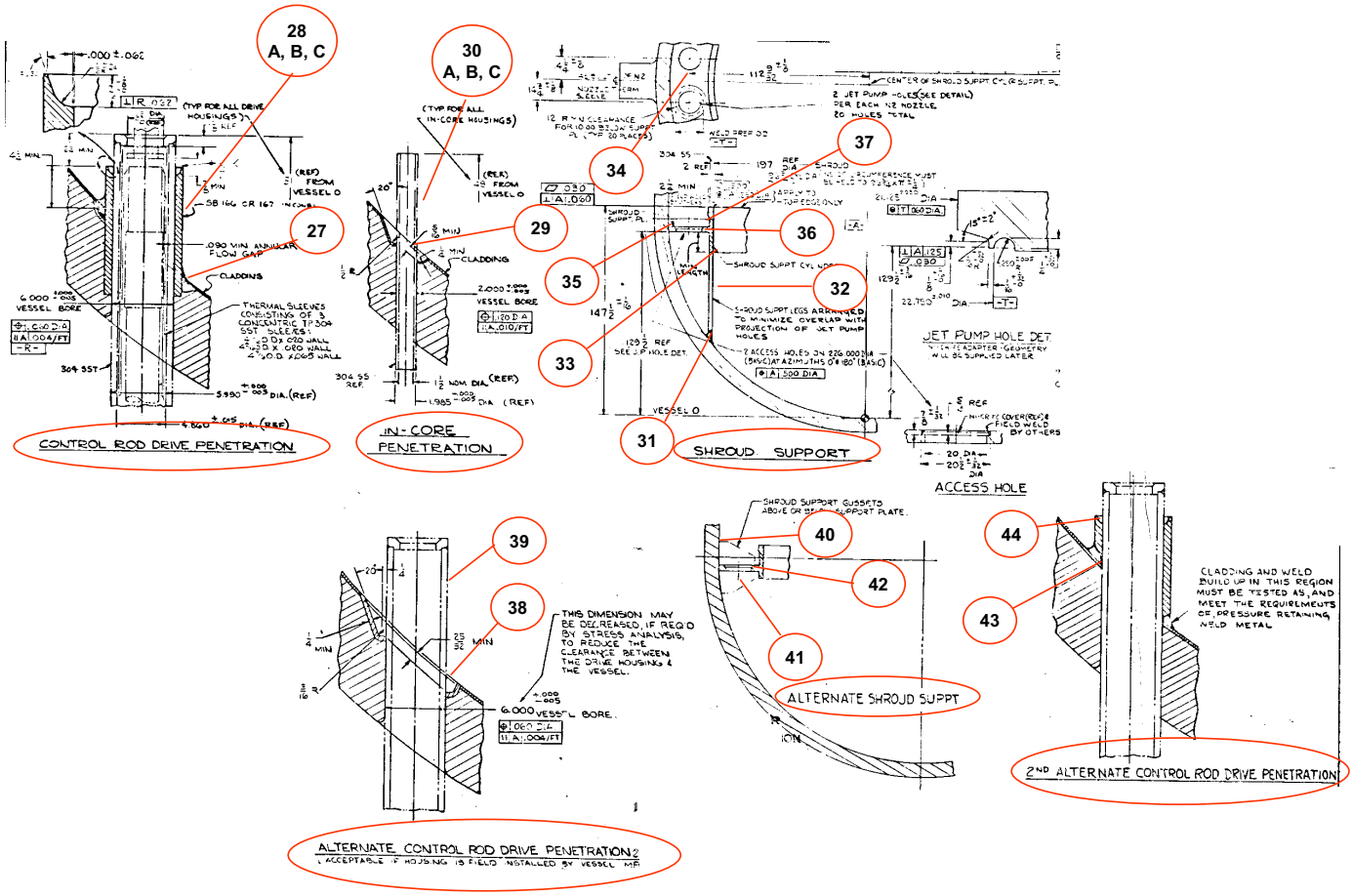

# GROUP 3 – RPV BOTTOM HEAD (Sheet 7 of 8)
# (Covers Worksheets RCS-RPVBH – 1 thru 55)

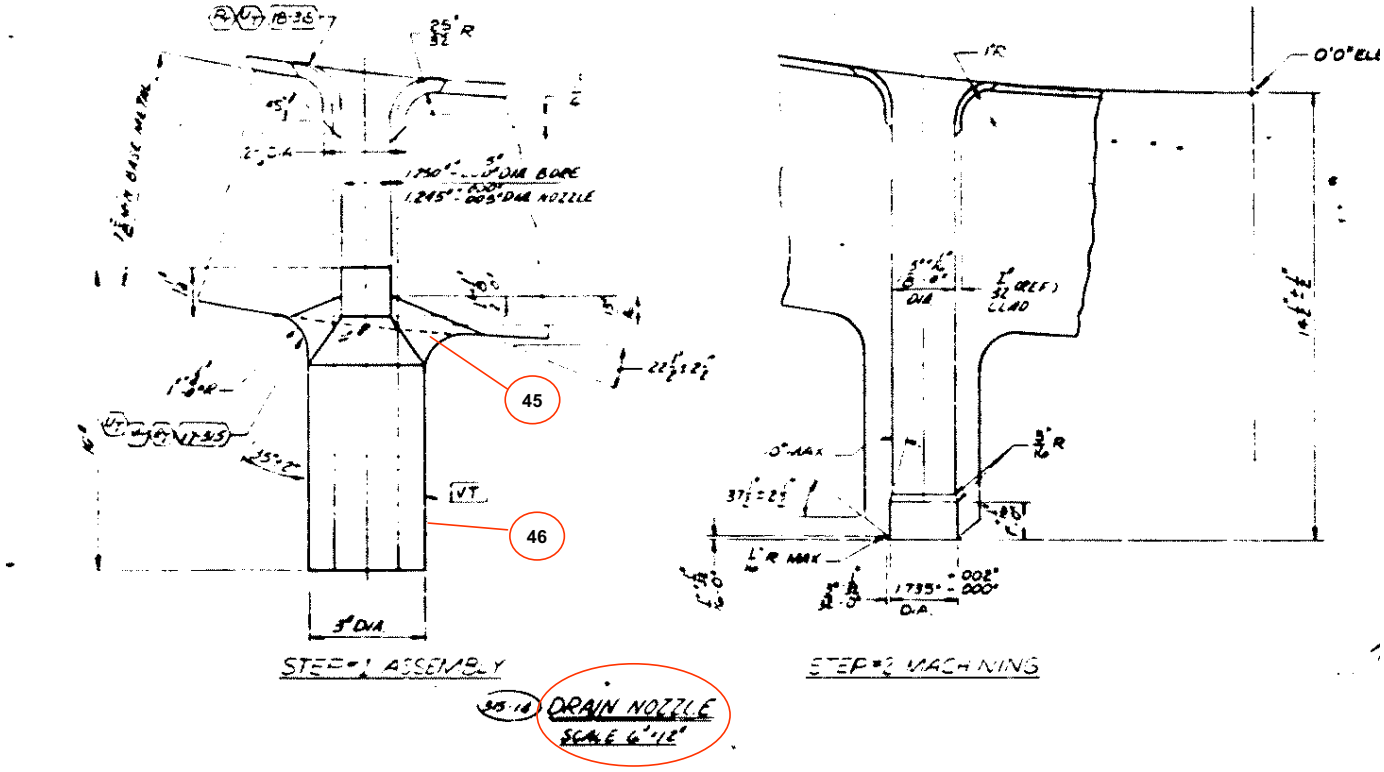

# GROUP 3 – RPV BOTTOM HEAD (Sheet 8 of 8)
# (Covers Worksheets RCS-RPVBH – 1 thru 55)

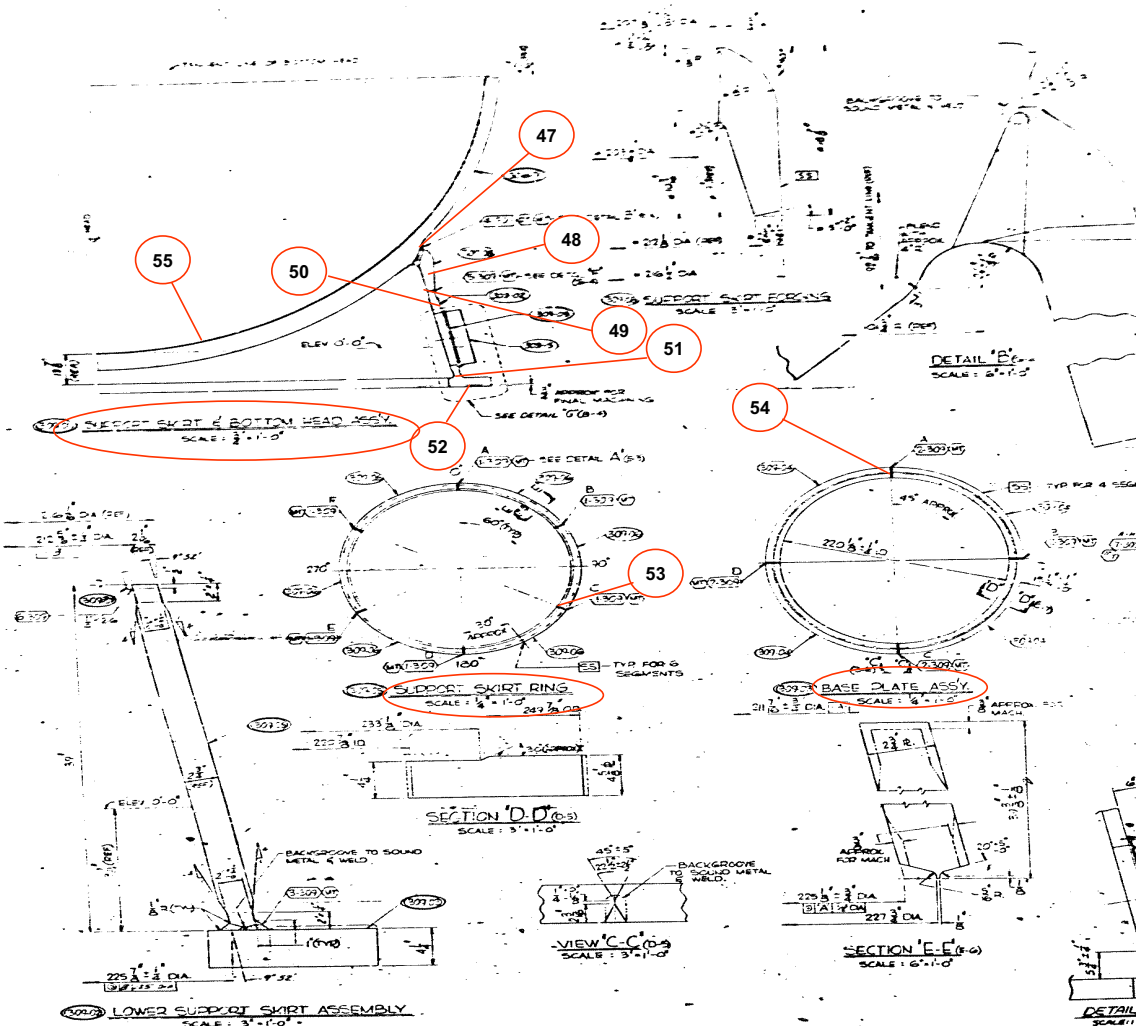

# GROUP 4 – REACTOR VESSEL INTERNALS
## SHROUD (Sheet 1 of 8)
## (Covers Worksheets RCS-SHROUD – 1 thru 47)

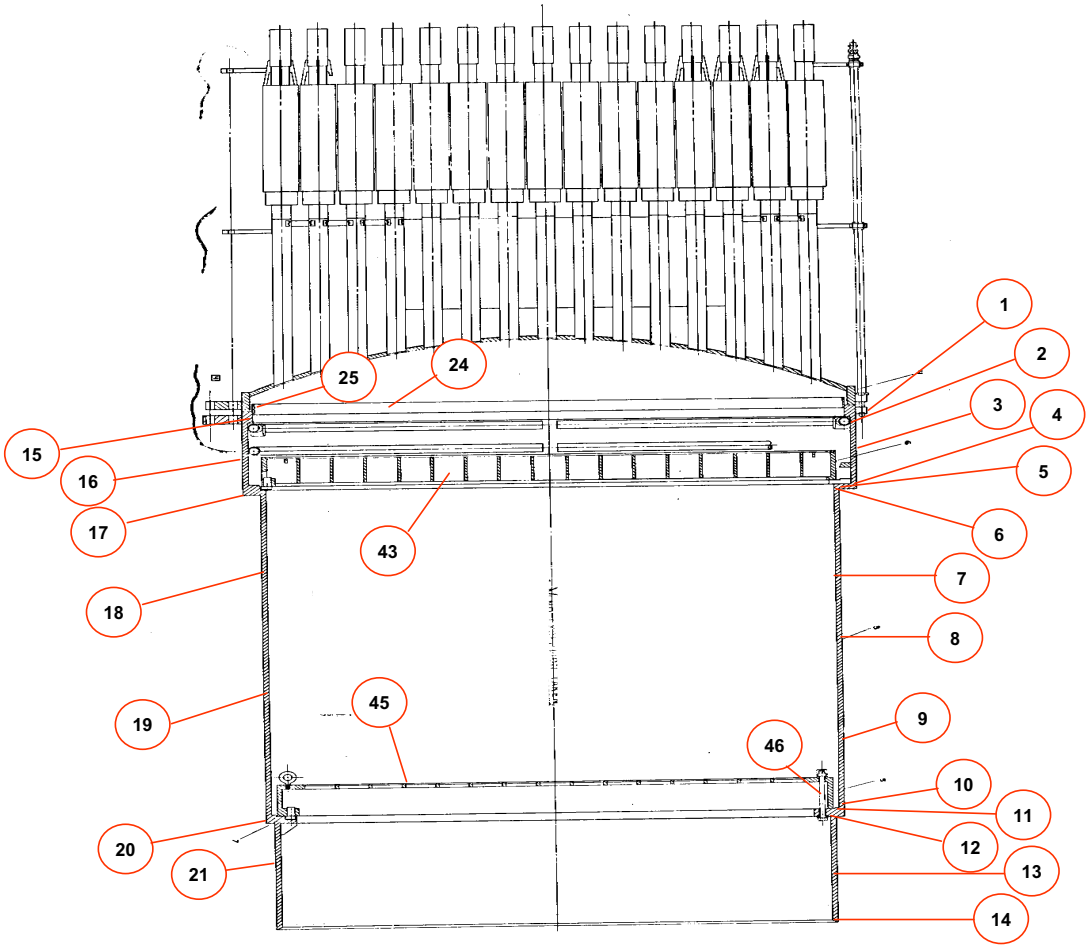

# GROUP 4 – REACTOR VESSEL INTERNALS
# SHROUD (Sheet 2 of 8)
# (Covers Worksheets RCS-SHROUD – 1 thru 47)

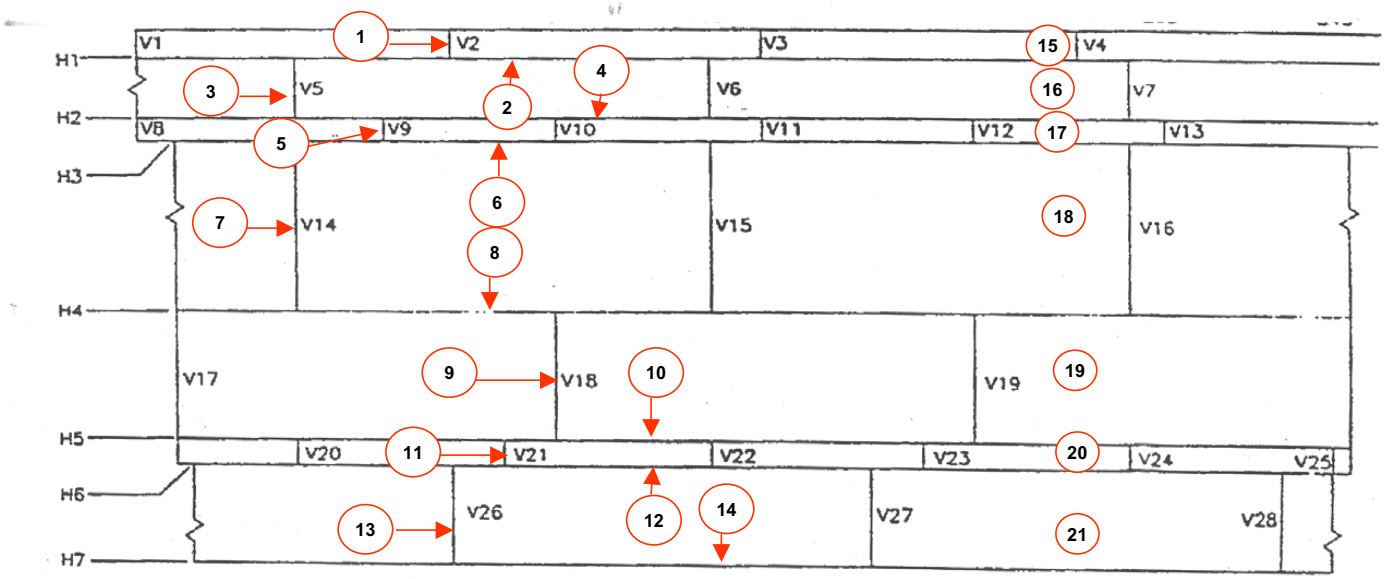


**RPV SHROUD WELD/PLATE IDENTIFICATION**

**ELEVATION VIEW**

# GROUP 4 – REACTOR VESSEL INTERNALS
## SHROUD (Sheet 3 of 8)
## (Covers Worksheets RCS-SHROUD – 1 thru 47)

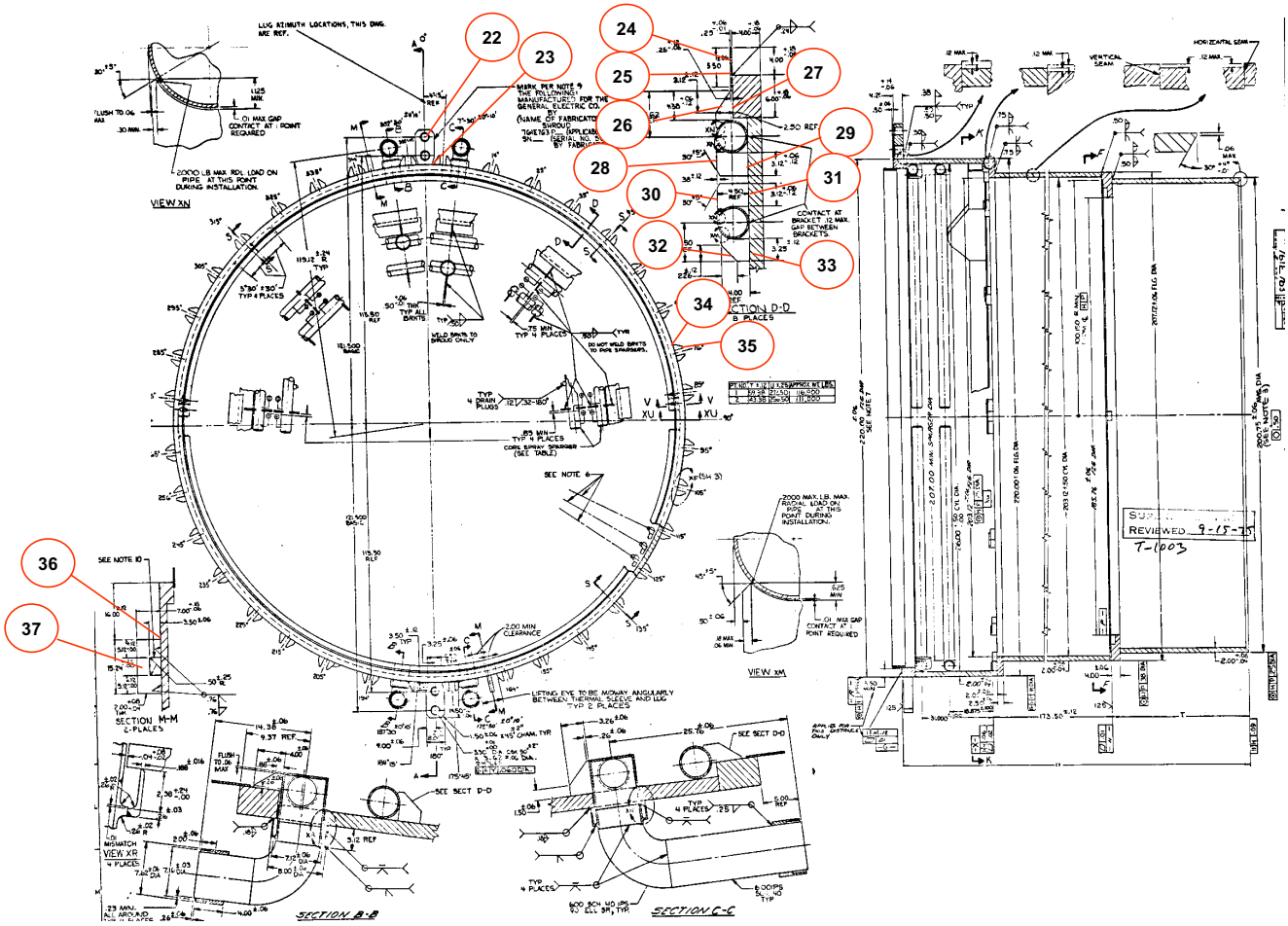

# GROUP 4 – REACTOR VESSEL INTERNALS
# SHROUD (Sheet 4 of 8)
# (Covers Worksheets RCS-SHROUD – 1 thru 47)

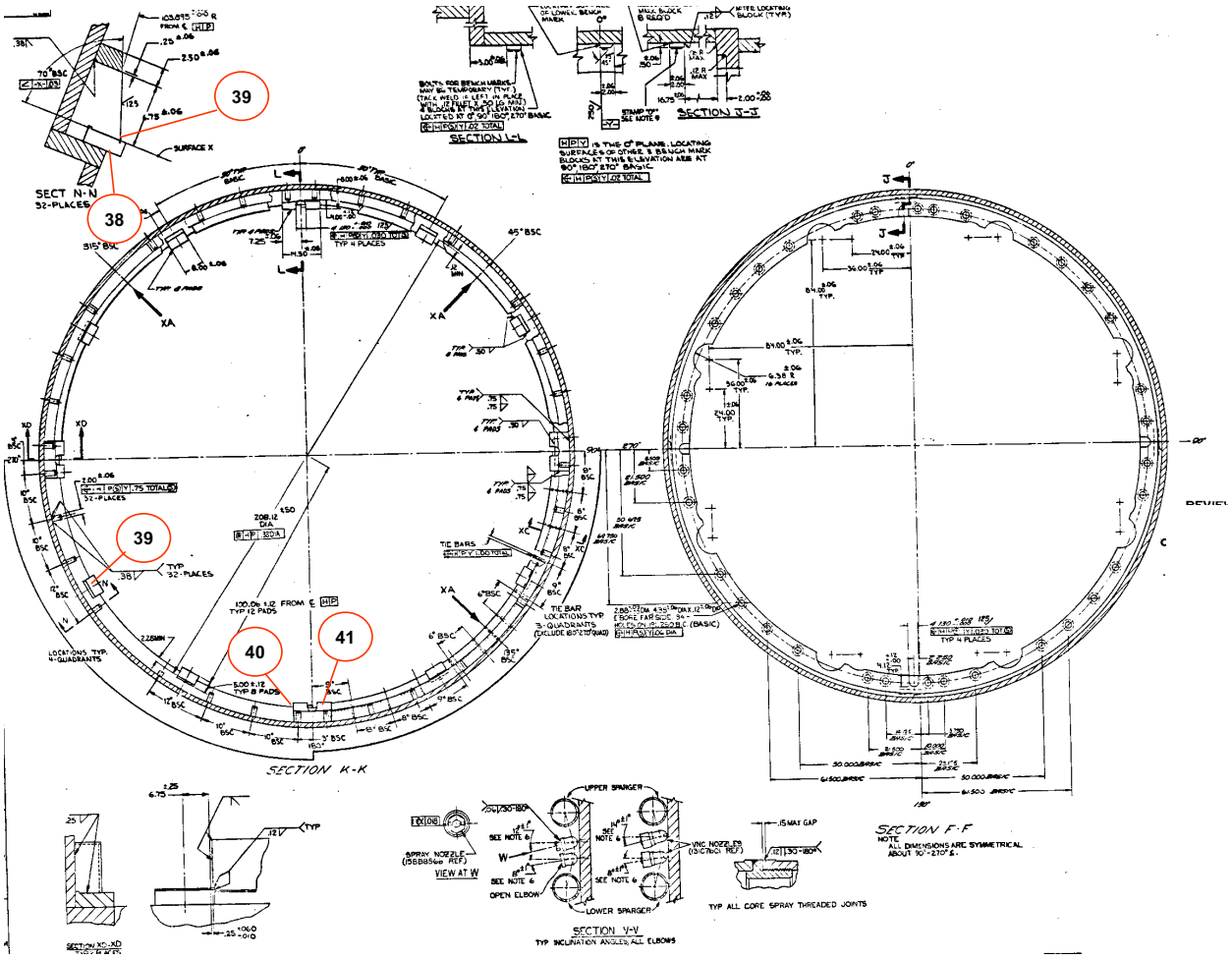

# GROUP 4 – REACTOR VESSEL INTERNALS SHROUD (Sheet 5 of 8) (Covers Worksheets RCS-SHROUD – 1 thru 47)

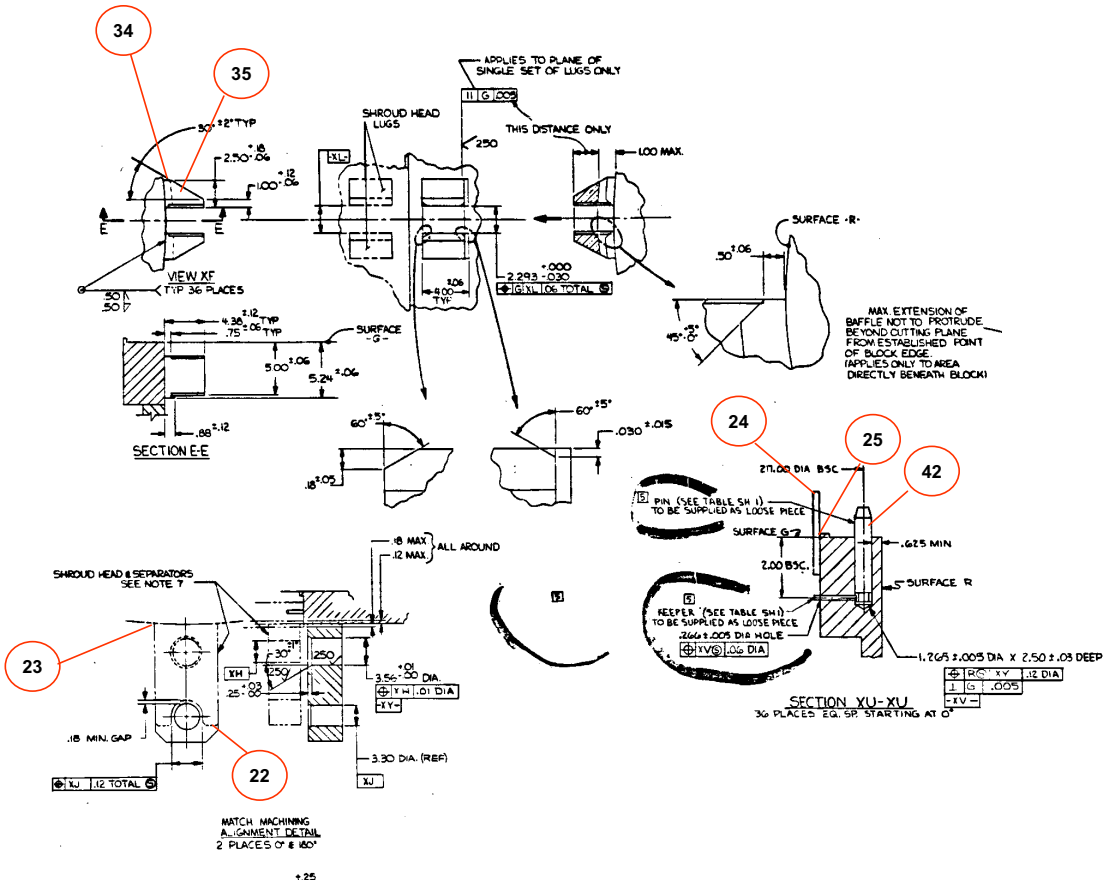

# GROUP 4 – REACTOR VESSEL INTERNALS
## SHROUD (Sheet 6 of 8)
## (Covers Worksheets RCS-SHROUD – 1 thru 47)

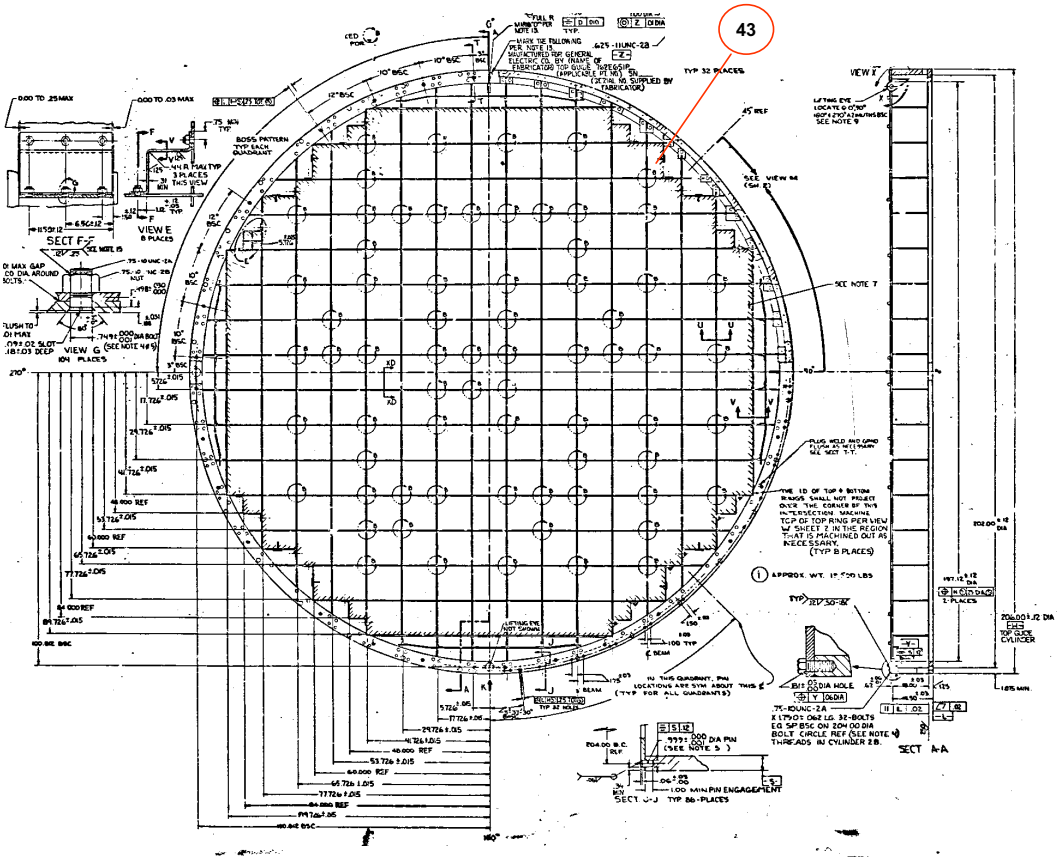


TOP GUIDE

# GROUP 4 – REACTOR VESSEL INTERNALS SHROUD (Sheet 7 of 8)
# (Covers Worksheets RCS-SHROUD – 1 thru 47)

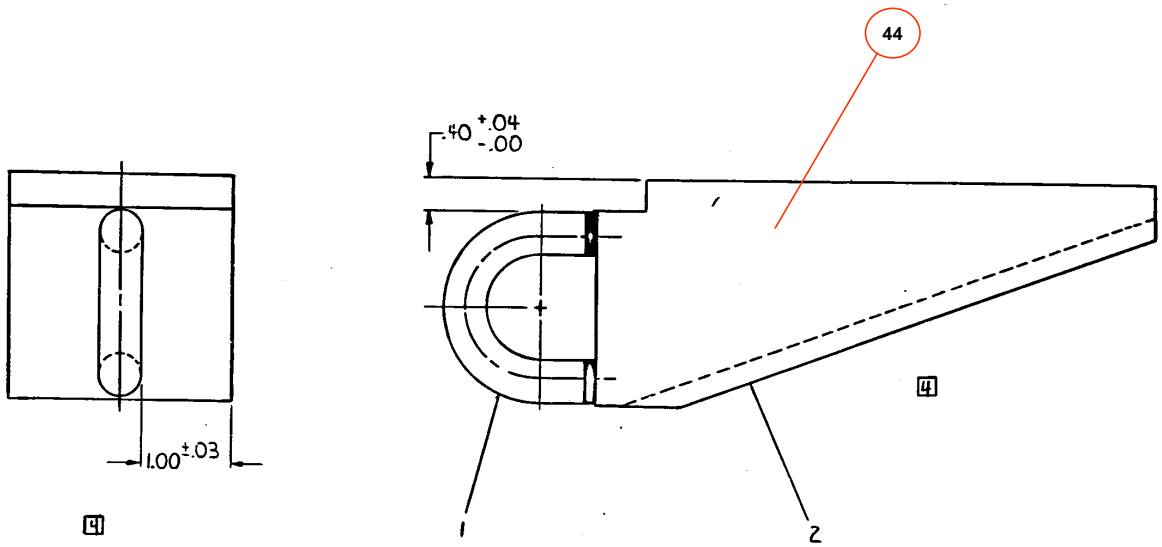

# GROUP 4 – REACTOR VESSEL INTERNALS
## SHROUD (Sheet 8 of 8)
## (Covers Worksheets RCS-SHROUD – 1 thru 47)

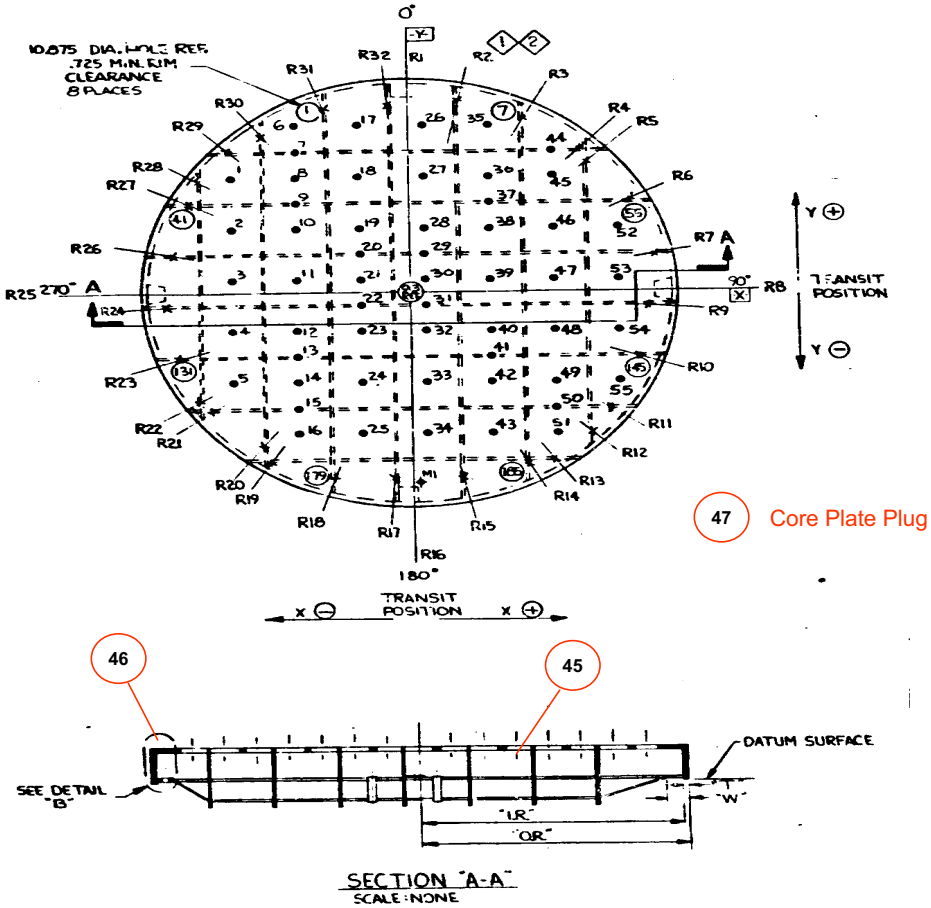





**CORE PLATE**

# GROUP 5 – REACTOR VESSEL INTERNALS
# CORE CONTROLS (Sheet 1 of 15)
# (Covers Worksheets RCS-CORECTRL – 1 thru 42)

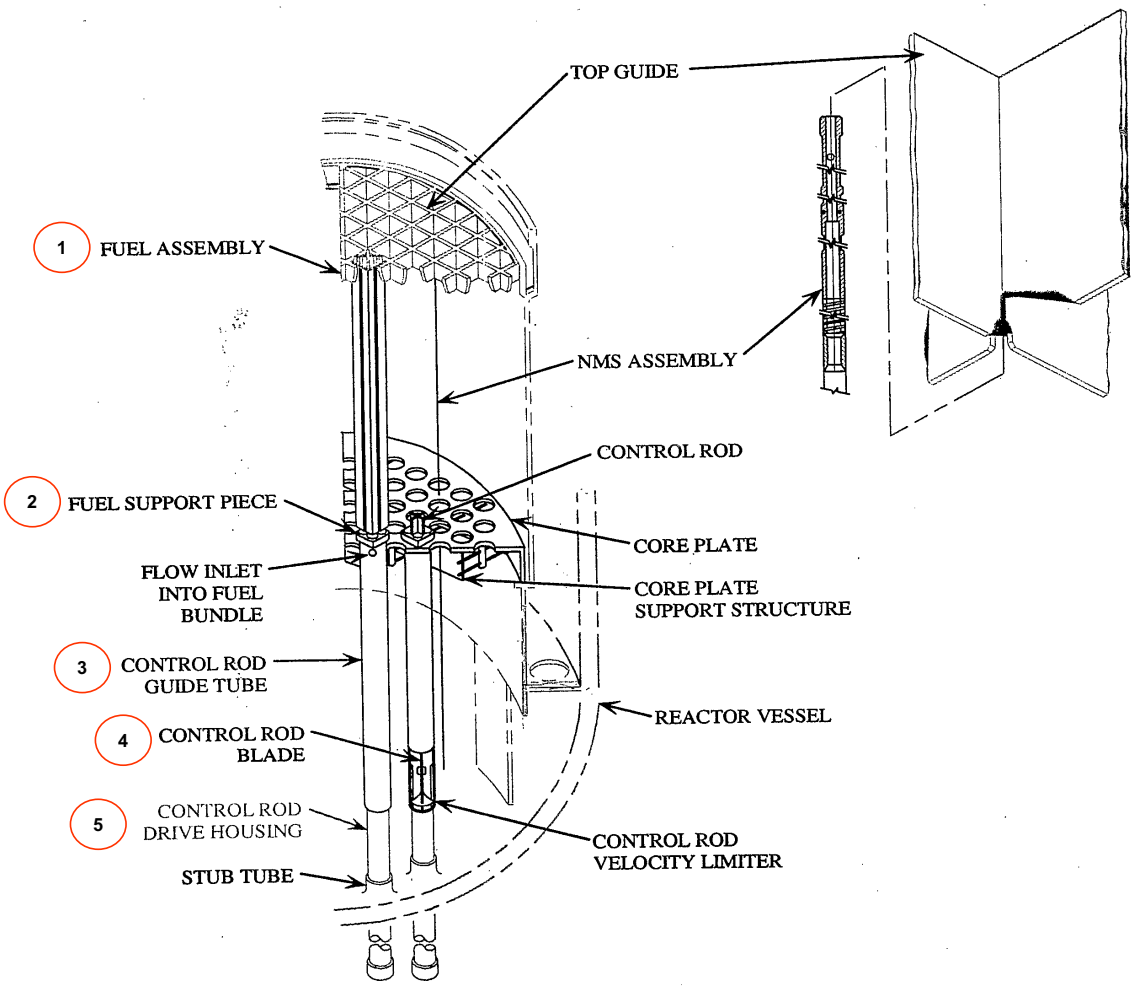


**RPV CORE AREA INTERNALS**

# GROUP 5 – REACTOR VESSEL INTERNALS
# CORE CONTROLS (Sheet 2 of 15)
# (Covers Worksheets RCS-CORECTRL – 1 thru 42)

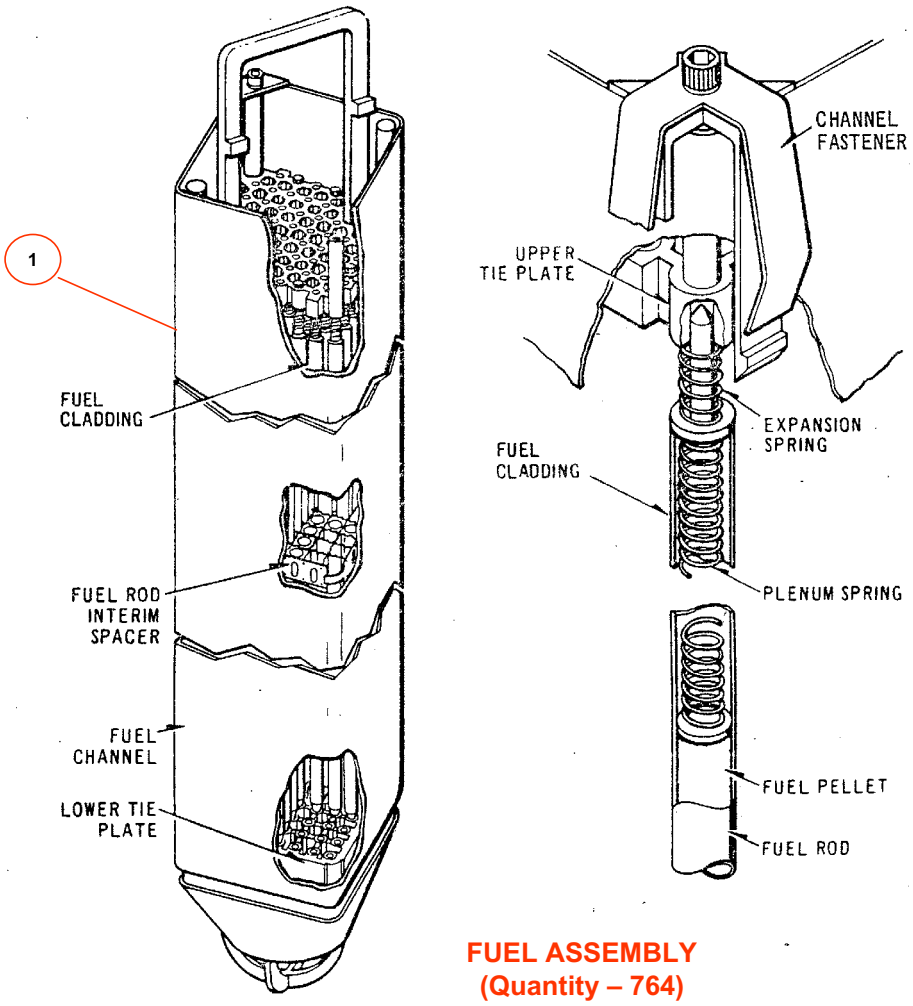


**FUEL ASSEMBLY**
**(Quantity – 764)**

# GROUP 5 – REACTOR VESSEL INTERNALS
# CORE CONTROLS (Sheet 3 of 15)
# (Covers Worksheets RCS-CORECTRL – 1 thru 42)

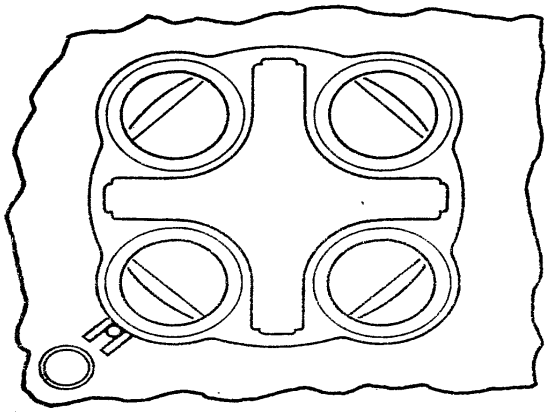

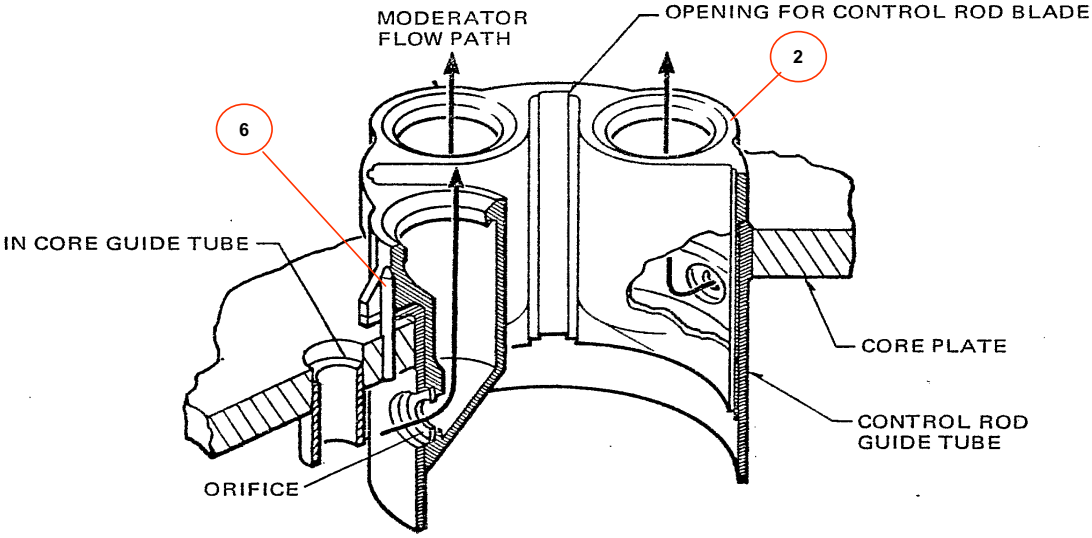


**ORIFICED FUEL SUPPORT ASSEMBLY**

# GROUP 5 – REACTOR VESSEL INTERNALS
# CORE CONTROLS (Sheet 4 of 15)
# (Covers Worksheets RCS-CORECTRL – 1 thru 42)

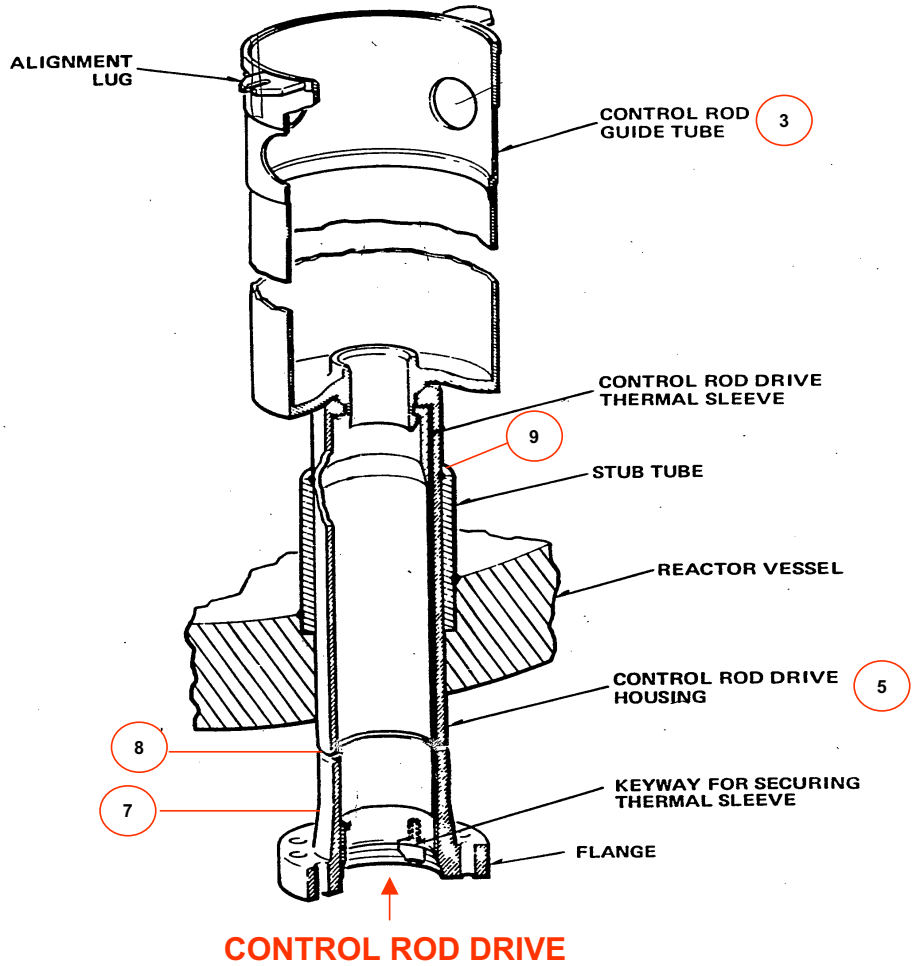

# GROUP 5 – REACTOR VESSEL INTERNALS
# CORE CONTROLS (Sheet 5 of 15)
# (Covers Worksheets RCS-CORECTRL – 1 thru 42)

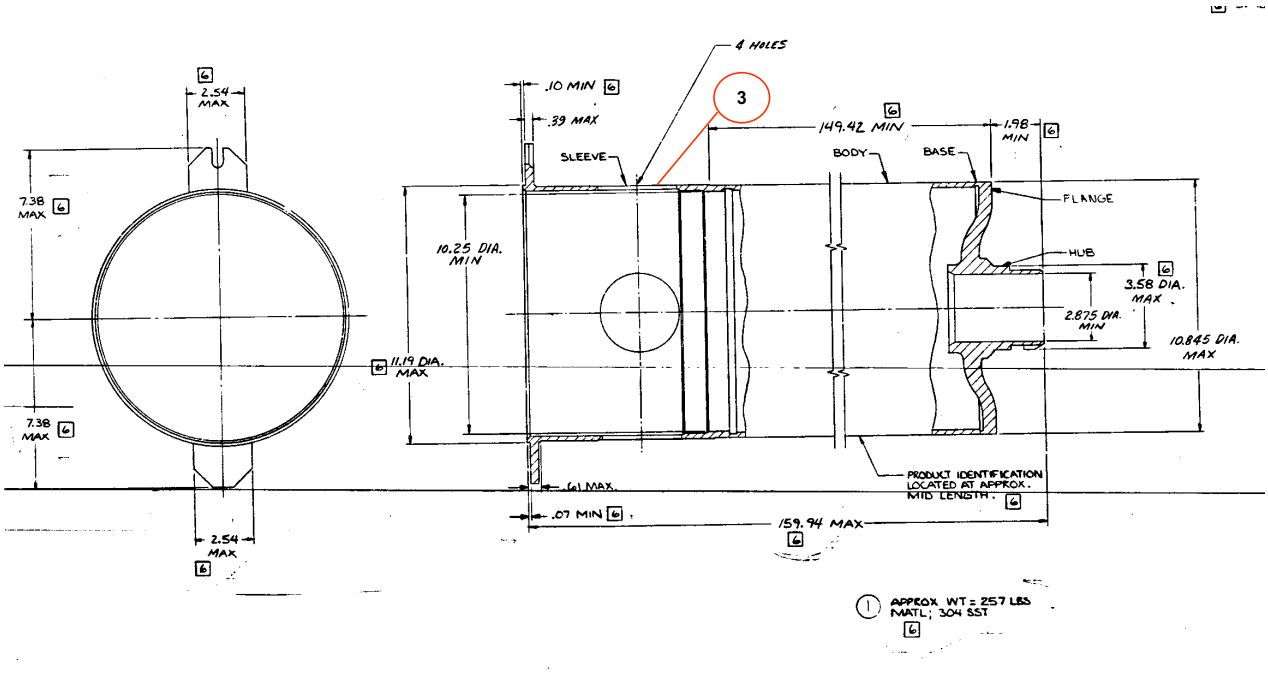


**CONTROL ROD GUIDE TUBE**

# GROUP 5 – REACTOR VESSEL INTERNALS
# CORE CONTROLS (Sheet 6 of 15)
# (Covers Worksheets RCS-CORECTRL – 1 thru 42)

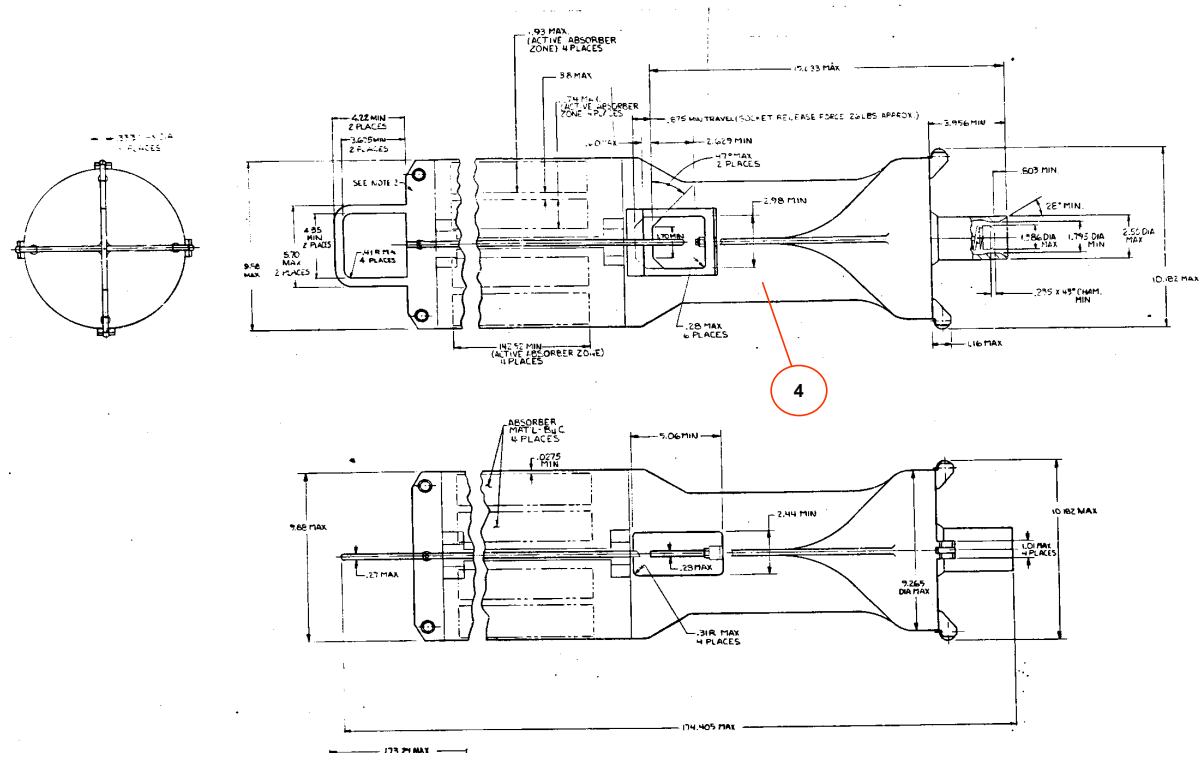


**CONTROL ROD**
**(QUANTITY – 185)**

# GROUP 5 – REACTOR VESSEL INTERNALS
# CORE CONTROLS (Sheet 7 of 15)
# (Covers Worksheets RCS-CORECTRL – 1 thru 42)

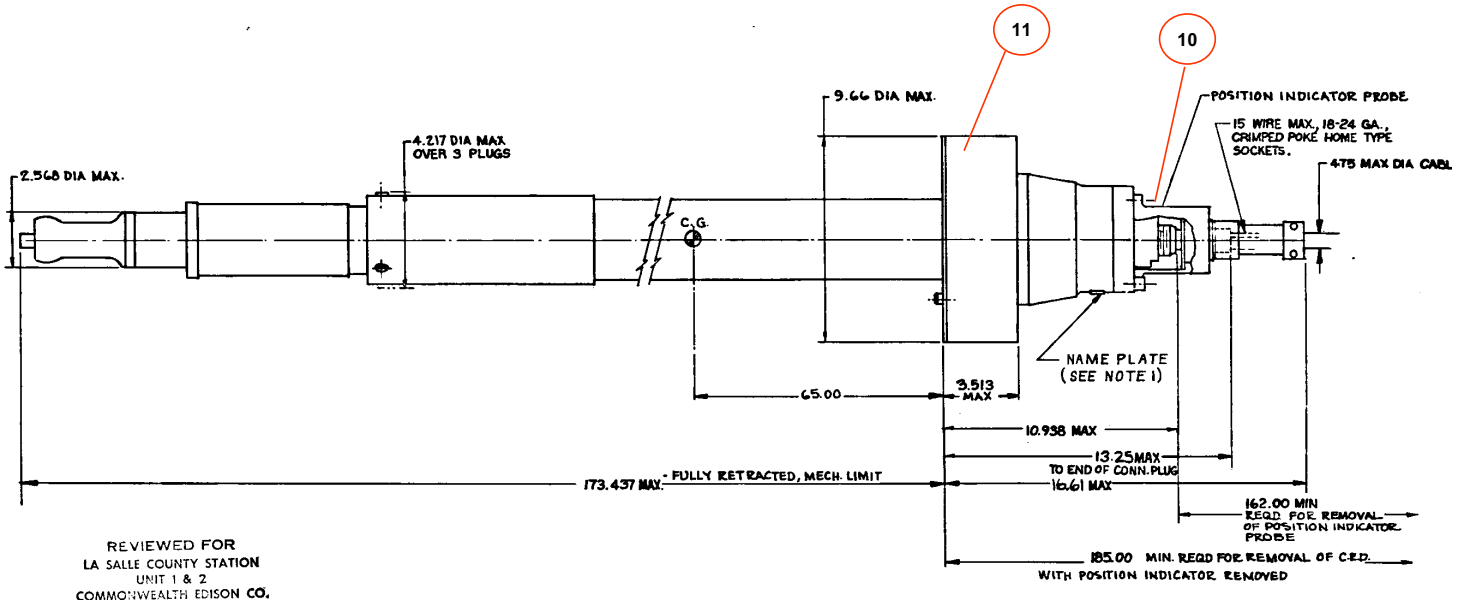


CONTROL ROD DRIVE

# GROUP 5 – REACTOR VESSEL INTERNALS
# CORE CONTROLS (Sheet 8 of 15)
# (Covers Worksheets RCS-CORECTRL – 1 thru 42)

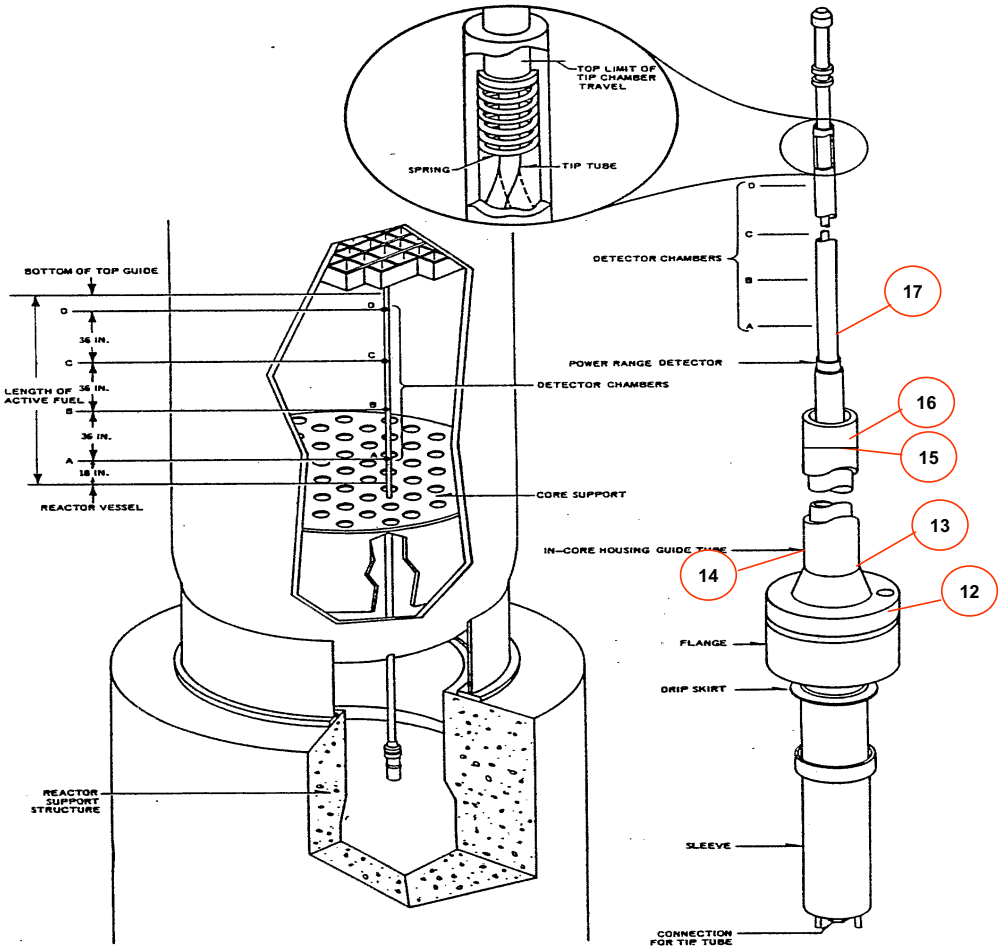


**NEUTRON MONITORING IN-CORE SYSTEM**

# GROUP 5 – REACTOR VESSEL INTERNALS
# CORE CONTROLS (Sheet 9 of 15)
# (Covers Worksheets RCS-CORECTRL – 1 thru 42)

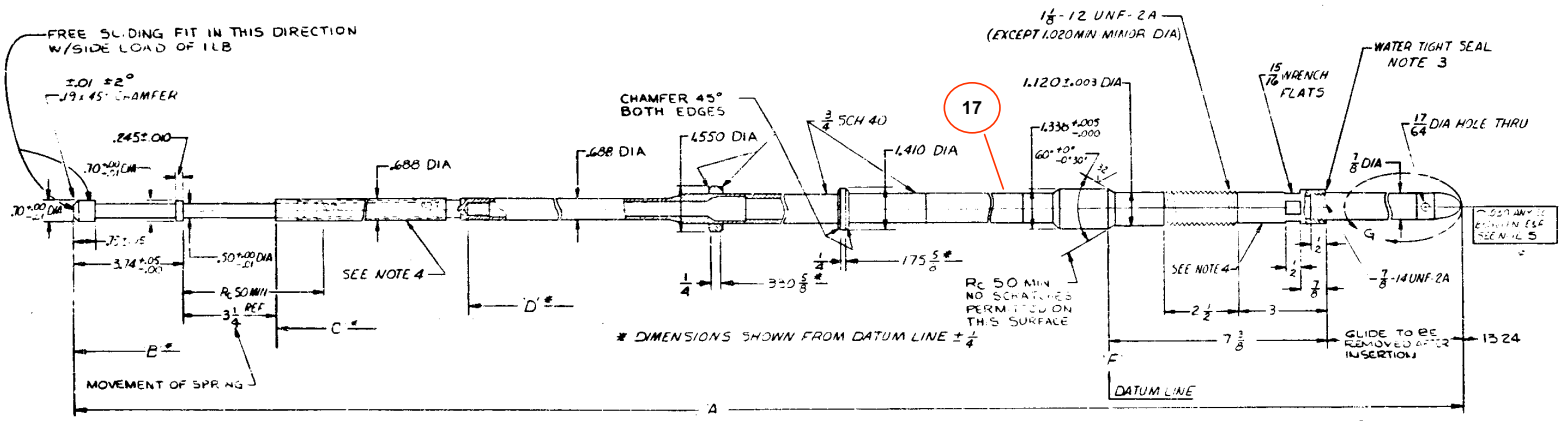


| PT. NO. | A | B | C | D | VENDOR | VENDOR IDENT NO |
|---|---|---|---|---|---|---|
| 1 | 514.06 | 493.44 | 486.44 | 475.50 | [illegible] | 886D380G6 |

**DRY TUBE ASSEMBLY**
**NEUTRON MONITORING SYSTEM**

# GROUP 5 – REACTOR VESSEL INTERNALS
## CORE CONTROLS (Sheet 10 of 15)
## (Covers Worksheets RCS-CORECTRL – 1 thru 42)

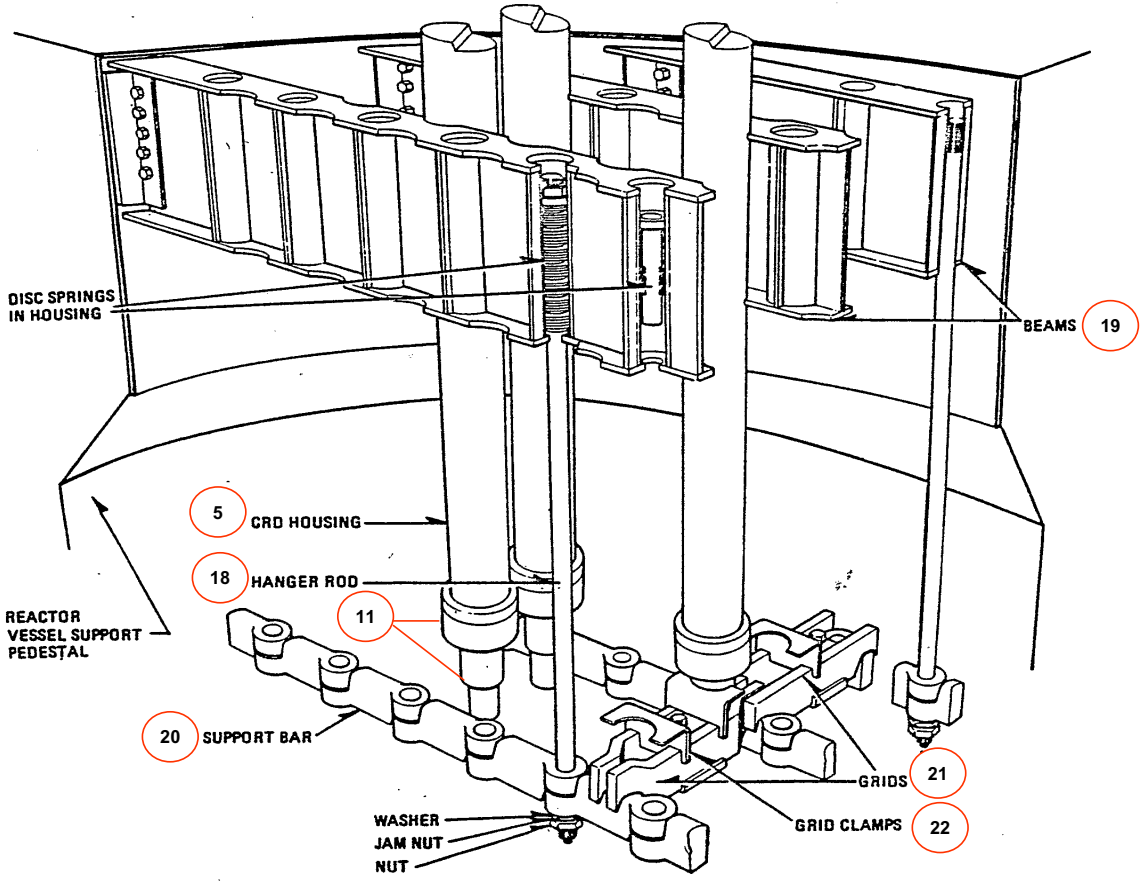


**CONTROL ROD DRIVE HOUSING SUPPORT ASSEMBLY**

# GROUP 5 – REACTOR VESSEL INTERNALS
# CORE CONTROLS (Sheet 11 of 15)
# (Covers Worksheets RCS-CORECTRL – 1 thru 42)

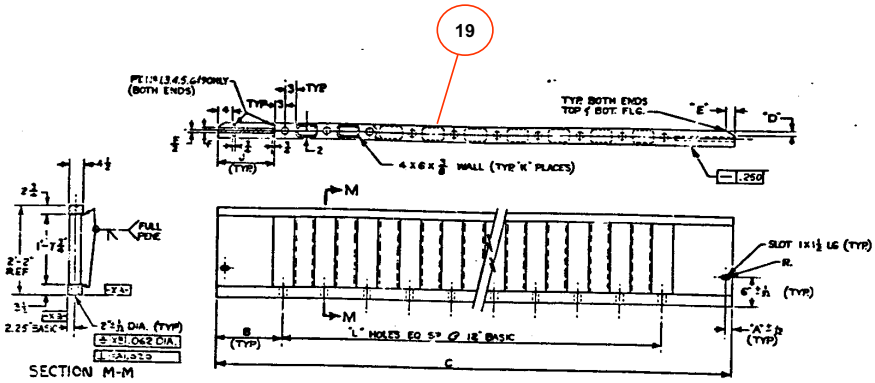


BEAM

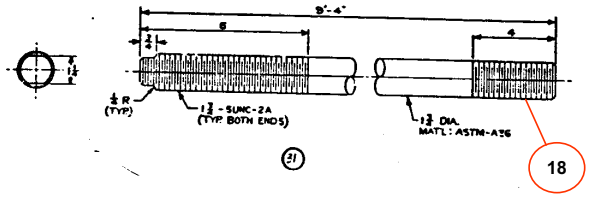


HANGER ROD

# GROUP 5 – REACTOR VESSEL INTERNALS
## CORE CONTROLS (Sheet 12 of 15)
## (Covers Worksheets RCS-CORECTRL – 1 thru 42)

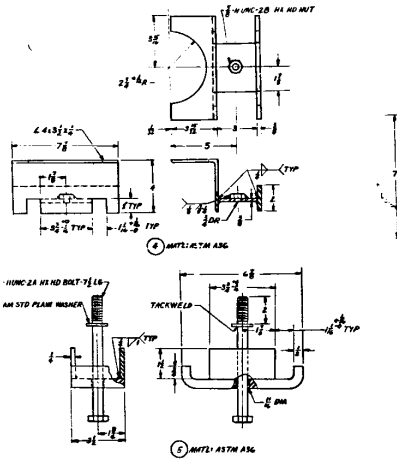

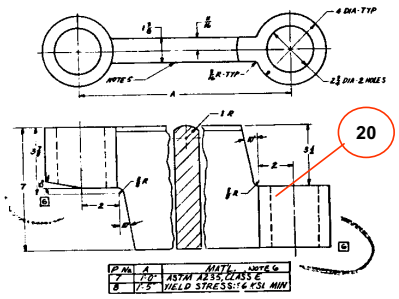


SUPPORT BAR

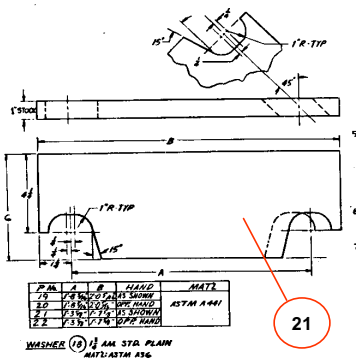


GRID

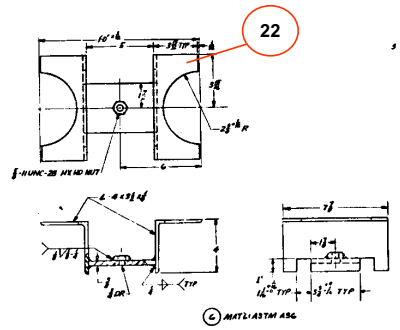


GRID CLAMP

# GROUP 5 – REACTOR VESSEL INTERNALS
## CORE CONTROLS (Sheet 13 of 15)
## (Covers Worksheets RCS-CORECTRL – 1 thru 42)

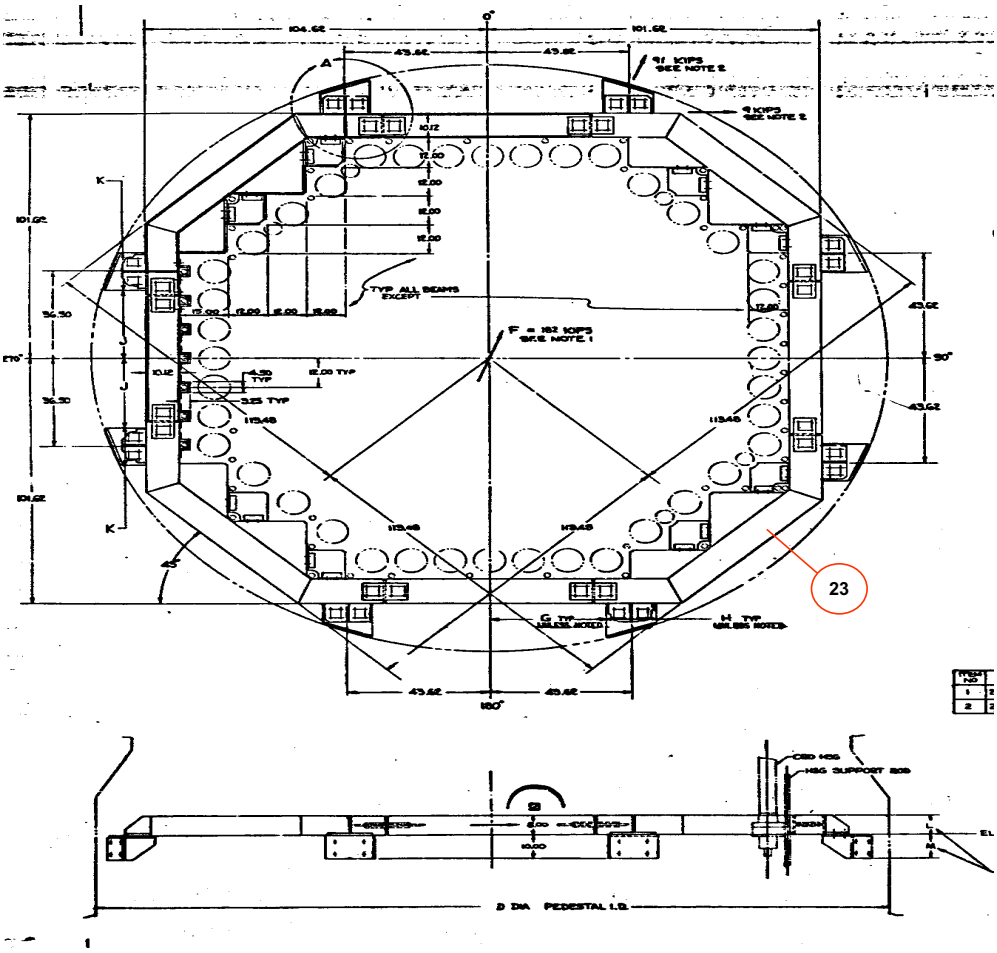


**CONTROL ROD-DRIVE HOUSING RESTRAINT BEAM**

# GROUP 5 – REACTOR VESSEL INTERNALS
# CORE CONTROLS (Sheet 14 of 15)
# (Covers Worksheets RCS-CORECTRL – 1 thru 42)

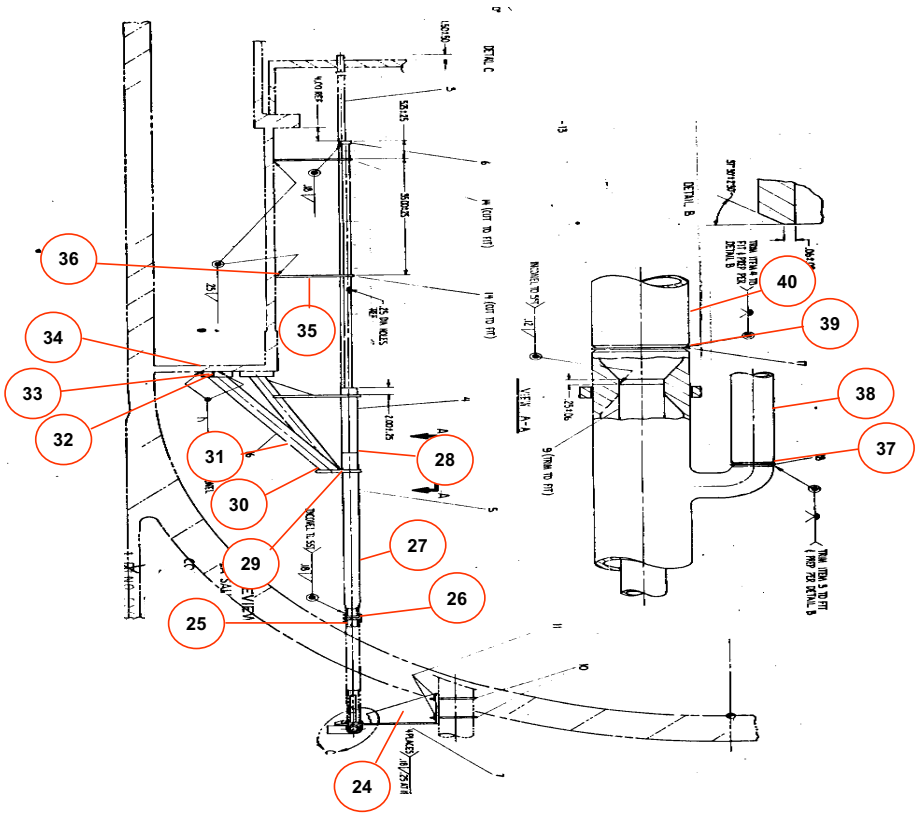


**DIFFERENTIAL PRESURE AND LIQUID CONTROL LINE**

# GROUP 5 – REACTOR VESSEL INTERNALS
# CORE CONTROLS (Sheet 15 of 15)
# (Covers Worksheets RCS-CORECTRL – 1 thru 42)

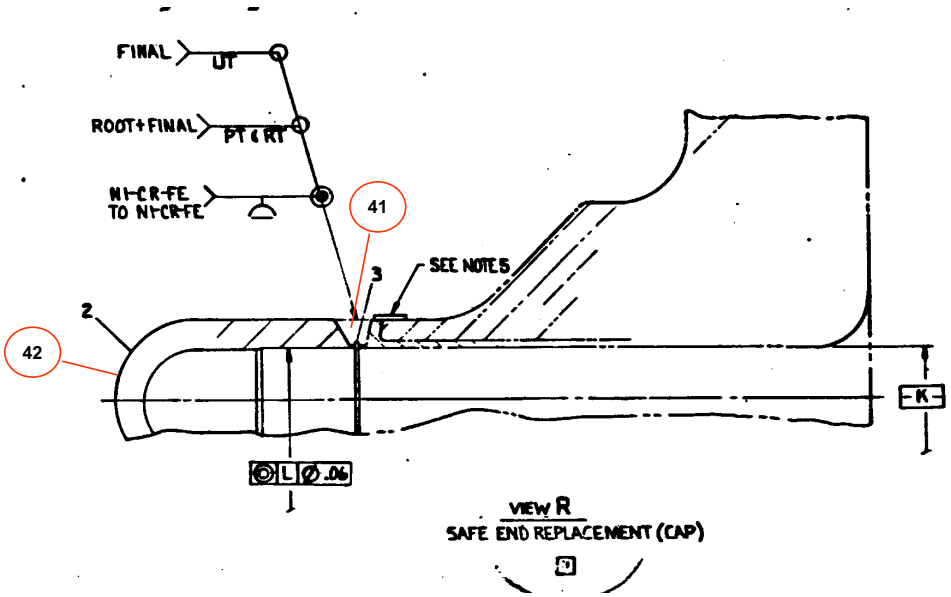


**CRD HYDRAULIC SYSTEM RETURN**
**(CAPPED)**

# GROUP 6 – REACTOR VESSEL INTERNALS
# JET PUMP ASSEMBLY (Sheet 1 of 6)
# (Covers Worksheets RCS-JETPUMP – 1 thru 22)

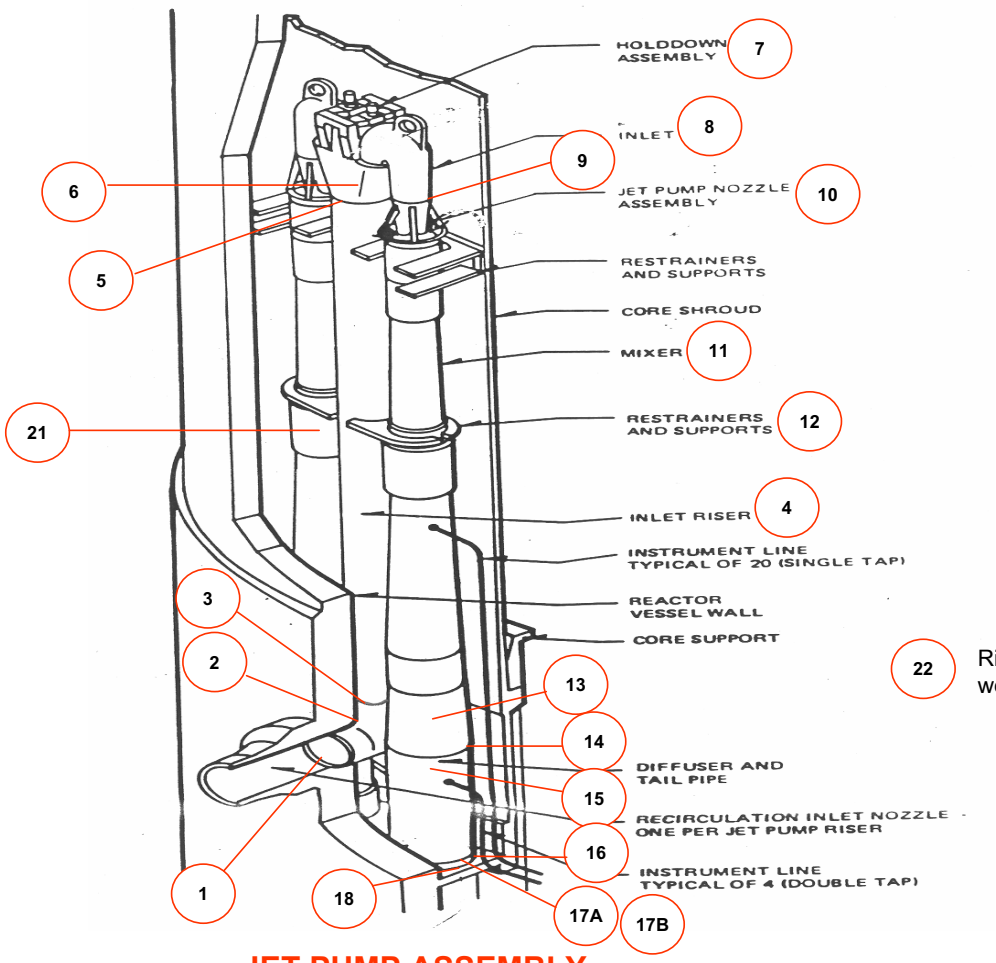


22 Riser bracket to Riser weld

**JET PUMP ASSEMBLY**
**(QUANTITY 10)**

# GROUP 6 – REACTOR VESSEL INTERNALS
# JET PUMP ASSEMBLY (Sheet 2 of 6)
# (Covers Worksheets RCS-JETPUMP – 1 thru 22)

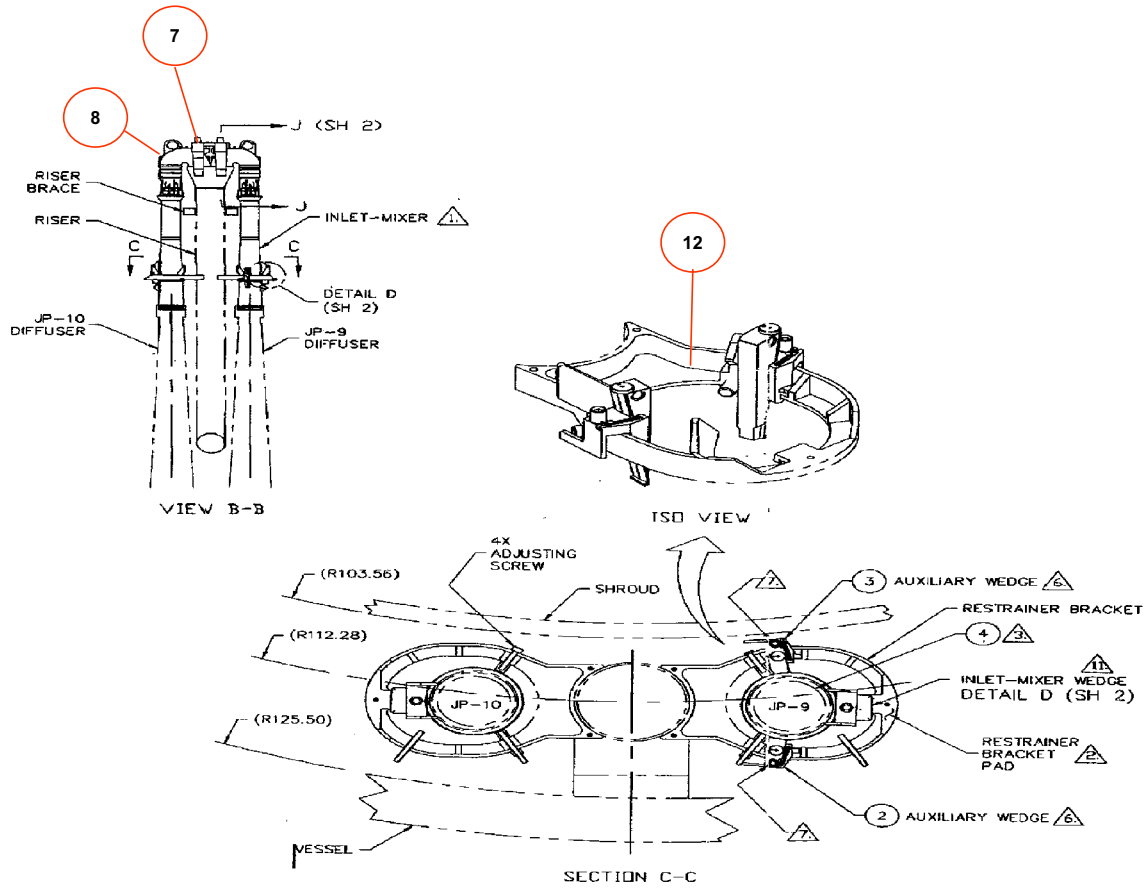

# GROUP 6 – REACTOR VESSEL INTERNALS
# JET PUMP ASSEMBLY (Sheet 3 of 6)
# (Covers Worksheets RCS-JETPUMP – 1 thru 22)

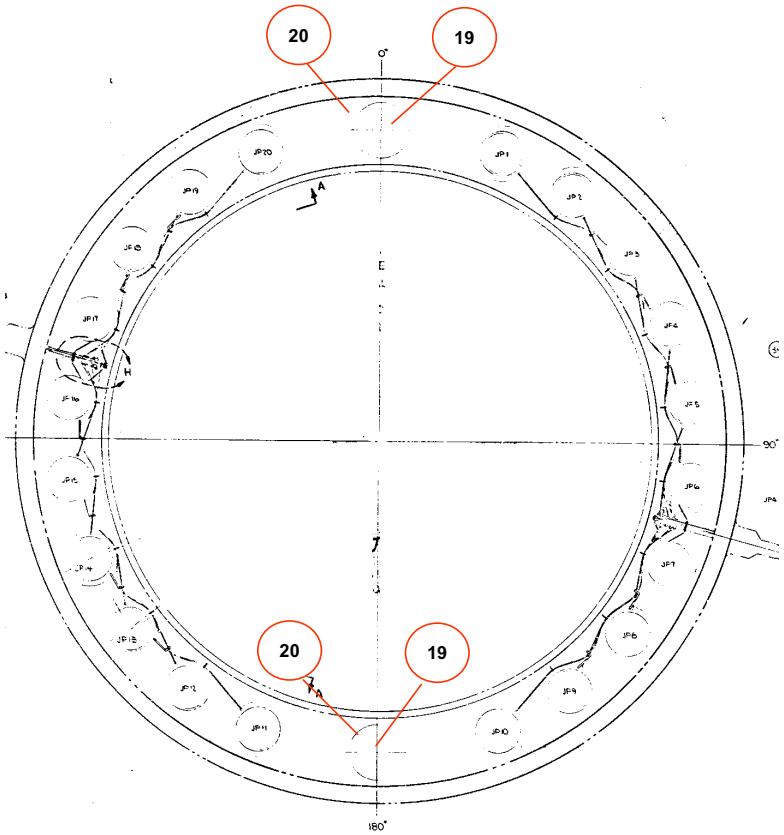


**SHROUD SUPPORT PLATE**
**PLAN VIEW**

# GROUP 6 – REACTOR VESSEL INTERNALS
# JET PUMP ASSEMBLY (Sheet 4 of 6)
# (Covers Worksheets RCS-JETPUMP – 1 thru 22)

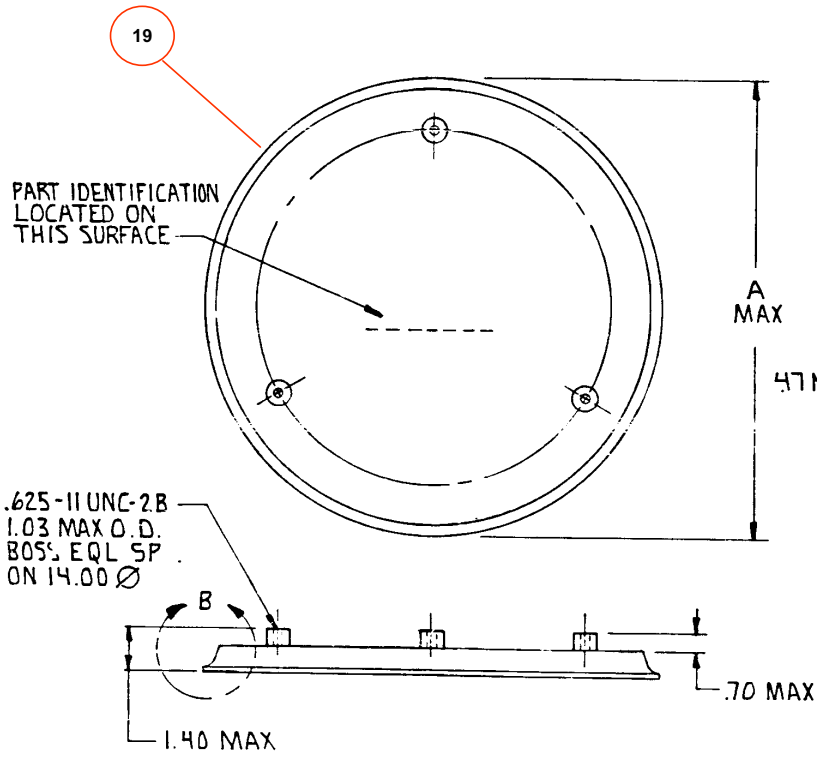


**JET PUMP ACCESS HOLE COVER**

# GROUP 6 – REACTOR VESSEL INTERNALS
# JET PUMP ASSEMBLY (Sheet 5 of 6)
# (Covers Worksheets RCS-JETPUMP – 1 thru 22)

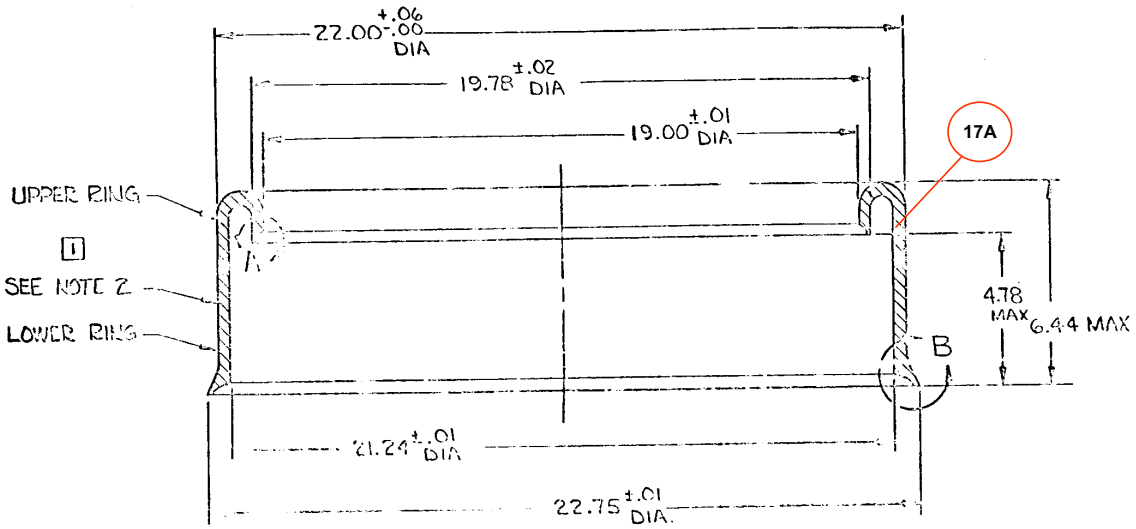


(1) APPROX WT 45 LBS

**JET PUMP ADAPTER**
**(UNIT 1)**

# GROUP 6 – REACTOR VESSEL INTERNALS
# JET PUMP ASSEMBLY (Sheet 6 of 6)
# (Covers Worksheets RCS-JETPUMP – 1 thru 22)

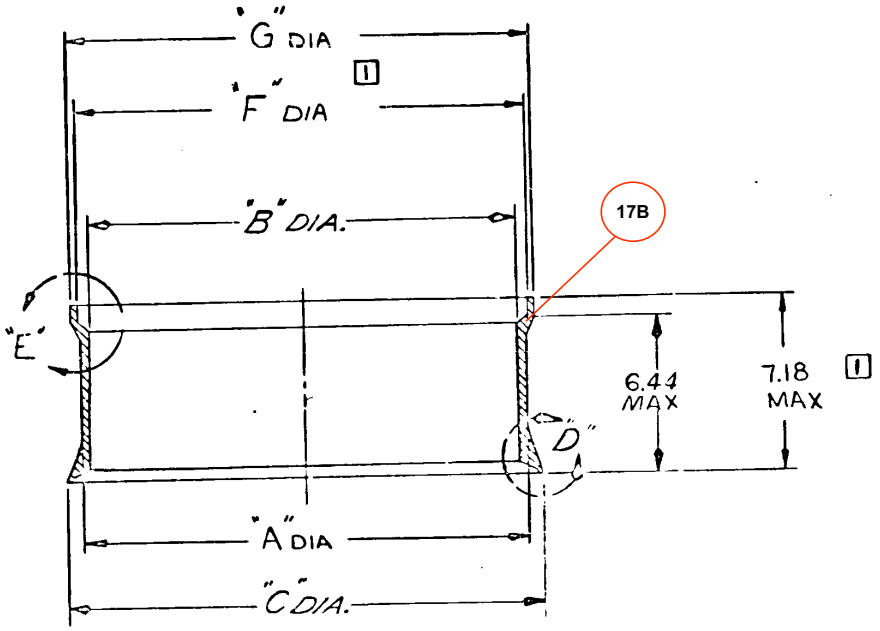


**JET PUMP ADAPTER**
**(UNIT 2)**

# GROUP 7 – REACTOR VESSEL INTERNALS
# ECCS CONNECTIONS (Sheet 1 of 8 )
# (Covers Worksheets RCS-ECCSCONN – 1 thru 50)

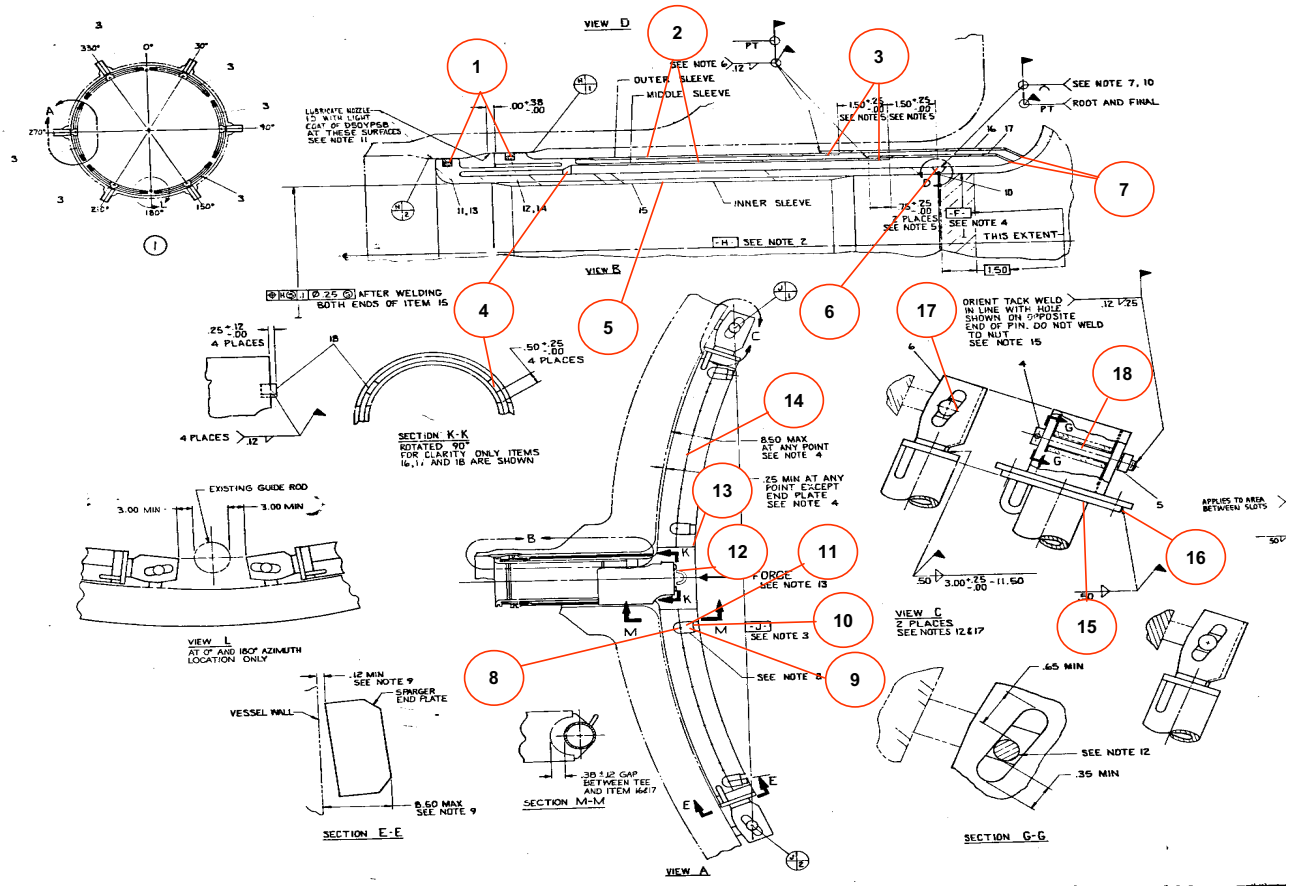


**FEEDWATER SPARGER**
**(QUANTITY 6)**

# GROUP 7 – REACTOR VESSEL INTERNALS
# ECCS CONNECTIONS (Sheet 2 of 8 )
# (Covers Worksheets RCS-ECCSCONN – 1 thru 50)

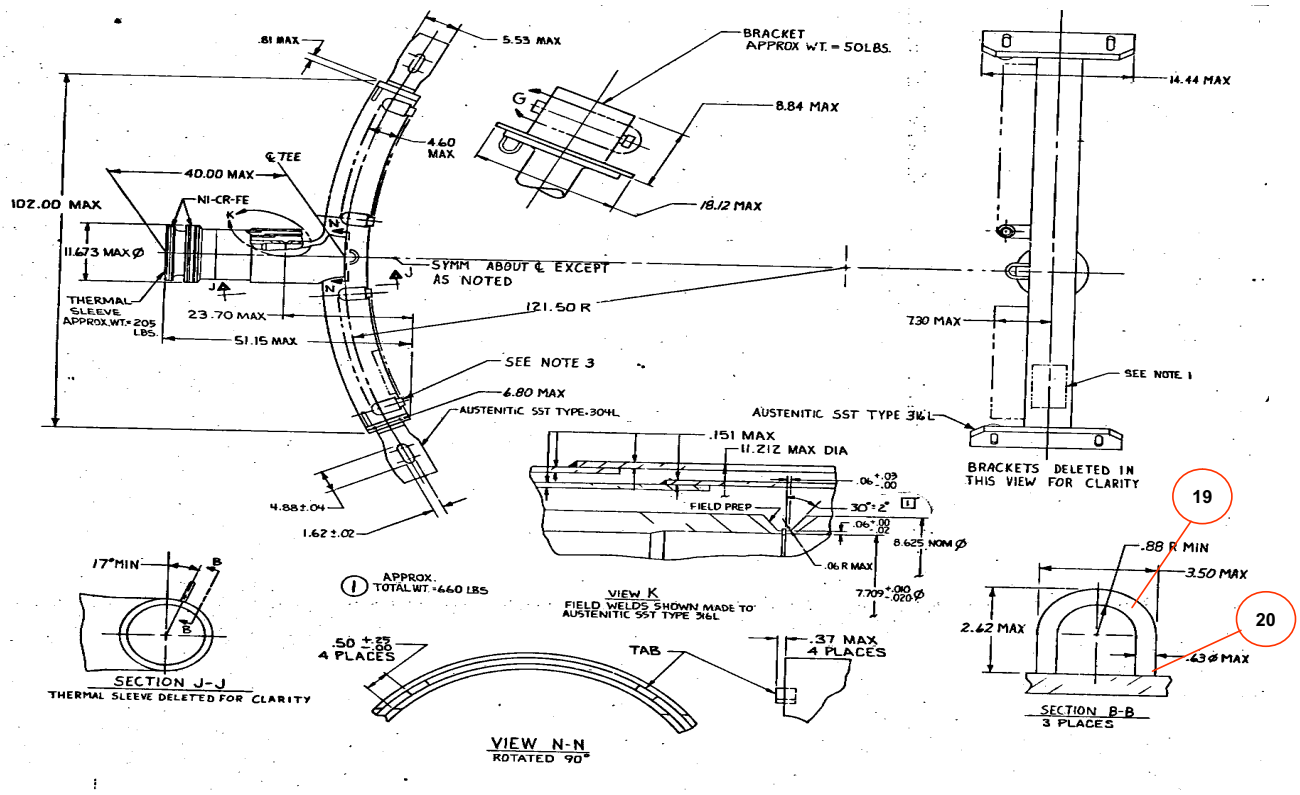


**FEEDWATER SPARGER**

# GROUP 7 – REACTOR VESSEL INTERNALS
## ECCS CONNECTIONS (Sheet 3 of 8 )
## (Covers Worksheets RCS-ECCSCONN – 1 thru 50)

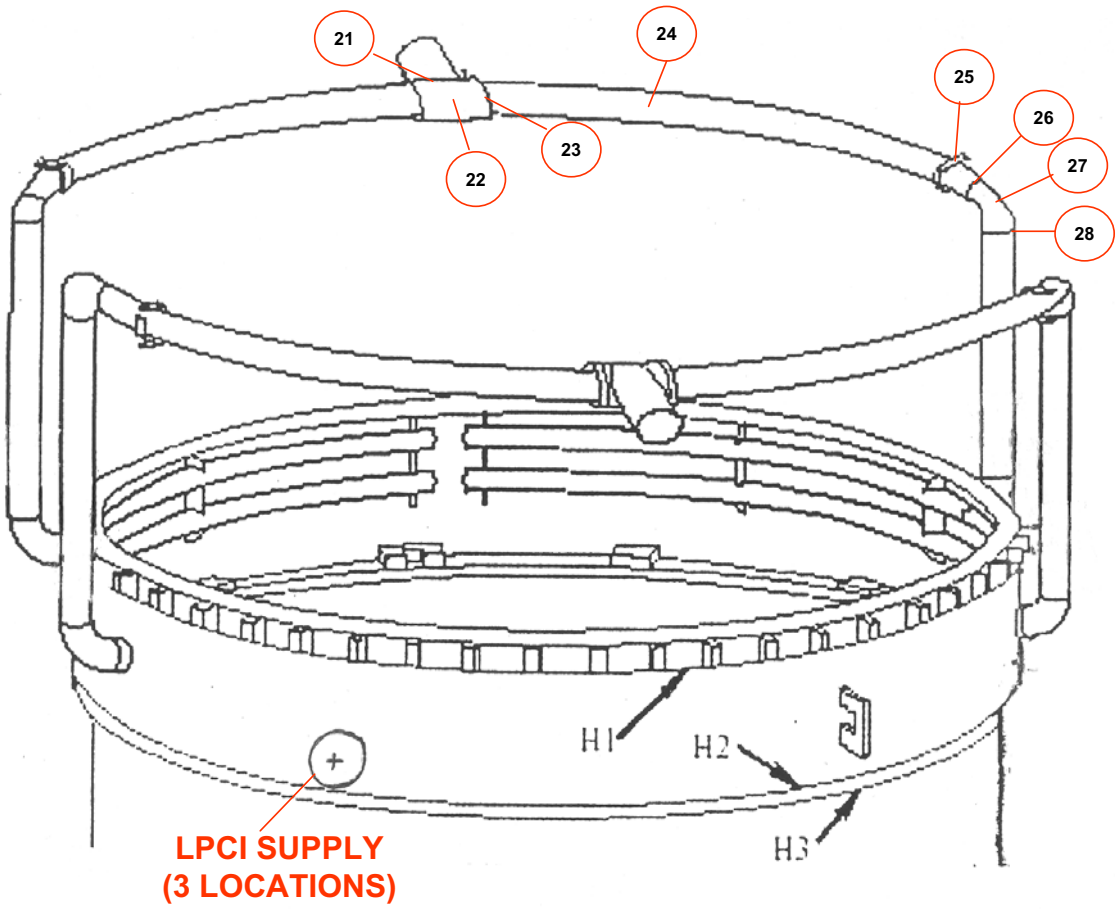


CORE SPRAY PIPING INSIDE VESSEL

# GROUP 7 – REACTOR VESSEL INTERNALS
## ECCS CONNECTIONS (Sheet 4 of 8 )
## (Covers Worksheets RCS-ECCSCONN – 1 thru 50)

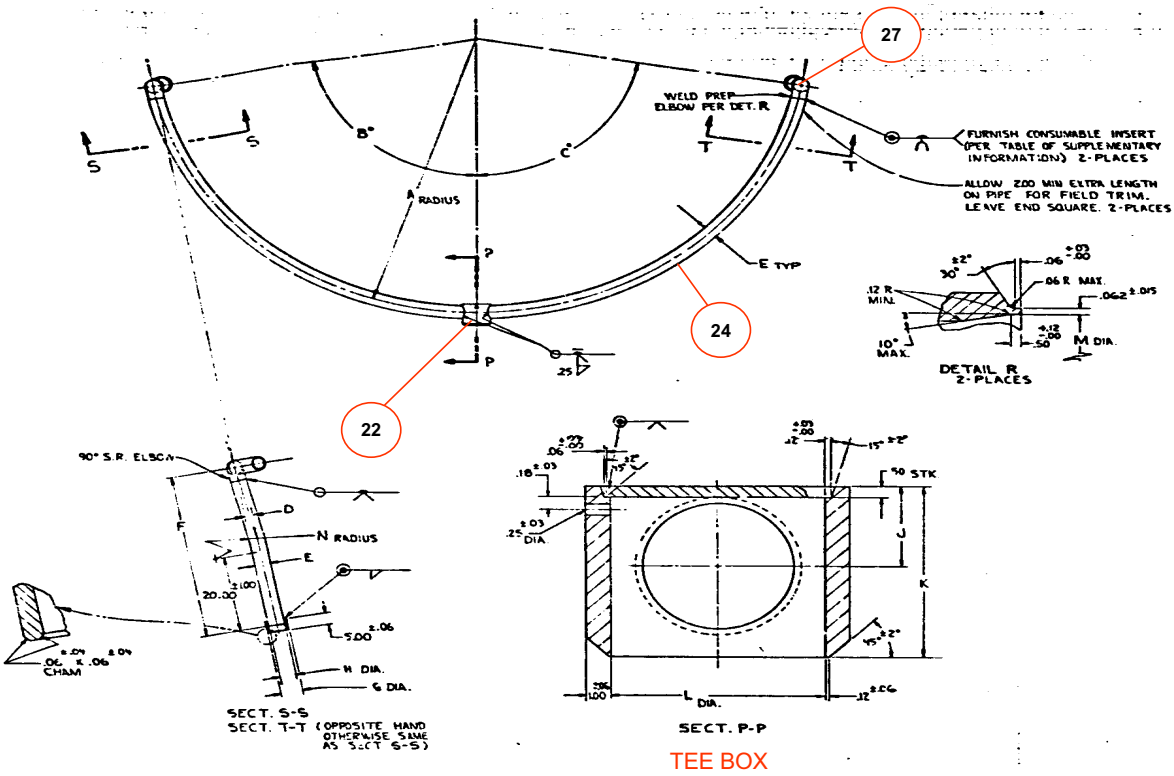


**CORE SPRAY LINE**
**(Quantity 2)**

# GROUP 7 – REACTOR VESSEL INTERNALS
# ECCS CONNECTIONS (Sheet 5 of 8 )
# (Covers Worksheets RCS-ECCSCONN – 1 thru 50)

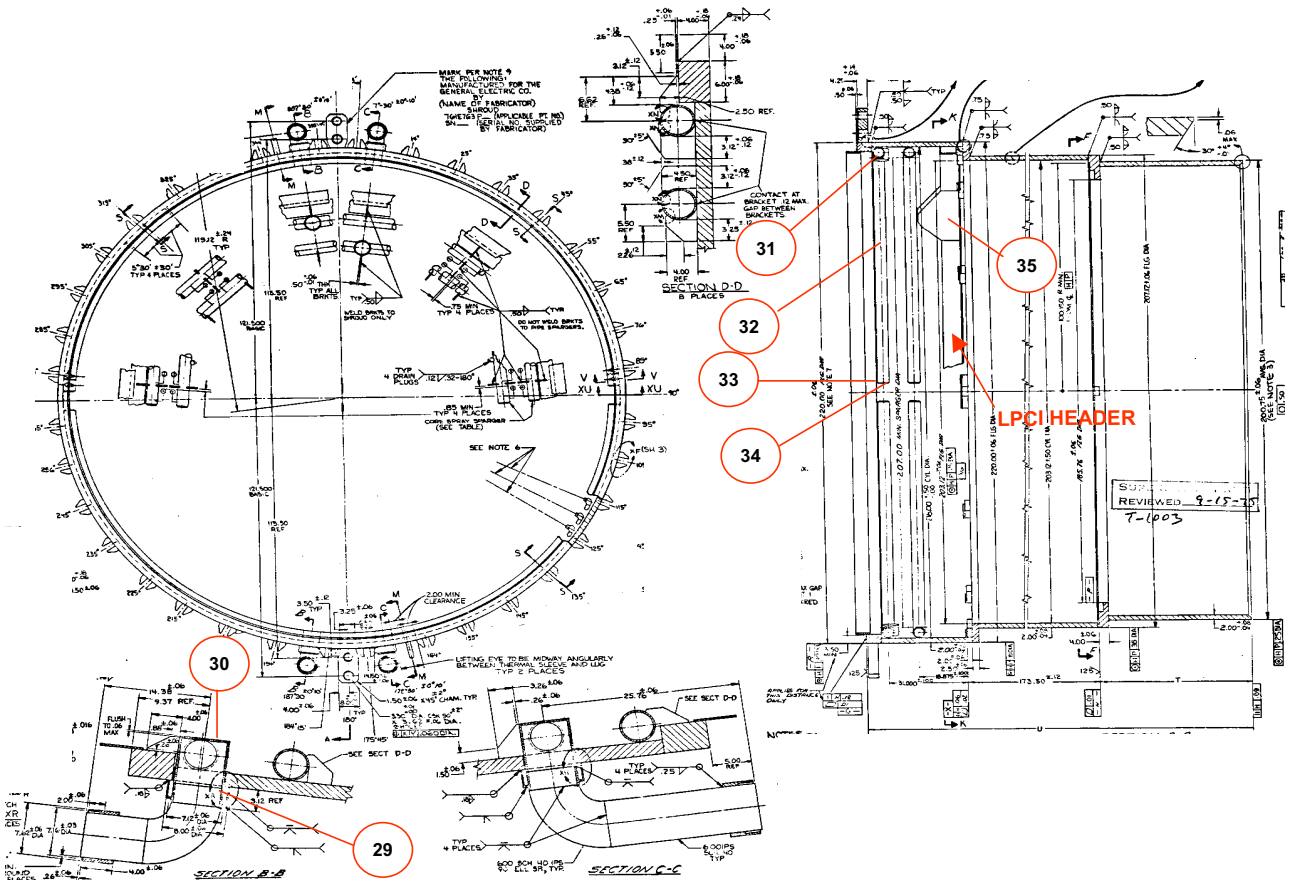


SHROUD ASSEMBLY

# GROUP 7 – REACTOR VESSEL INTERNALS
# ECCS CONNECTIONS (Sheet 6 of 8 )
# (Covers Worksheets RCS-ECCSCONN – 1 thru 50)

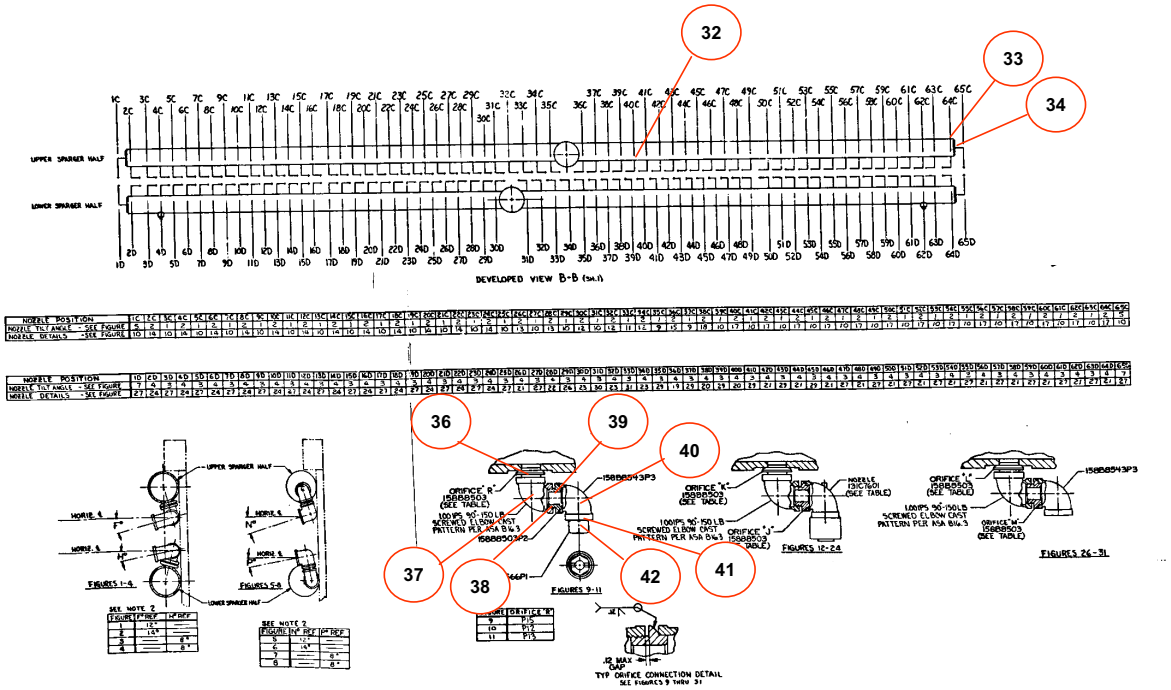


## CORE SPRAY SPARGER HEADER/NOZZLES

# GROUP 7 – REACTOR VESSEL INTERNALS
# ECCS CONNECTIONS (Sheet 7 of 8 )
# (Covers Worksheets RCS-ECCSCONN – 1 thru 50)

**LPCI COUPLING LOCATION**

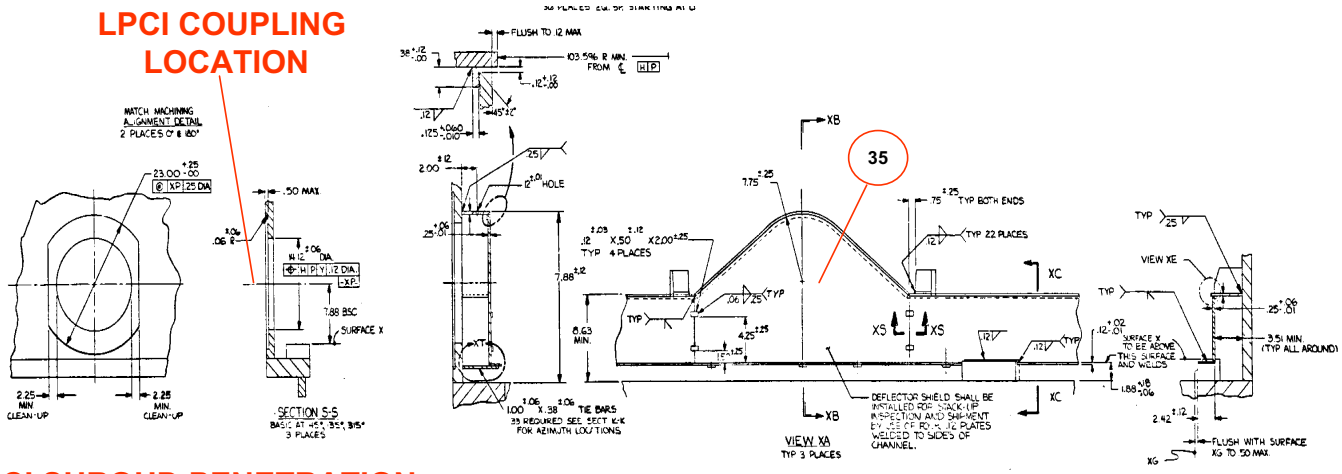


**LPCI SHROUD PENETRATION (QUANTITY 3)**

**LPCI HEADER**

# GROUP 7 – REACTOR VESSEL INTERNALS
# ECCS CONNECTIONS (Sheet 8 of 8 )
# (Covers Worksheets RCS-ECCSCONN – 1 thru 50)

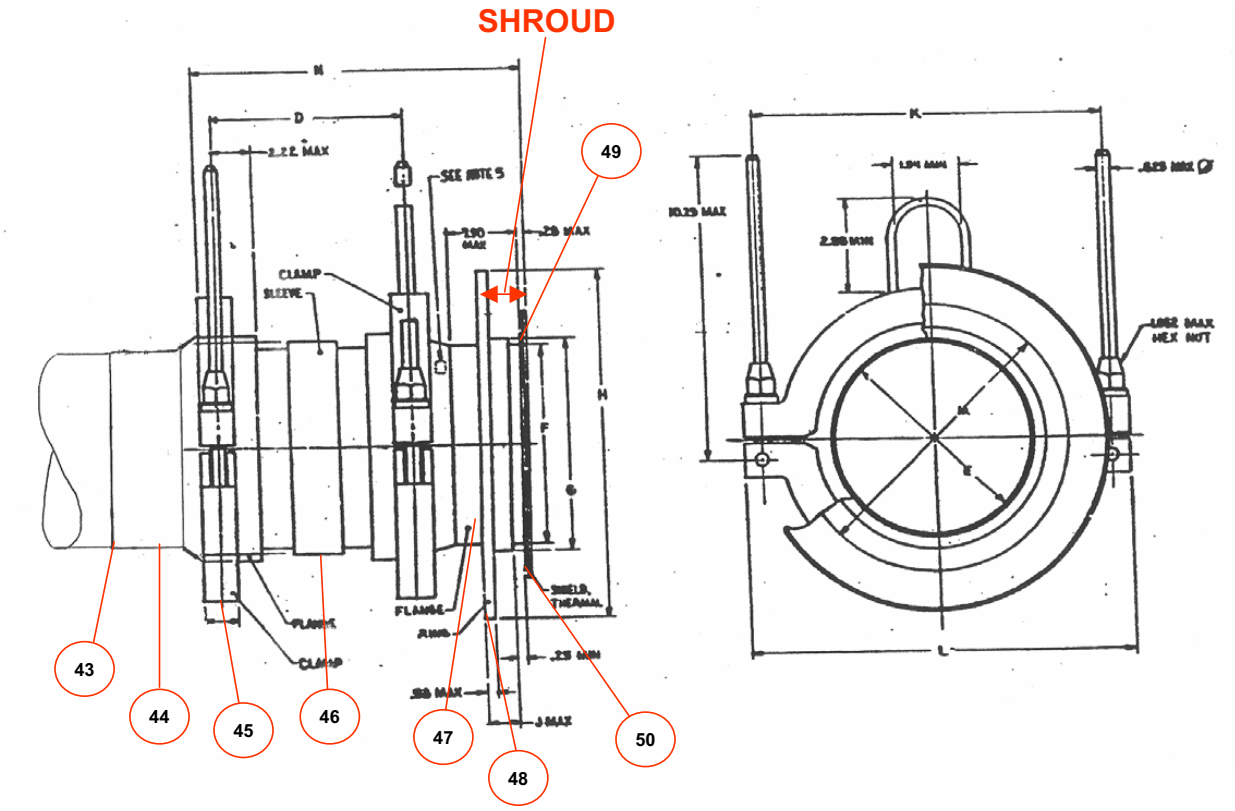

# GROUP 8 – REACTOR VESSEL INTERNALS
# STEAM SEPARATOR AND STEAM DRYER (Sheet 1 of 7)
# (Covers Worksheets– RCS-STMSEP 1 thru 14)

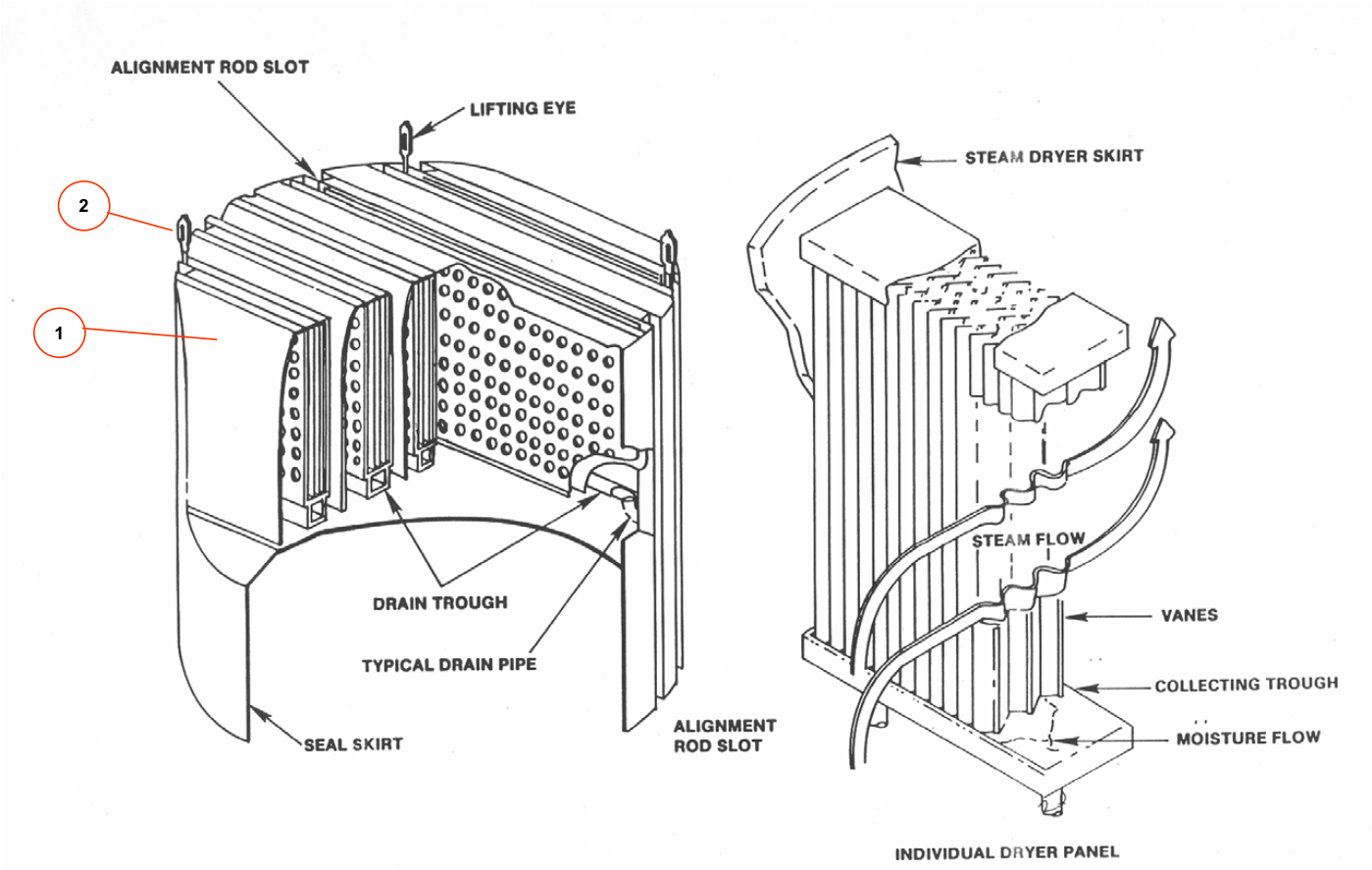


**STEAM DRYER ASSEMBLY**

# GROUP 8 – REACTOR VESSEL INTERNALS
# STEAM SEPARATOR AND STEAM DRYER (Sheet 2 of 7)
# (Covers Worksheets– RCS-STMSEP 1 thru 14)

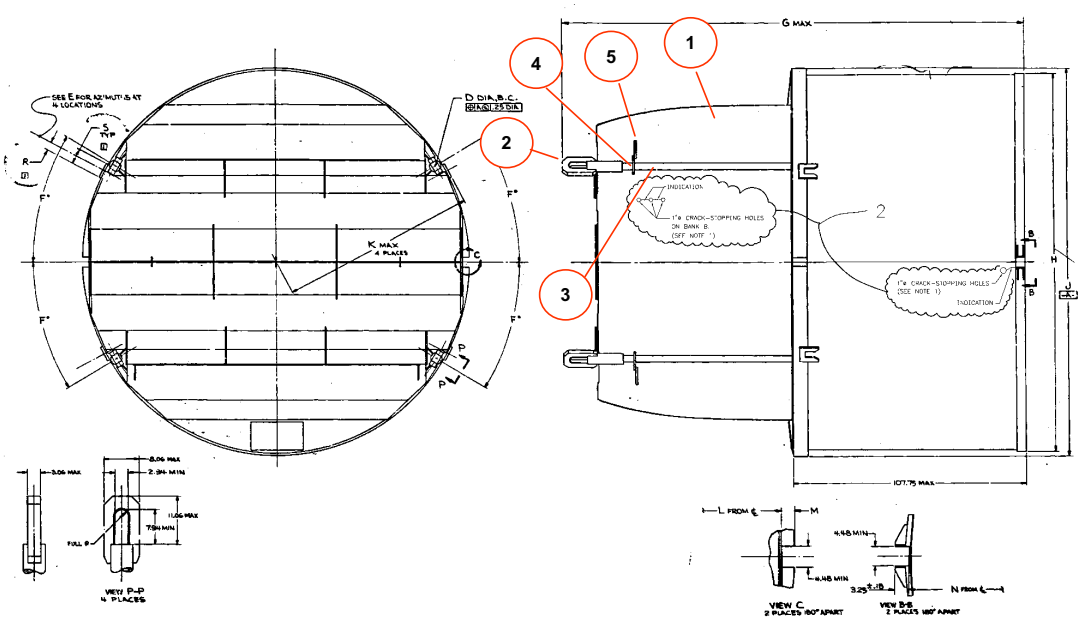


**STEAM DRYER ASSEMBLY**

# GROUP 8 – REACTOR VESSEL INTERNALS
# STEAM SEPARATOR AND STEAM DRYER (Sheet 3 of 7)
# (Covers Worksheets– RCS-STMSEP 1 thru 14)

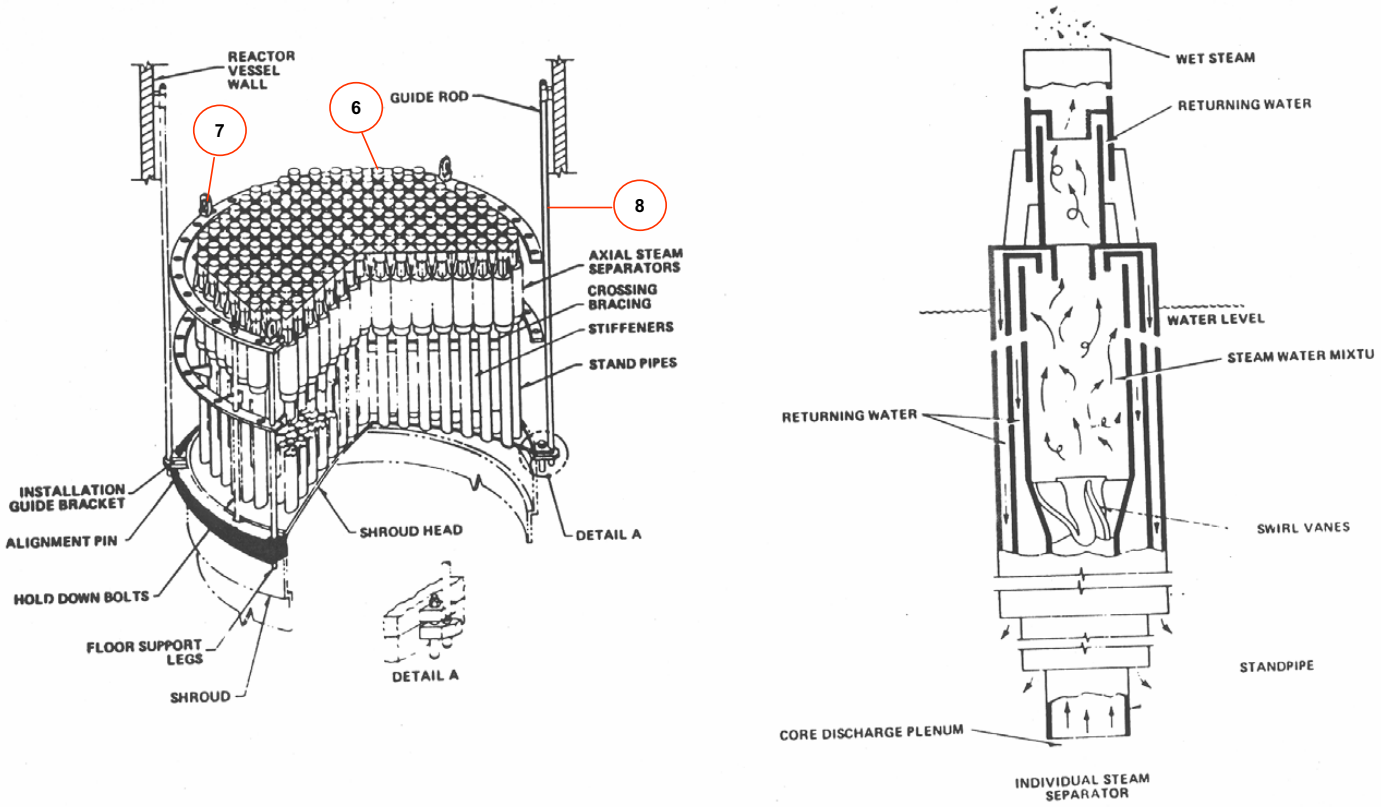


**STEAM SEPARATOR ASSEMBLY**

# GROUP 8 – REACTOR VESSEL INTERNALS
# STEAM SEPARATOR AND STEAM DRYER (Sheet 4 of 7)
# (Covers Worksheets– RCS-STMSEP 1 thru 14)

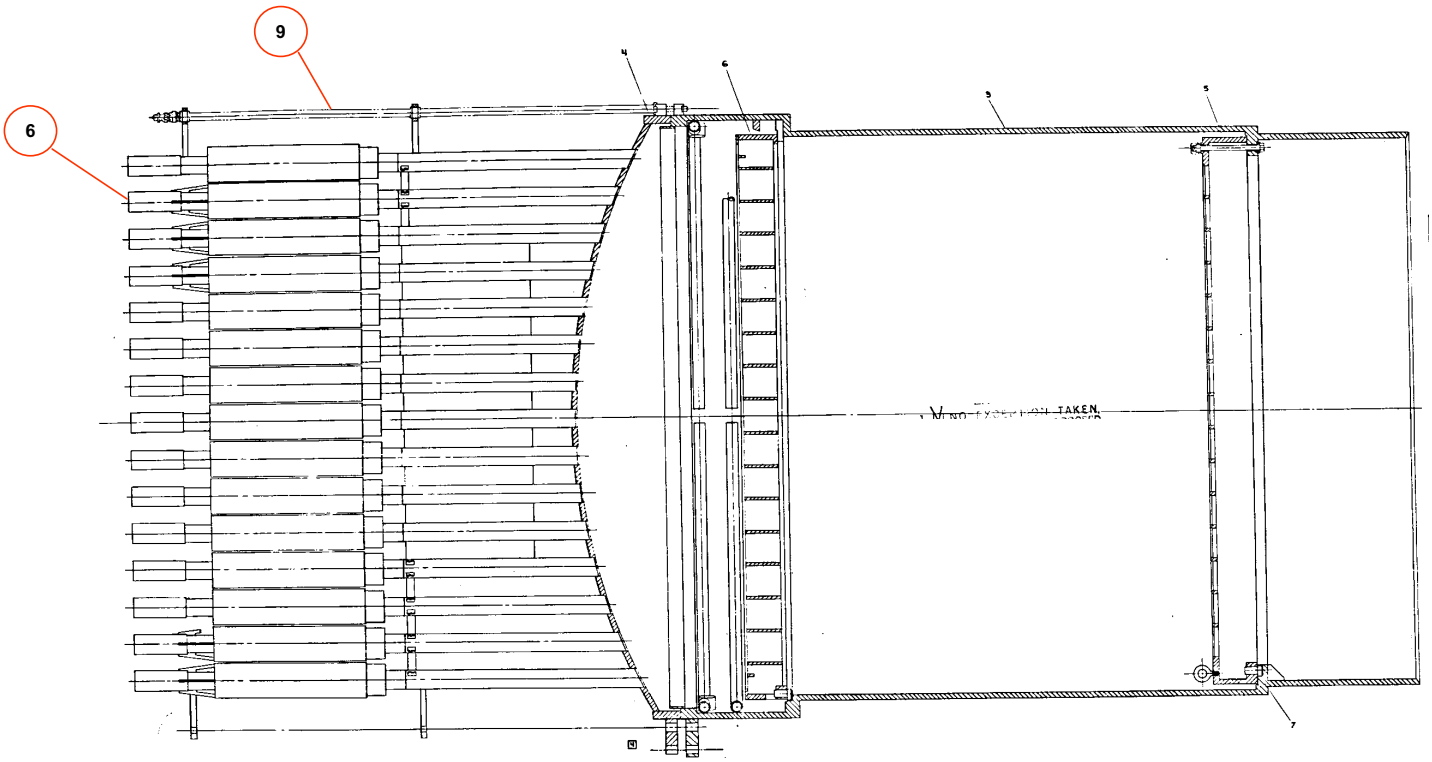


**STEAM SEPARATOR AND SHROUD ASSEMBLY**

# GROUP 8 – REACTOR VESSEL INTERNALS
# STEAM SEPARATOR AND STEAM DRYER (Sheet 5 of 7)
# (Covers Worksheets– RCS-STMSEP 1 thru 14)

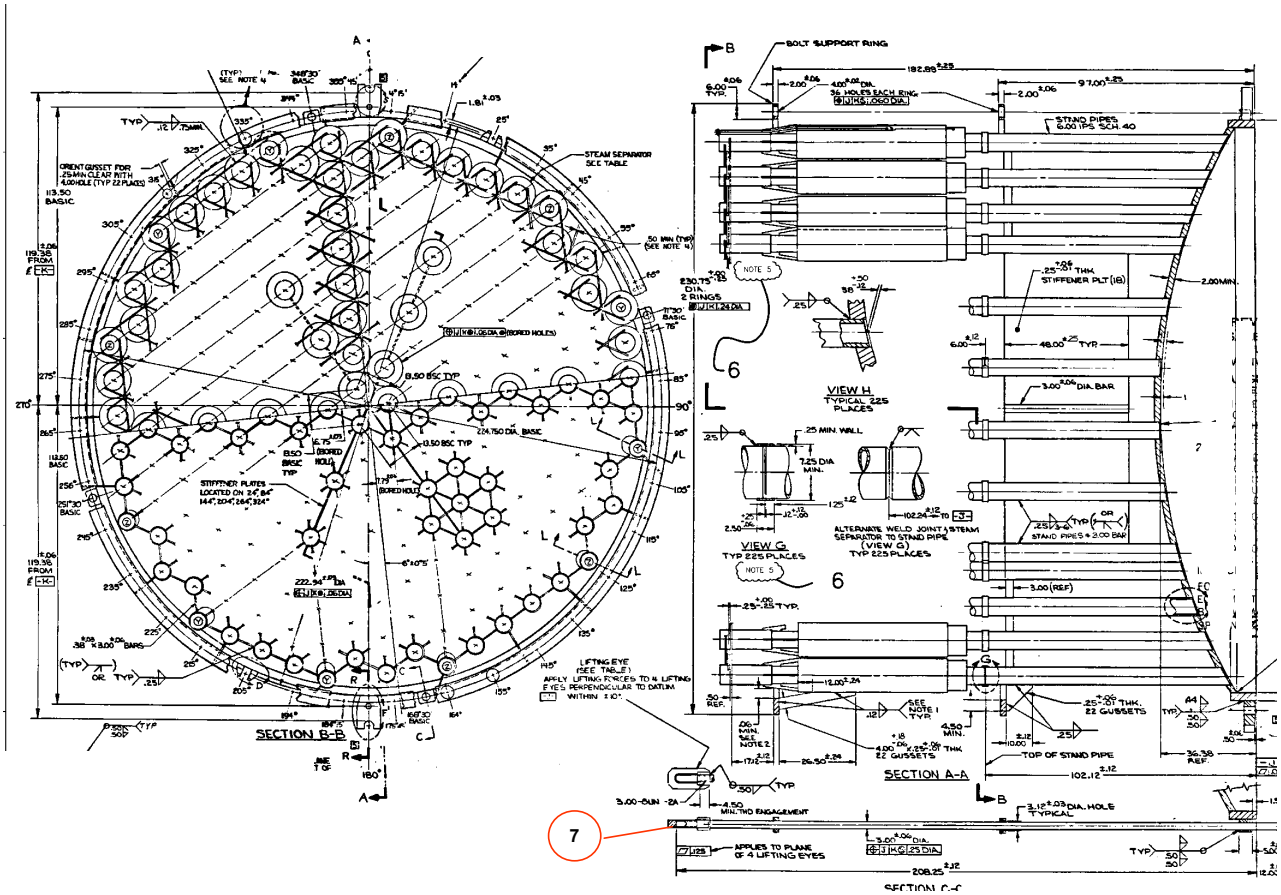


STEAM SEPARATOR ASSEMBLY

# GROUP 8 – REACTOR VESSEL INTERNALS
# STEAM SEPARATOR AND STEAM DRYER (Sheet 6 of 7)
# (Covers Worksheets– RCS-STMSEP 1 thru 14)

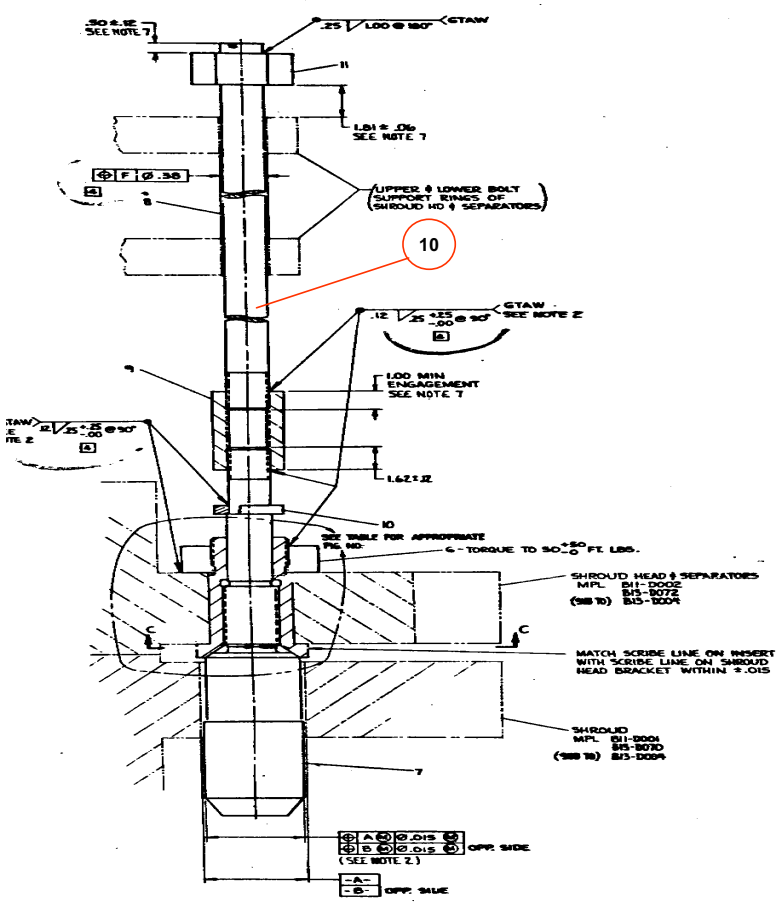


**STEAM SEPARATOR GUIDE PIN**
**(QUANTITY 2)**

# GROUP 8 – REACTOR VESSEL INTERNALS
# STEAM SEPARATOR AND STEAM DRYER (Sheet 7 of 7)
# (Covers Worksheets– RCS-STMSEP 1 thru 14)

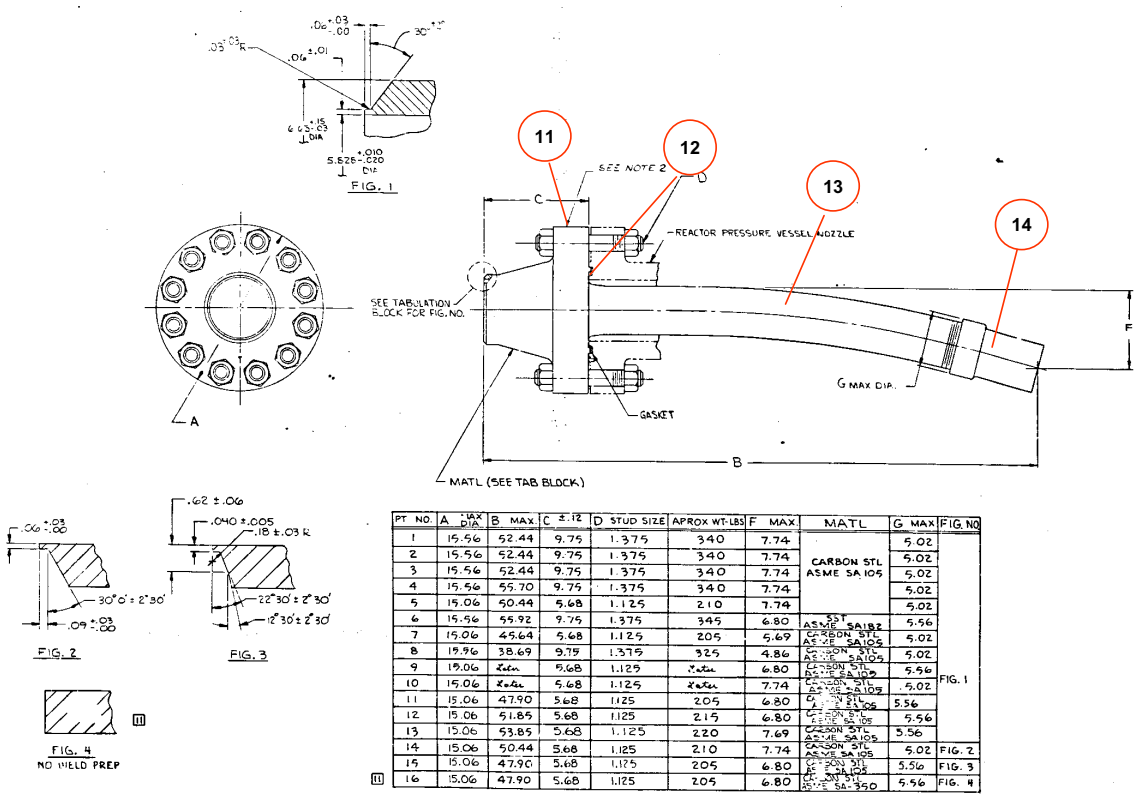


| PT NO. | A MAX DIA. | B MAX. | C ±.12 | D STUD SIZE | APROX WT-LBS | F MAX. | MATL | G MAX | FIG. NO |
|---|---|---|---|---|---|---|---|---|---|
| 1 | 15.56 | 52.44 | 9.75 | 1.375 | 340 | 7.74 | CARBON STL ASME SA 105 | 5.02 | FIG. 1 |
| 2 | 15.56 | 52.44 | 9.75 | 1.375 | 340 | 7.74 | | 5.02 | |
| 3 | 15.56 | 52.44 | 9.75 | 1.375 | 340 | 7.74 | | 5.02 | |
| 4 | 15.56 | 55.70 | 9.75 | 1.375 | 340 | 7.74 | | 5.02 | |
| 5 | 15.06 | 50.44 | 5.68 | 1.125 | 210 | 7.74 | | 5.02 | |
| 6 | 15.56 | 55.92 | 9.75 | 1.375 | 345 | 6.80 | ASME SA182 | 5.56 | |
| 7 | 15.06 | 45.64 | 5.68 | 1.125 | 205 | 5.69 | CARBON STL ASME SA105 | 5.02 | |
| 8 | 15.96 | 38.69 | 9.75 | 1.375 | 325 | 4.86 | CARBON STL ASME SA105 | 5.02 | |
| 9 | 15.06 | Note | 5.68 | 1.125 | Note | 6.80 | CARBON STL ASME SA105 | 5.56 | |
| 10 | 15.06 | Note | 5.68 | 1.125 | Note | 7.74 | CARBON STL ASME SA105 | 5.02 | |
| 11 | 15.06 | 47.90 | 5.68 | 1.125 | 205 | 6.80 | CARBON STL ASME SA105 | 5.56 | |
| 12 | 15.06 | 51.85 | 5.68 | 1.125 | 215 | 6.80 | CARBON STL ASME SA105 | 5.56 | |
| 13 | 15.06 | 53.85 | 5.68 | 1.125 | 220 | 7.69 | CARBON STL ASME SA105 | 5.56 | |
| 14 | 15.06 | 50.44 | 5.68 | 1.125 | 210 | 7.74 | CARBON STL ASME SA105 | 5.02 | FIG. 2 |
| 15 | 15.06 | 47.90 | 5.68 | 1.125 | 205 | 6.80 | CARBON STL ASME SA105 | 5.56 | FIG. 3 |
| 16 | 15.06 | 47.90 | 5.68 | 1.125 | 205 | 6.80 | CARBON STL ASME SA-350 | 5.56 | FIG. 4 |

**HEAD SPRAY NOZZLE**

# GROUP 9 – REACTOR COOLANT RECIRCULATION SYSTEM (Sheet 1 of 4)
## (Covers Worksheets RCS-RECIRC – 1 thru 90)

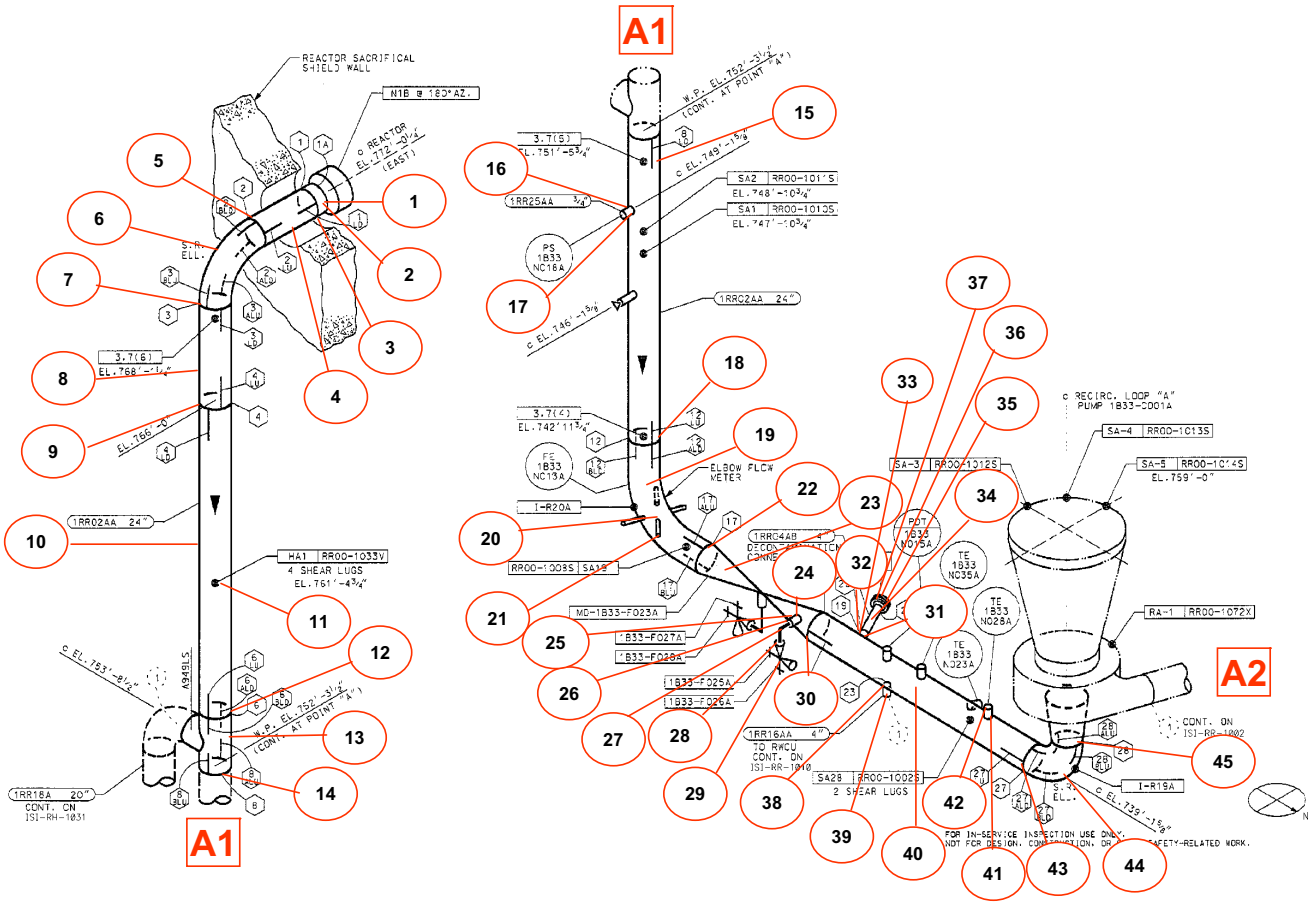

# GROUP 9 – REACTOR COOLANT RECIRCULATION SYSTEM (Sheet 2 of 4)
## (Covers Worksheets RCS-RECIRC – 1 thru 90)

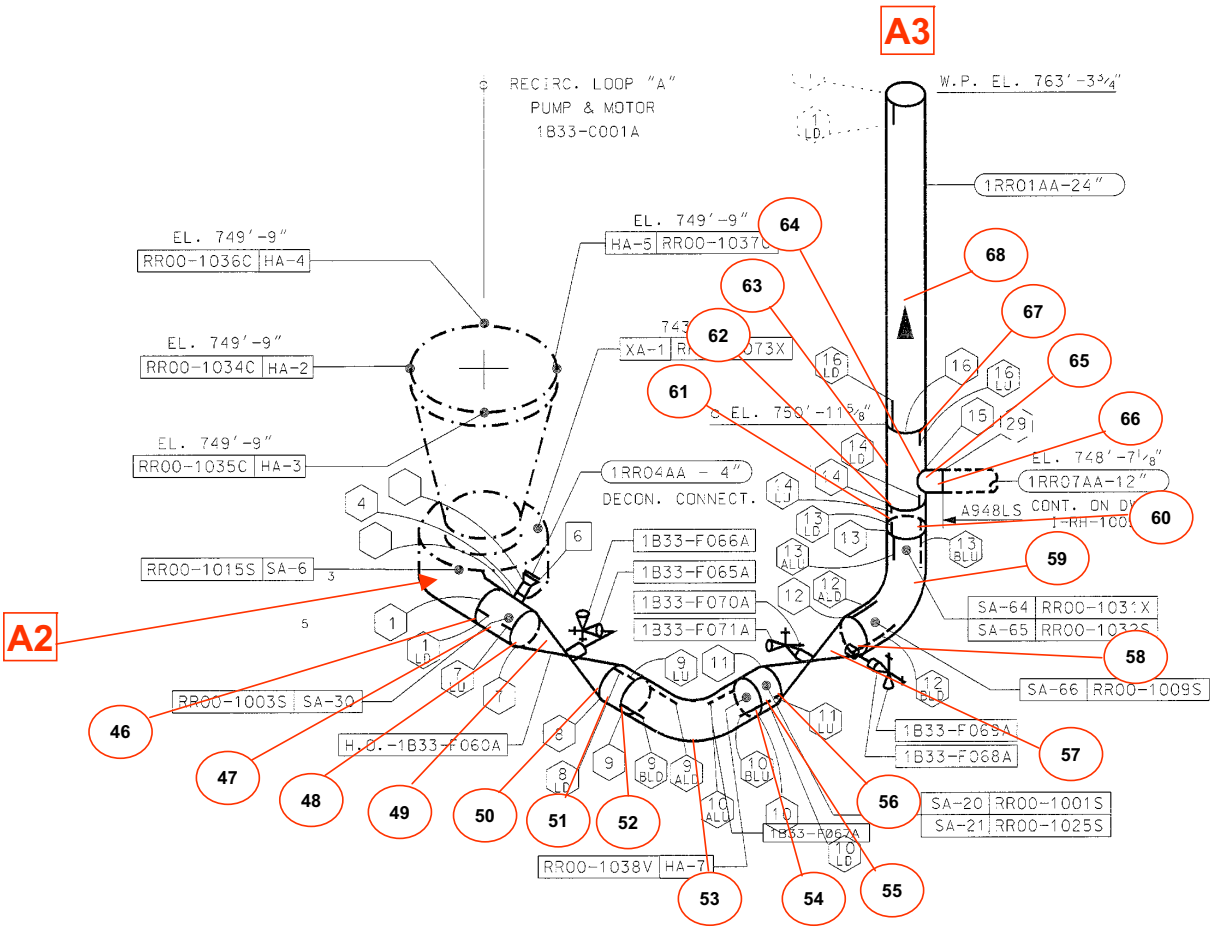

# GROUP 9 – REACTOR COOLANT RECIRCULATION SYSTEM (Sheet 3 of 4)
## (Covers Worksheets RCS-RECIRC – 1 thru 90)

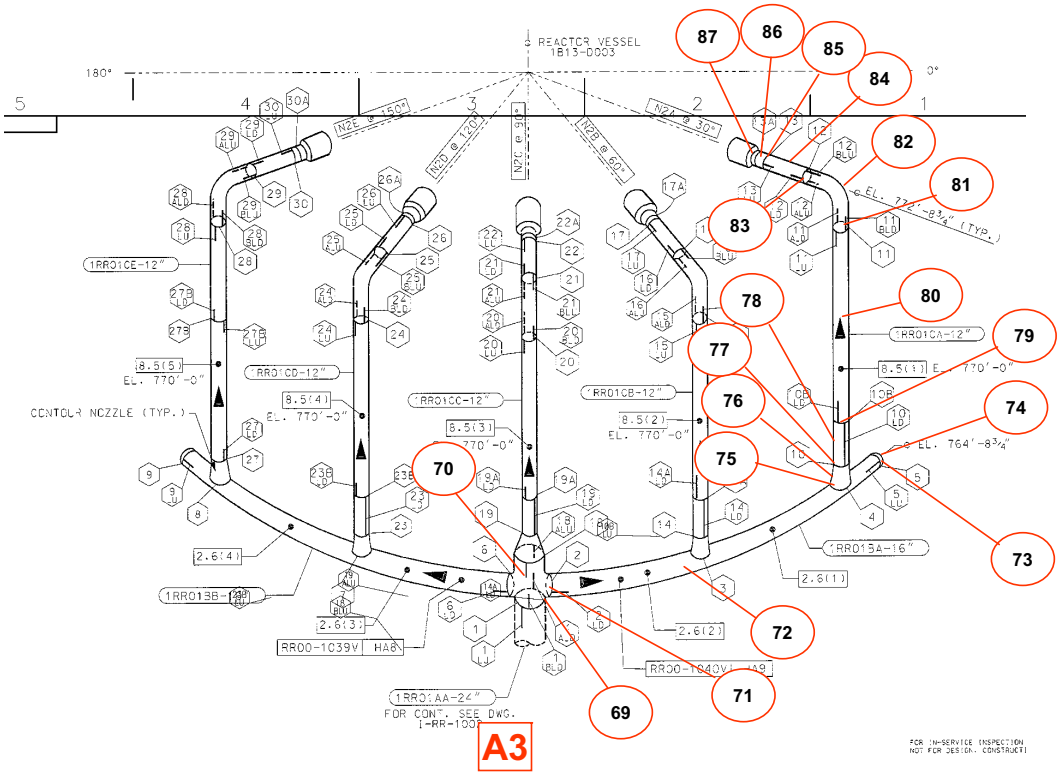

# GROUP 9 – REACTOR COOLANT RECIRCULATION SYSTEM (Sheet 4 of 4)
## (Covers Worksheets RCS-RECIRC – 1 thru 90)

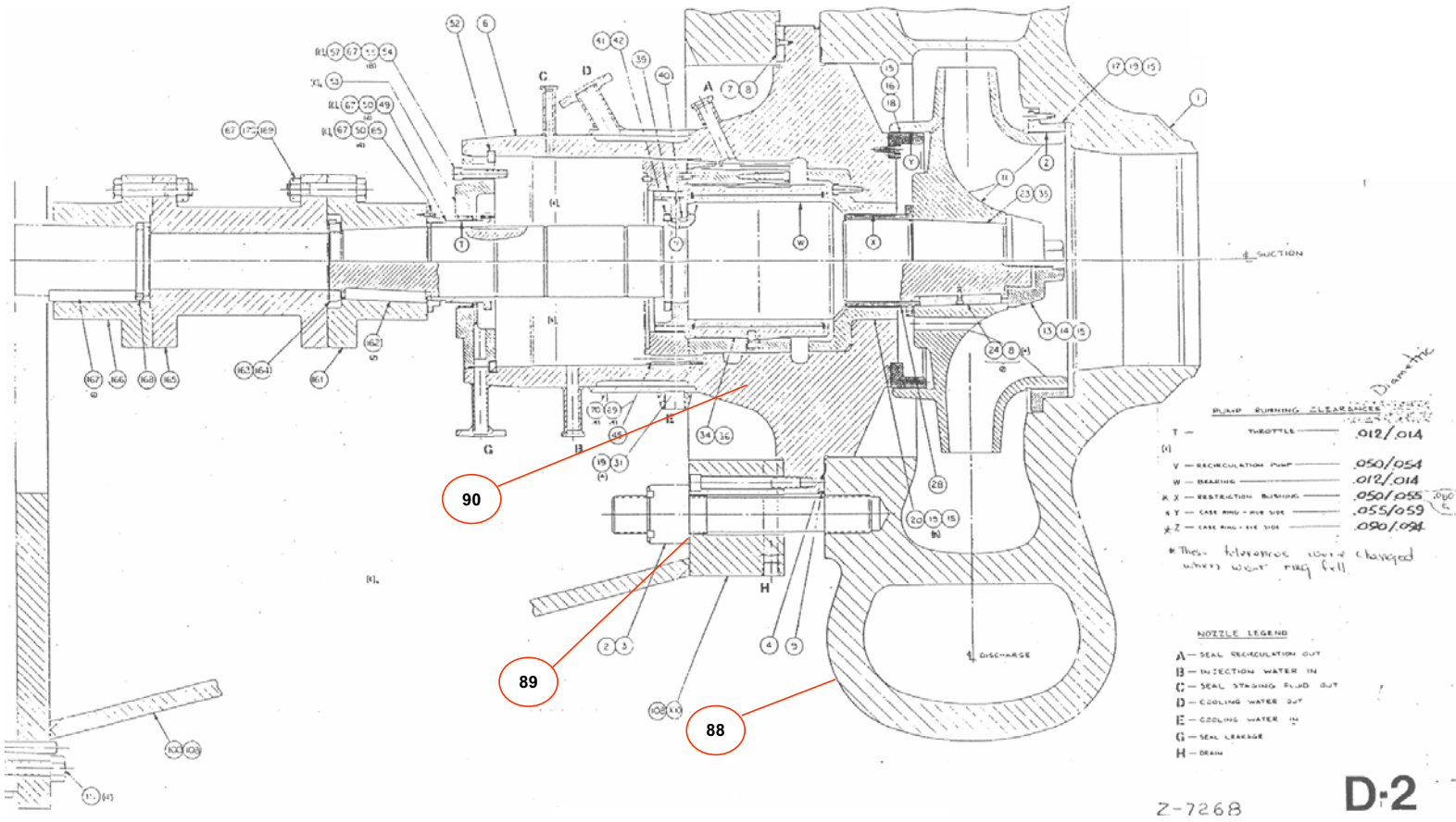


**RR PUMP**

# GROUP 10 – LOW PRESSURE CORE SPRAY (Sheet 1 of 10)
## (Covers Worksheets ECCS-LPCS – 1 thru 96)

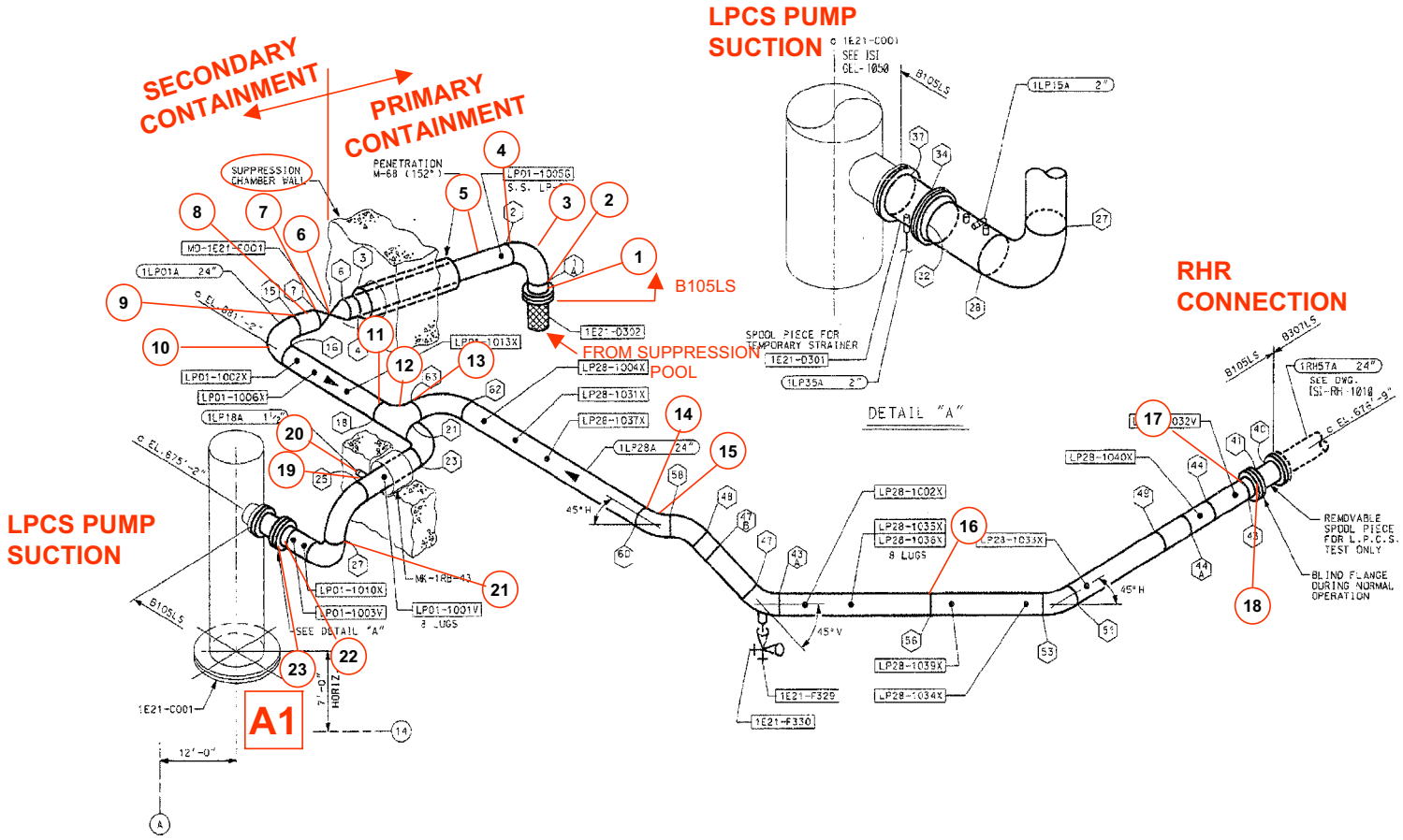

# GROUP 10 – LOW PRESSURE CORE SPRAY (Sheet 2 of 10)
# (Covers Worksheets ECCS-LPCS – 1 thru 96)

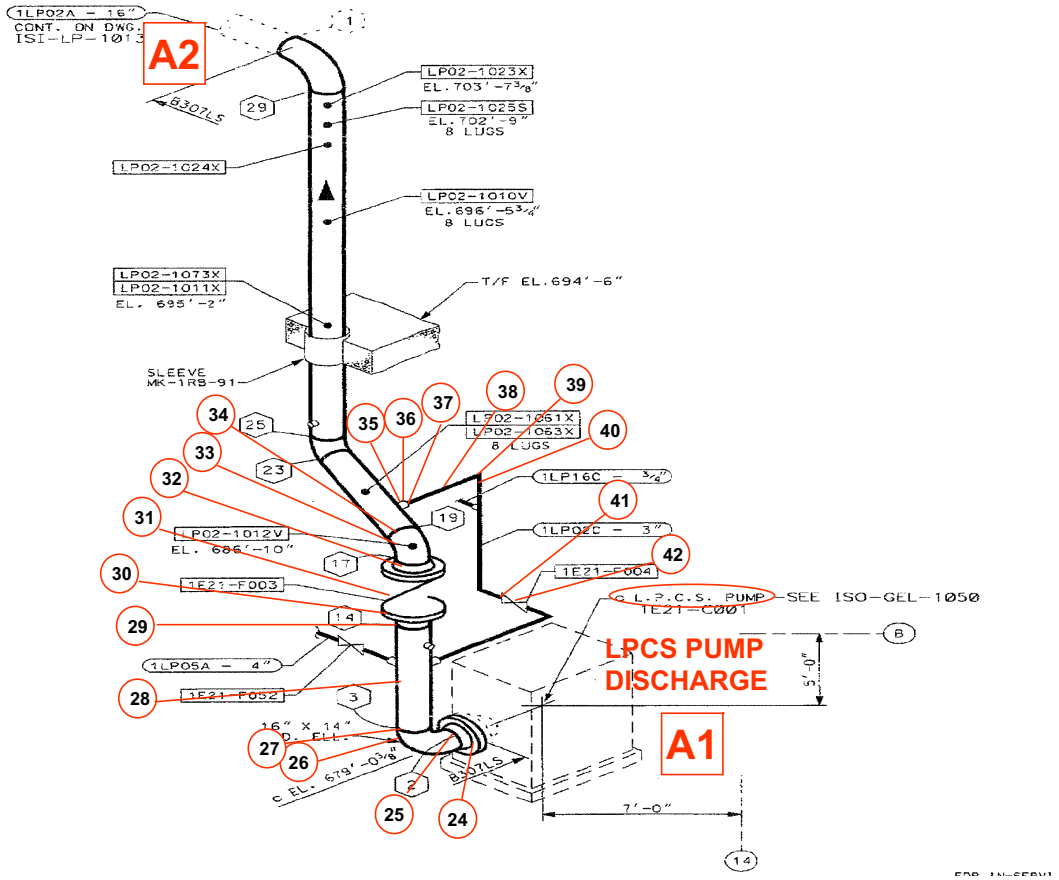

# GROUP 10 – LOW PRESSURE CORE SPRAY (Sheet 3 of 10)
## (Covers Worksheets ECCS-LPCS – 1 thru 96)

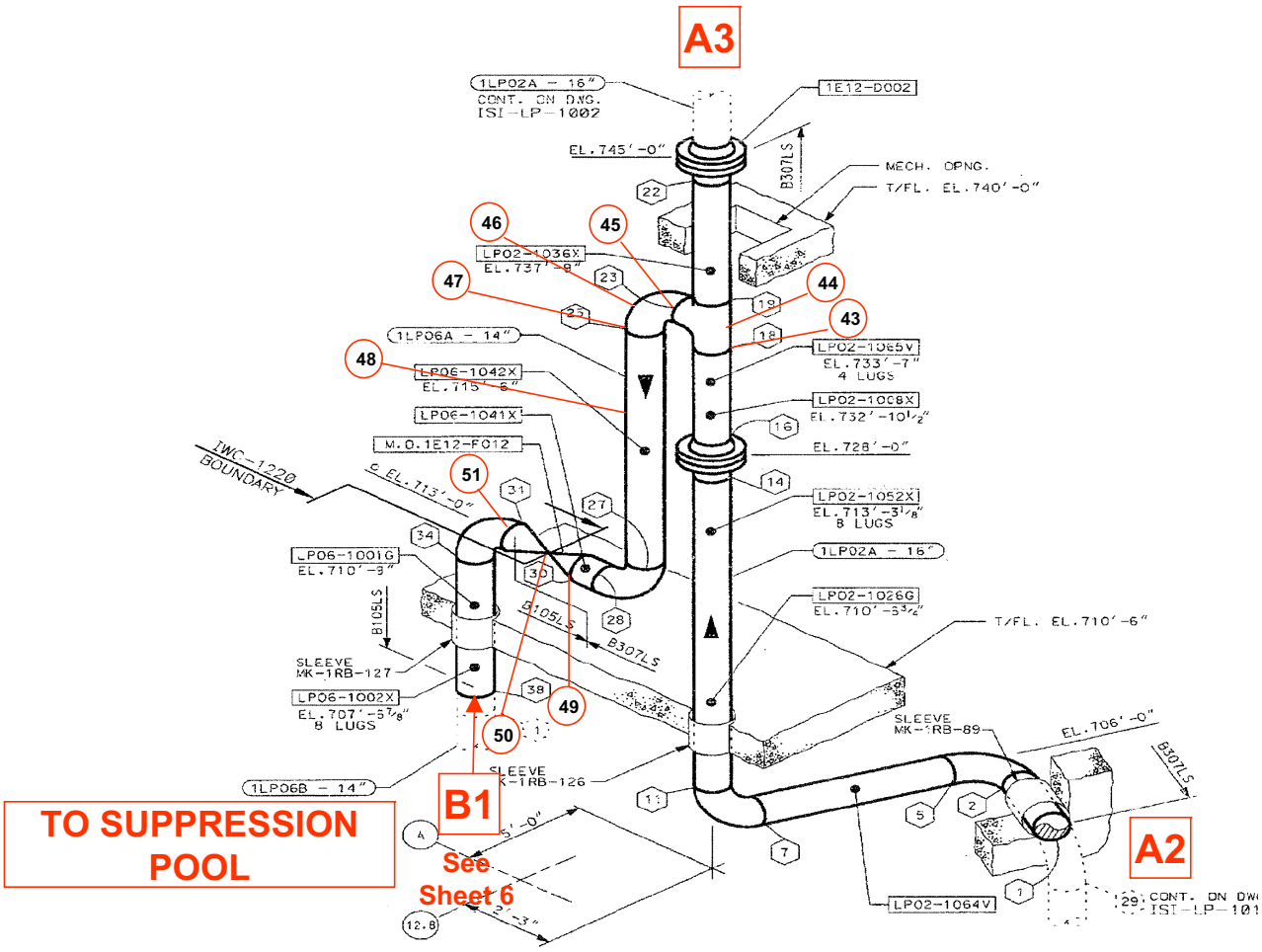

# GROUP 10 – LOW PRESSURE CORE SPRAY (Sheet 4 of 10)
## (Covers Worksheets ECCS-LPCS – 1 thru 96)

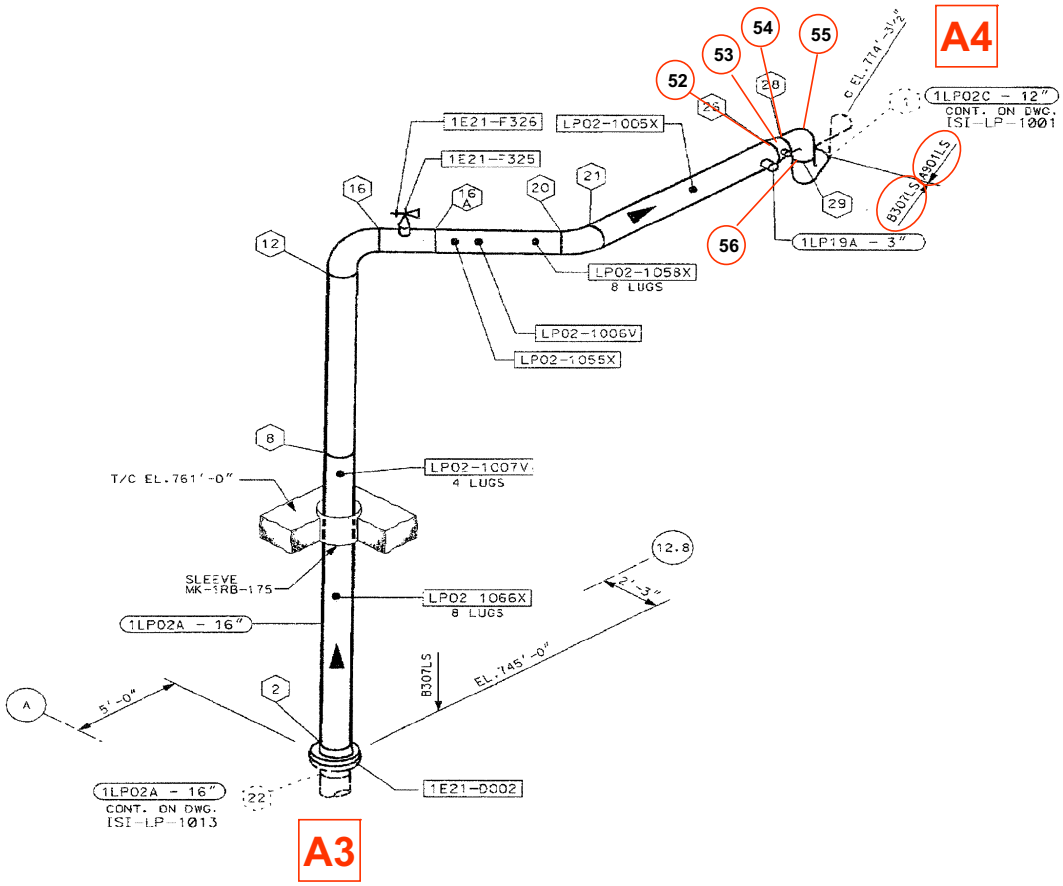

# GROUP 10 – LOW PRESSURE CORE SPRAY (Sheet 5 of 10)
## (Covers Worksheets ECCS-LPCS – 1 thru 96)

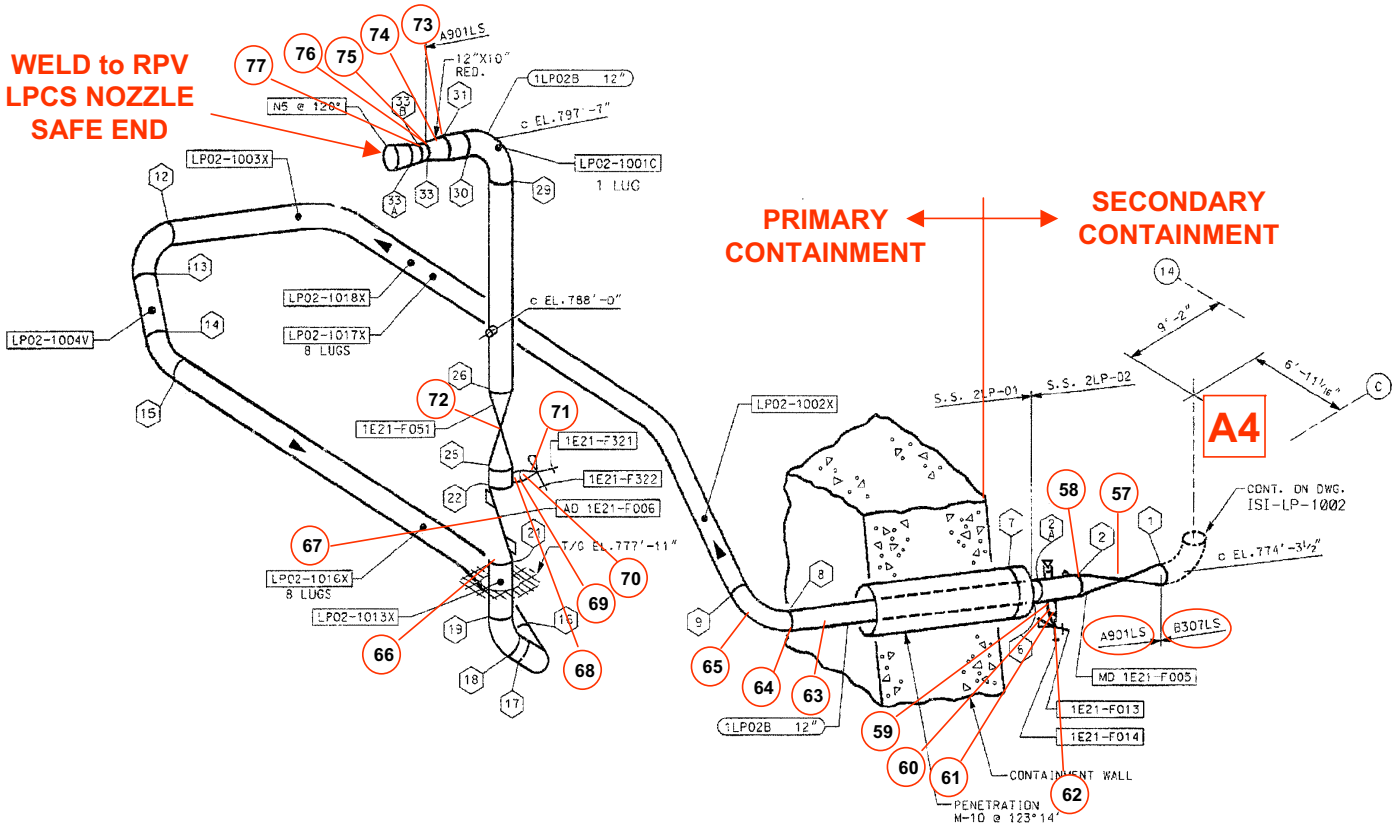

# GROUP 10 – LOW PRESSURE CORE SPRAY (Sheet 6 of 10)
## (Covers Worksheets ECCS-LPCS – 1 thru 96)

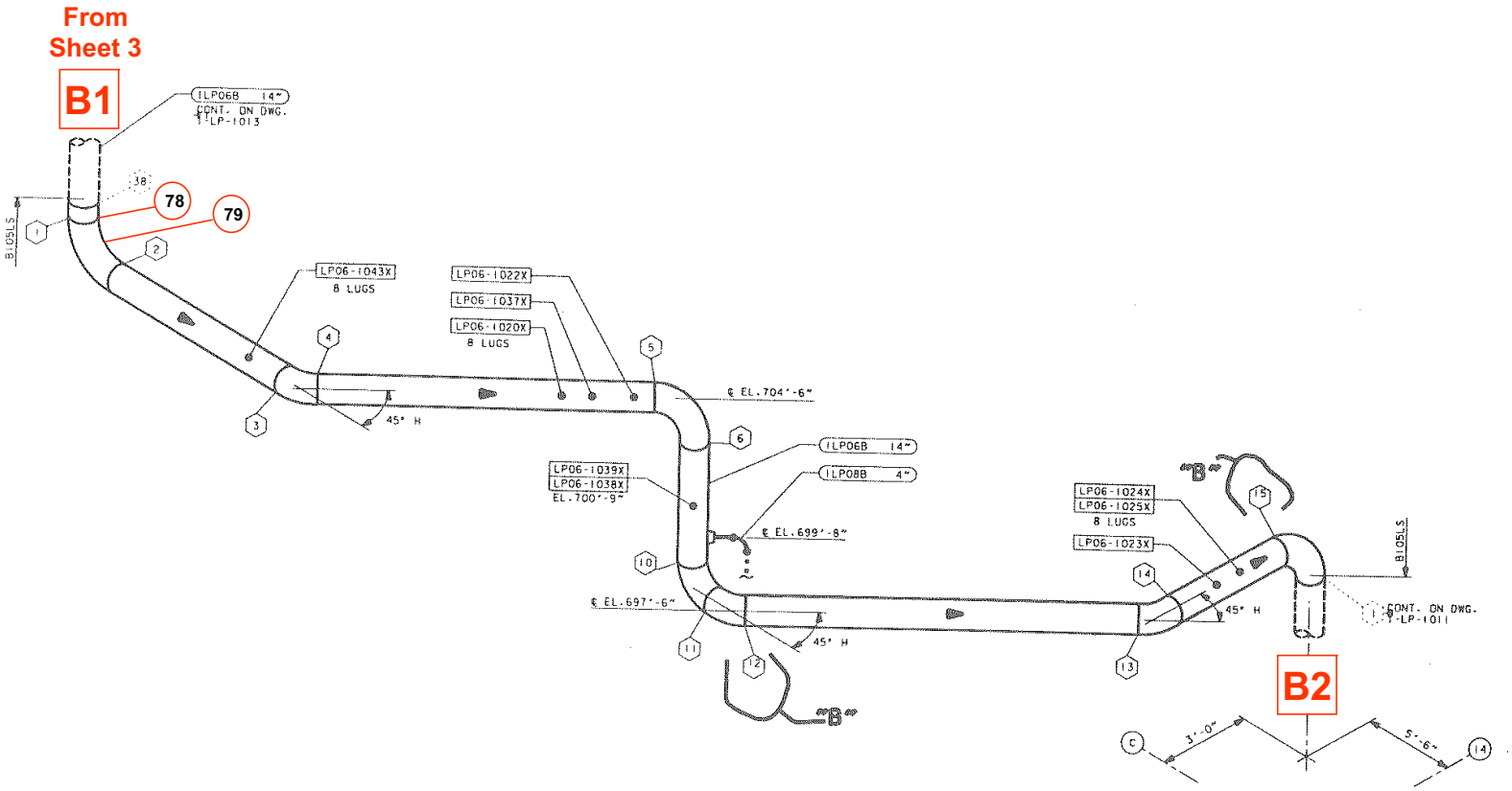

# GROUP 10 – LOW PRESSURE CORE SPRAY (Sheet 7 of 10)
# (Covers Worksheets ECCS-LPCS – 1 thru 96)

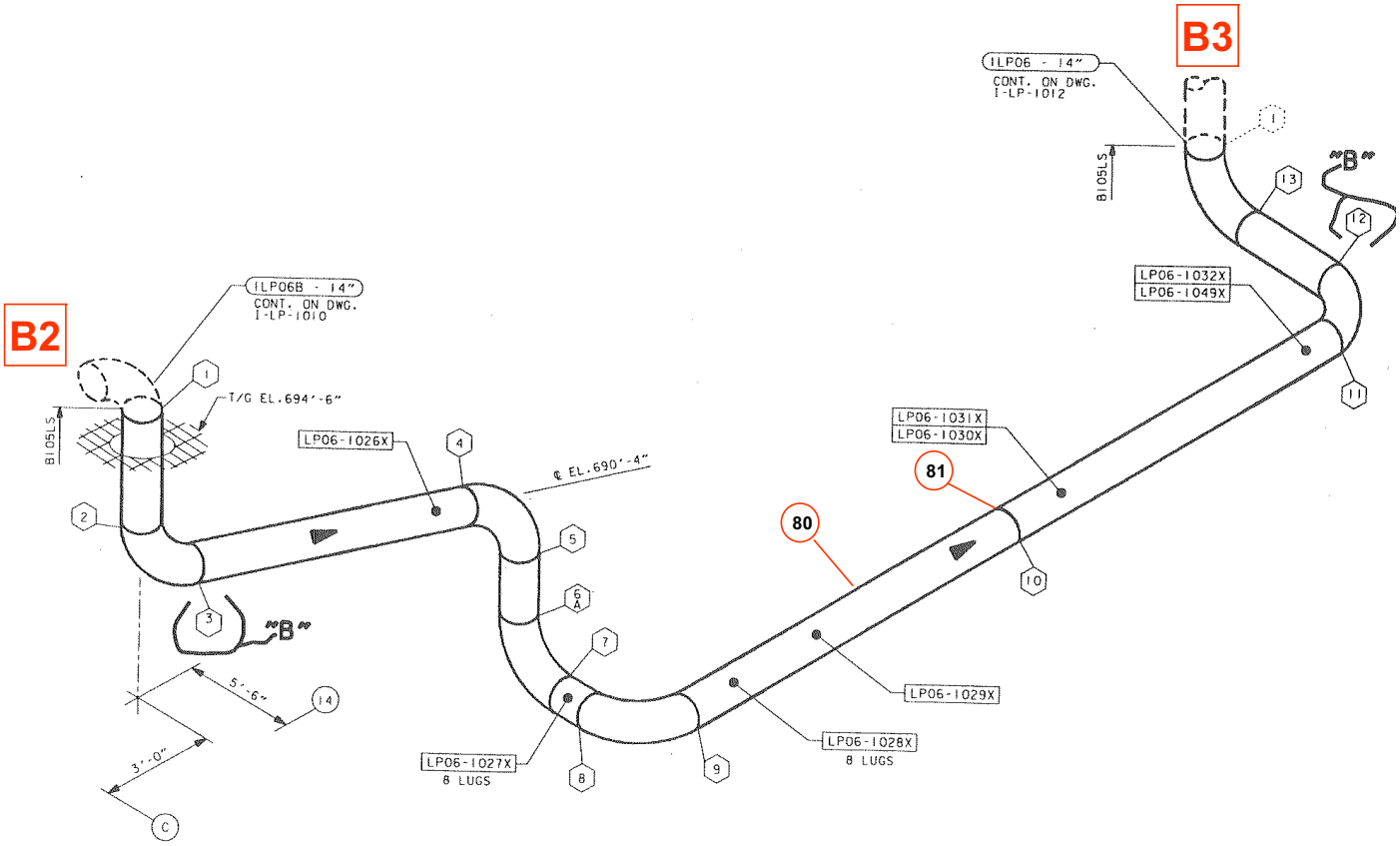

# GROUP 10 – LOW PRESSURE CORE SPRAY (Sheet 8 of 10)
## (Covers Worksheets ECCS-LPCS – 1 thru 96)

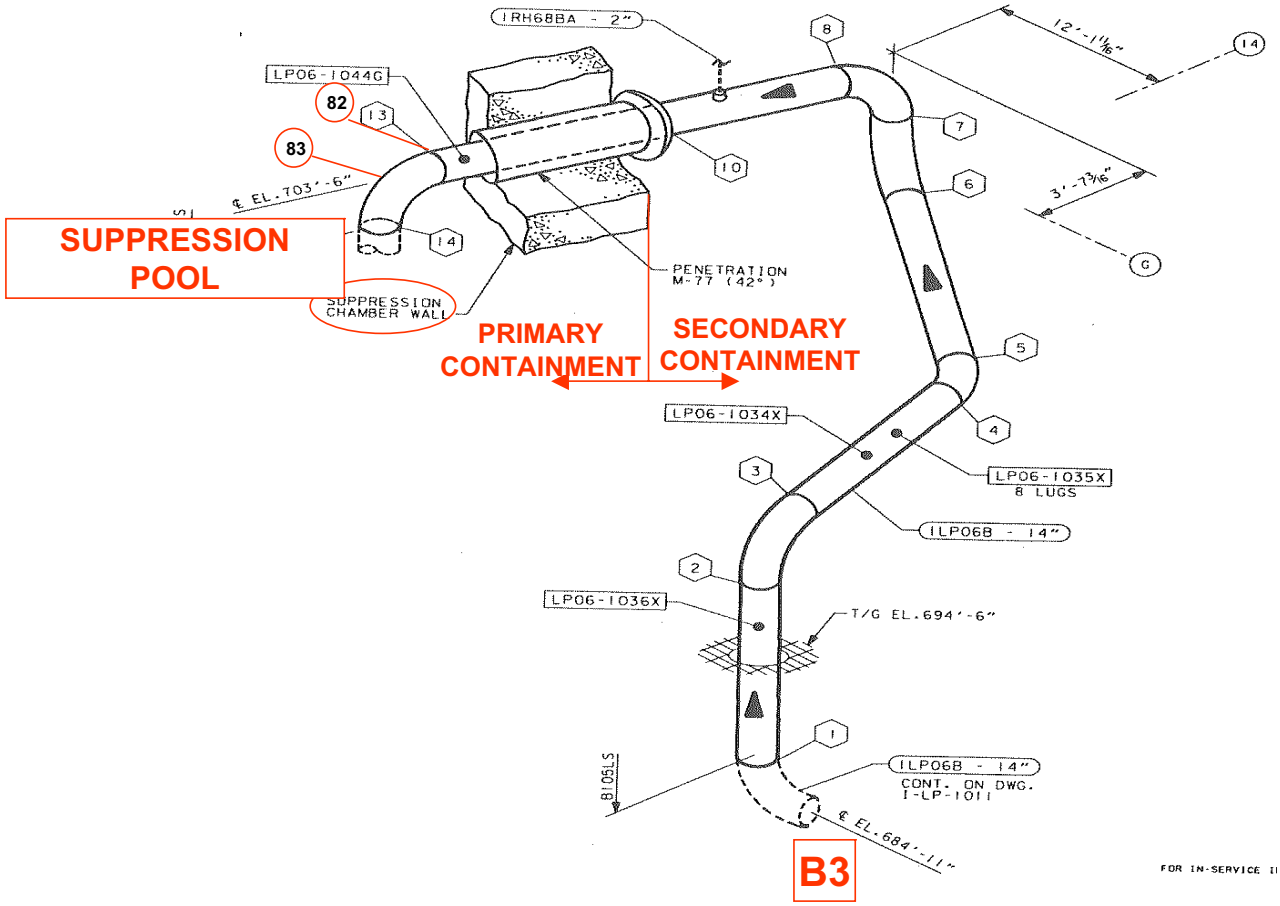

# GROUP 10 – LOW PRESSURE CORE SPRAY (Sheet 9 of 10)
## (Covers Worksheets ECCS-LPCS – 1 thru 96)

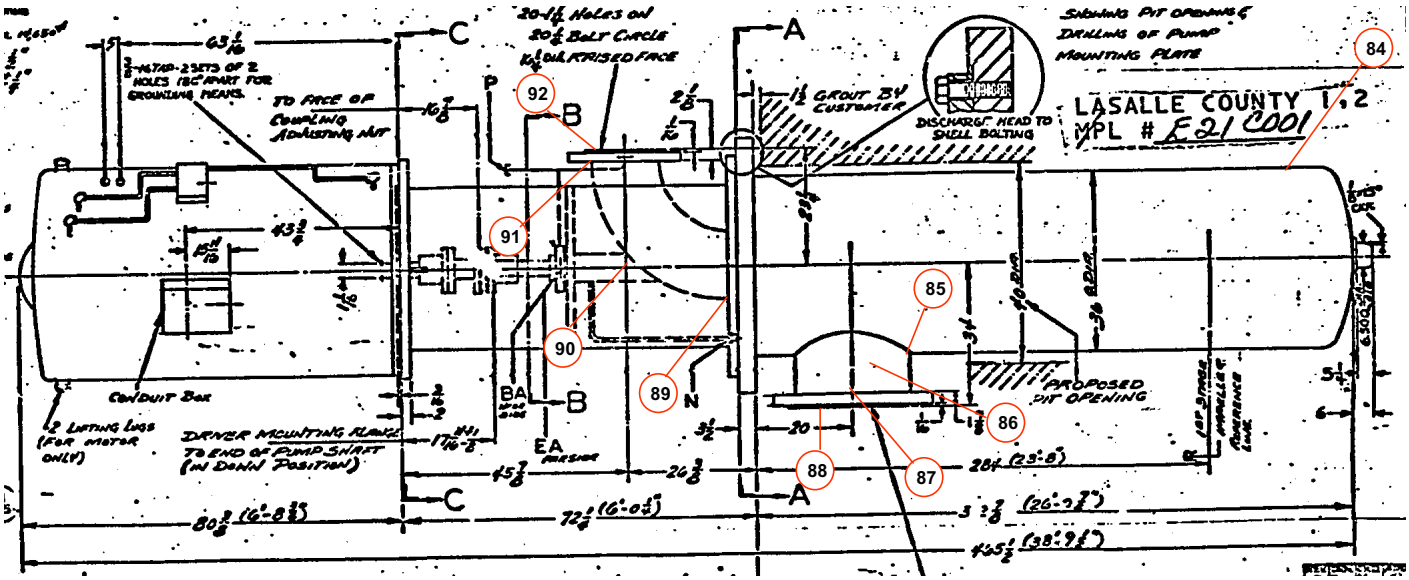


**LPCS PUMP E21 C001**

# GROUP 10 – LOW PRESSURE CORE SPRAY (Sheet 10 of 10)
# (Covers Worksheets ECCS-LPCS – 1 thru 96)

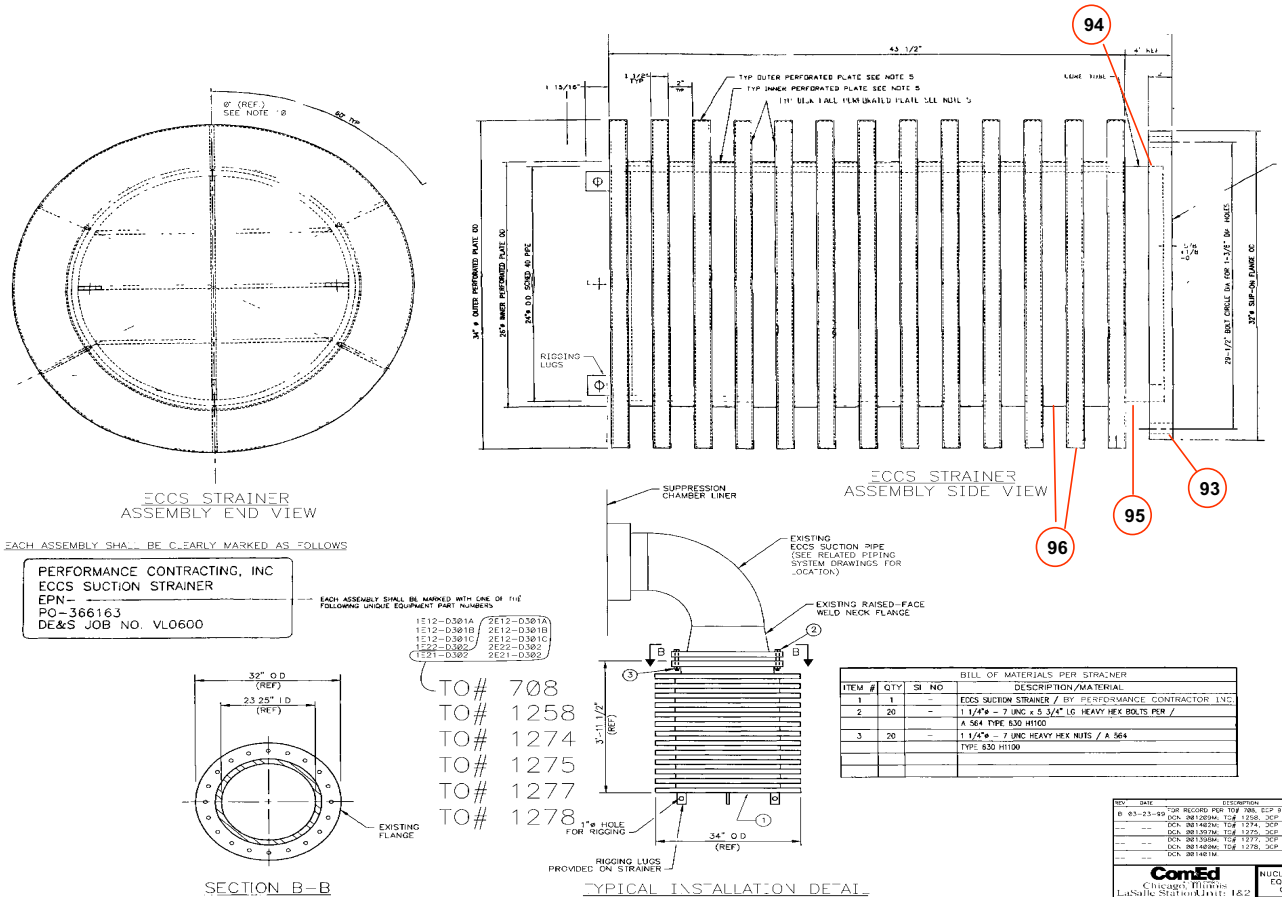


## SUPPRESSION POOL SUCTION STRAINER
## (LPCS, HPCS, AND RHR)

# GROUP 11 – HIGH PRESSURE CORE SPRAY (Sheet 1 of 7)
# (Covers Worksheets ECCS-HPCS – 1 thru 83)

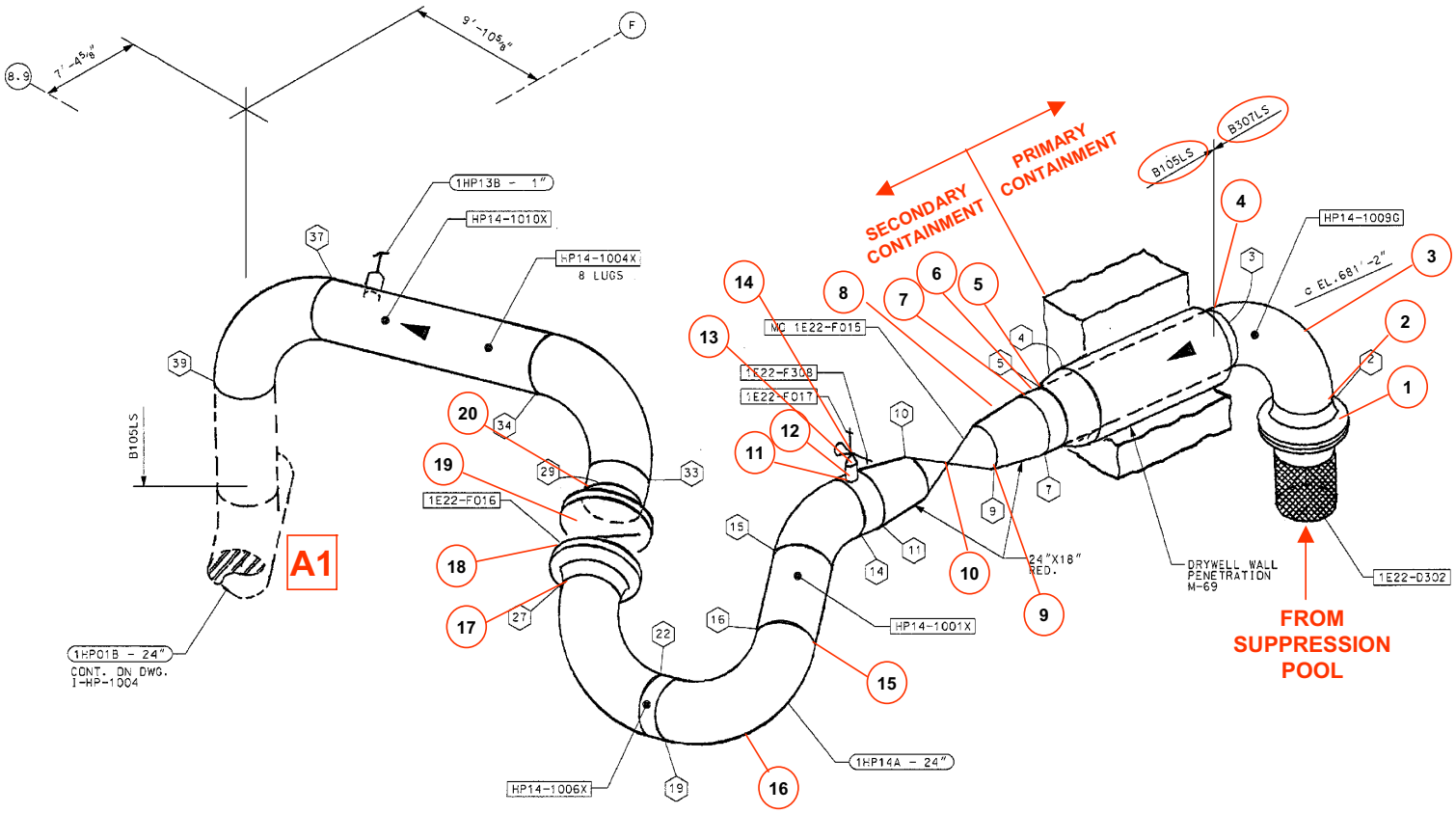

# GROUP 11 – HIGH PRESSURE CORE SPRAY (Sheet 2 of 7)
# (Covers Worksheets ECCS-HPCS – 1 thru 83)

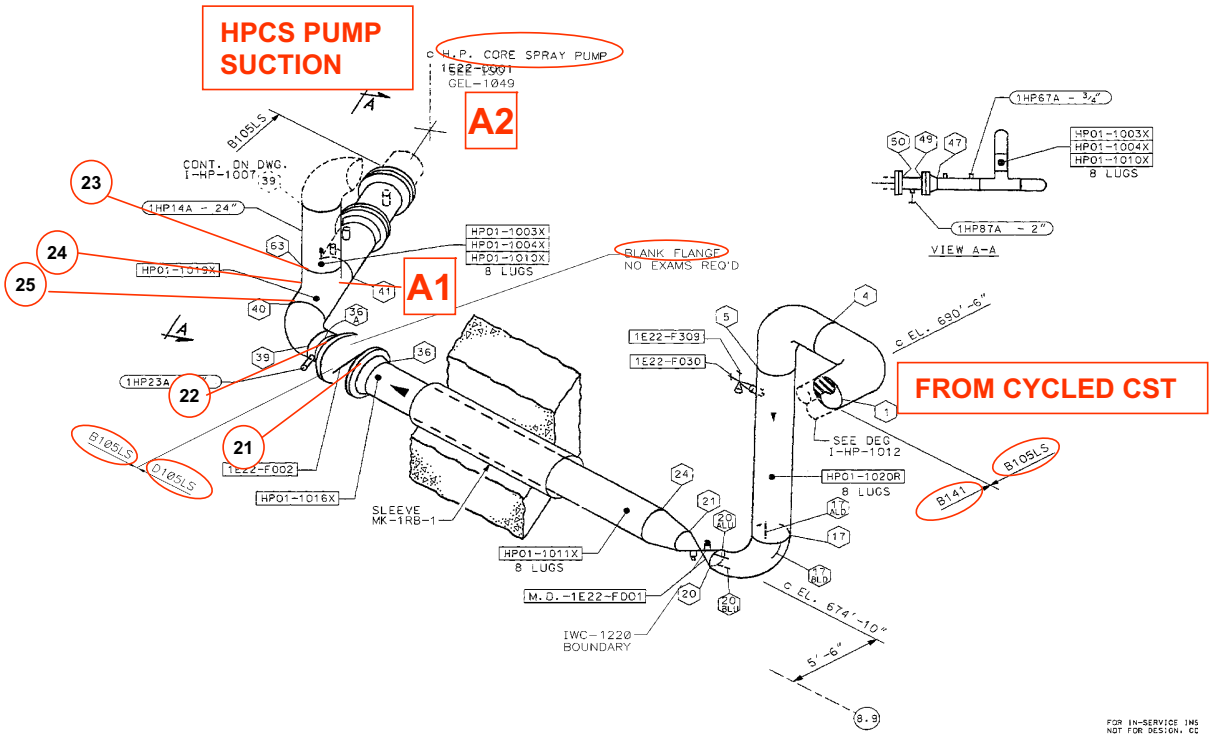

# GROUP 11 – HIGH PRESSURE CORE SPRAY (Sheet 3 of 7)
## (Covers Worksheets ECCS-HPCS – 1 thru 83)

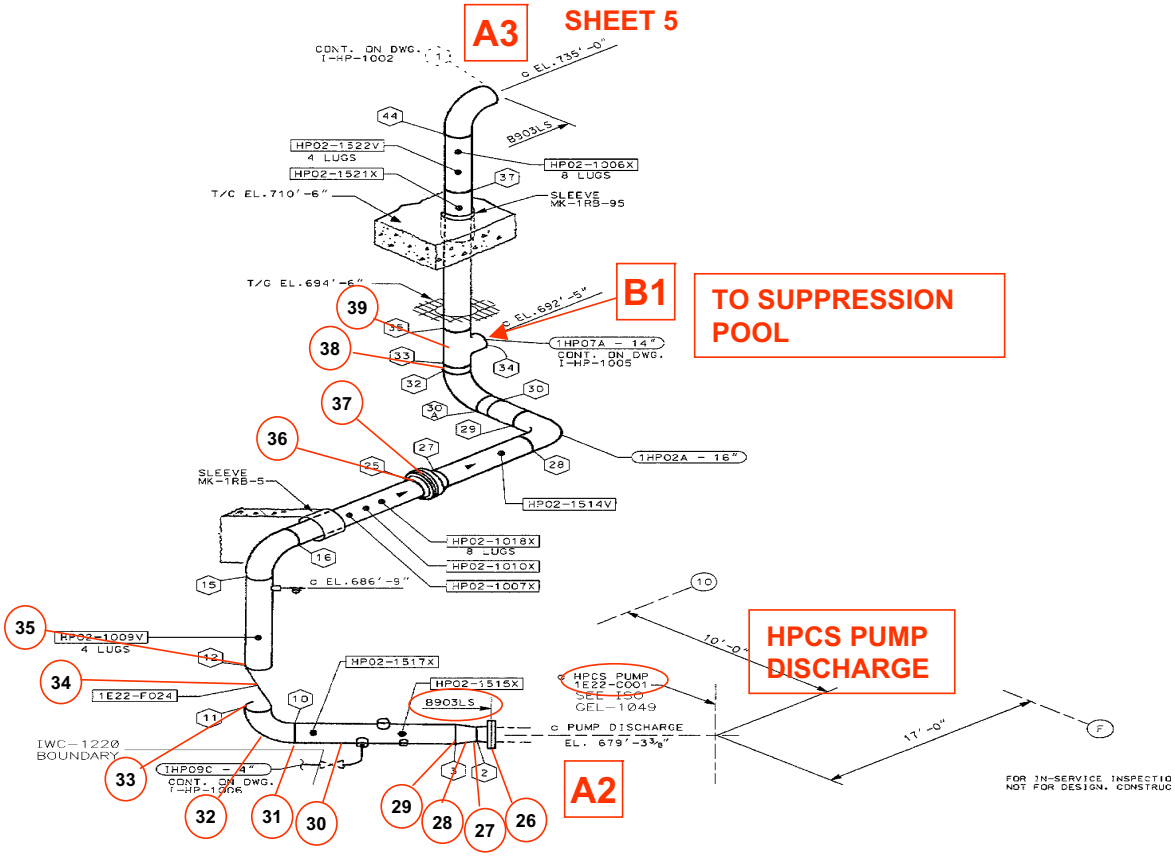

# GROUP 11 – HIGH PRESSURE CORE SPRAY (Sheet 4 of 7)
## (Covers Worksheets ECCS-HPCS – 1 thru 83)

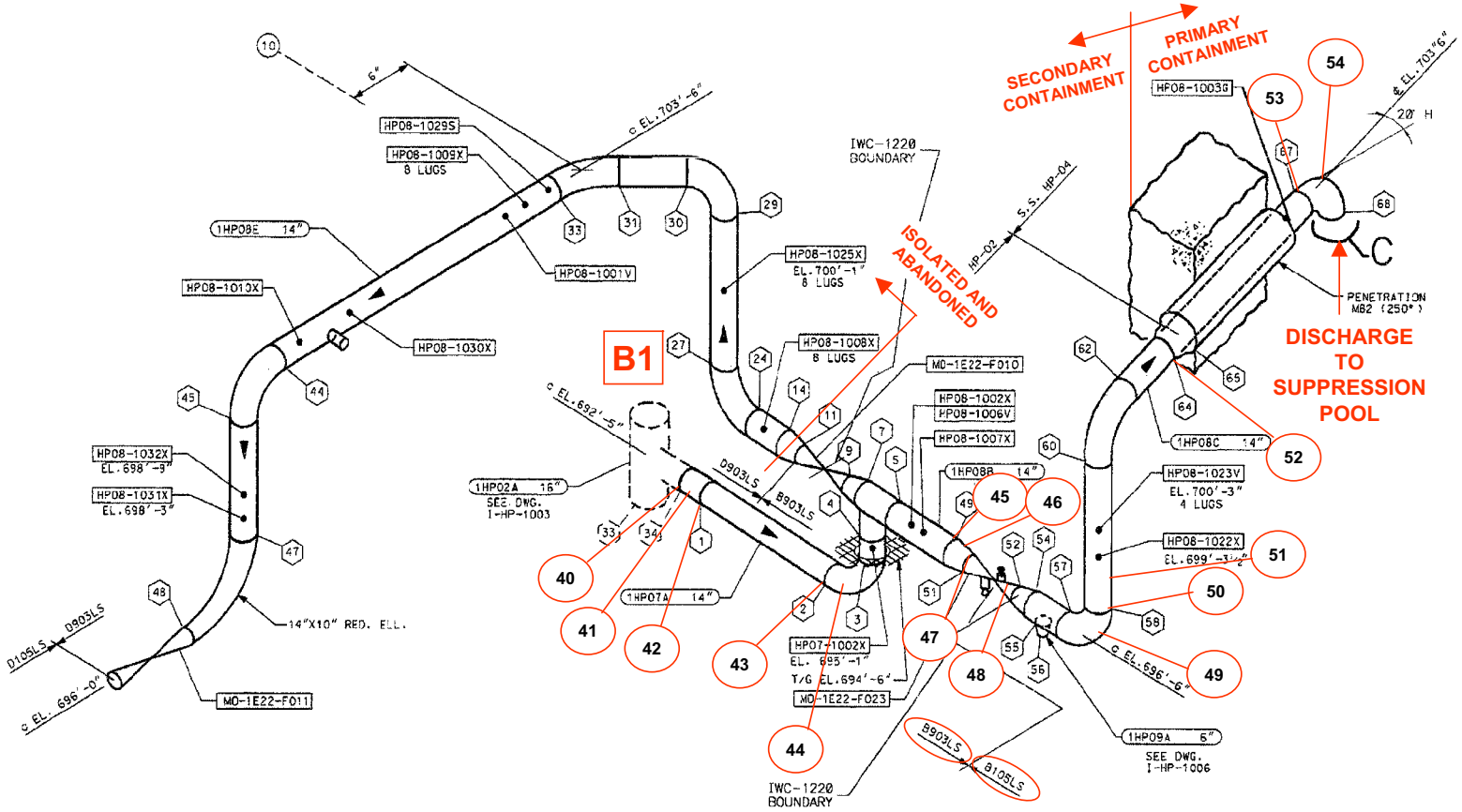

# GROUP 11 – HIGH PRESSURE CORE SPRAY (Sheet 5 of 7)
# (Covers Worksheets ECCS-HPCS – 1 thru 83)

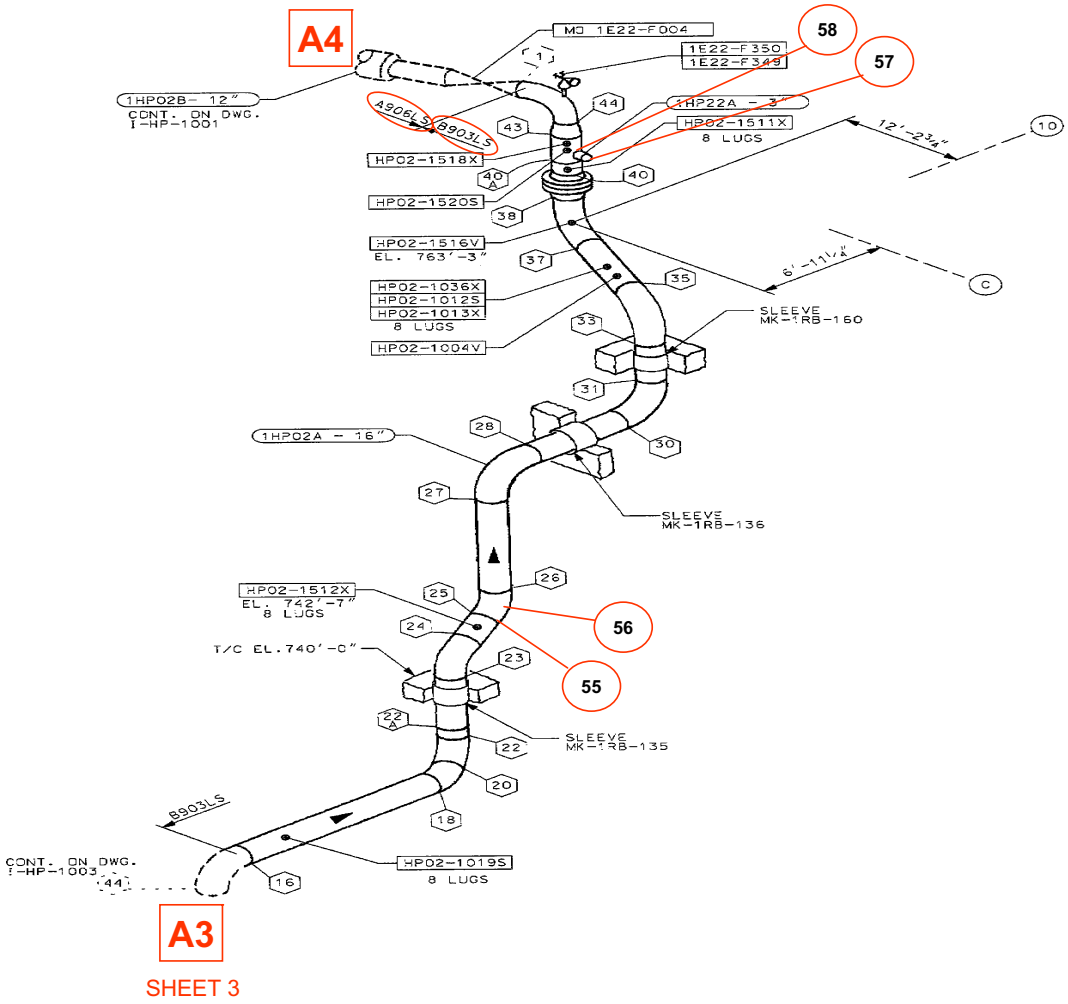

# GROUP 11 – HIGH PRESSURE CORE SPRAY (Sheet 6 of 7)
# (Covers Worksheets ECCS-HPCS – 1 thru 83)

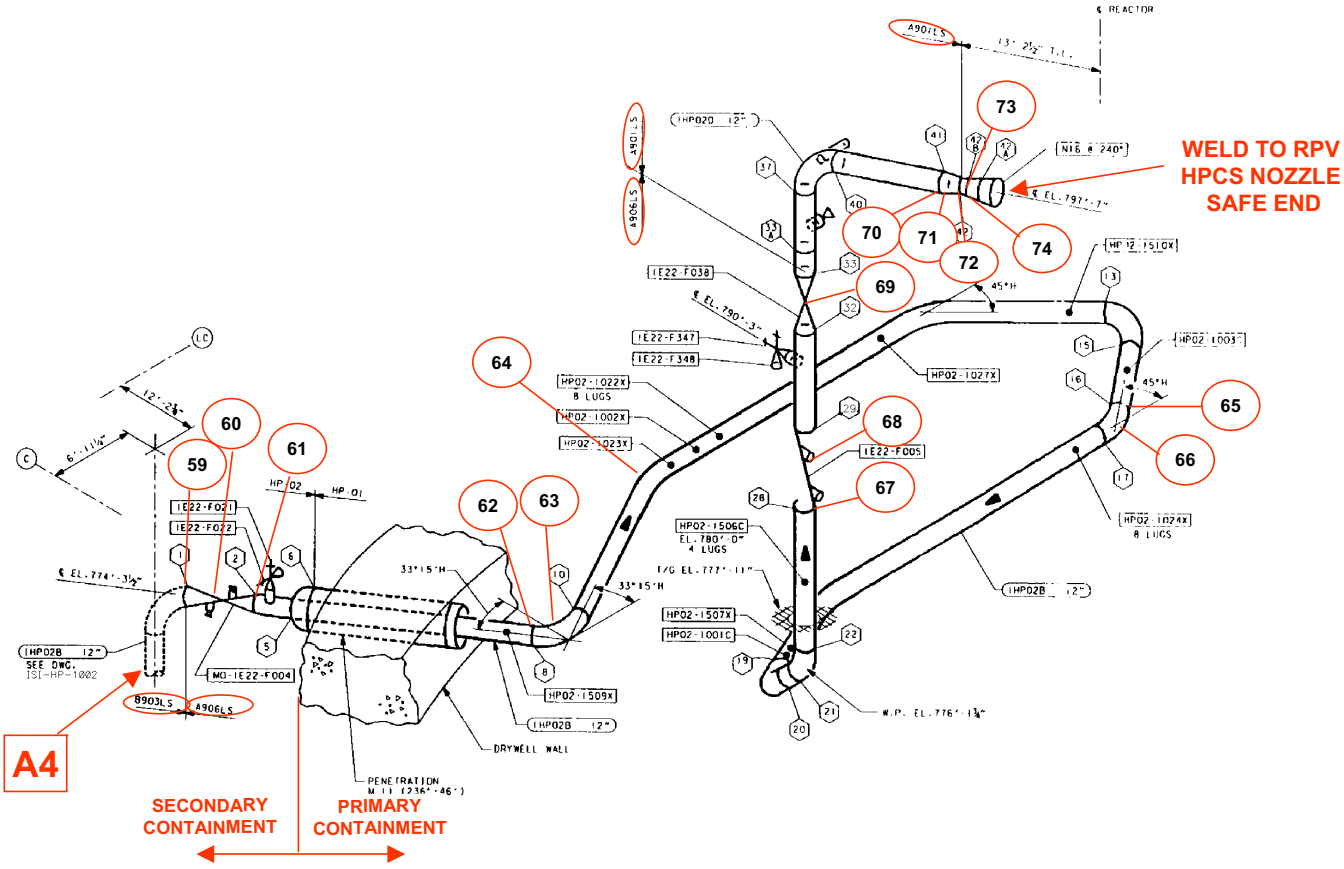

# GROUP 11 – HIGH PRESSURE CORE SPRAY (Sheet 7 of 7)
## (Covers Worksheets ECCS-HPCS – 1 thru 83)

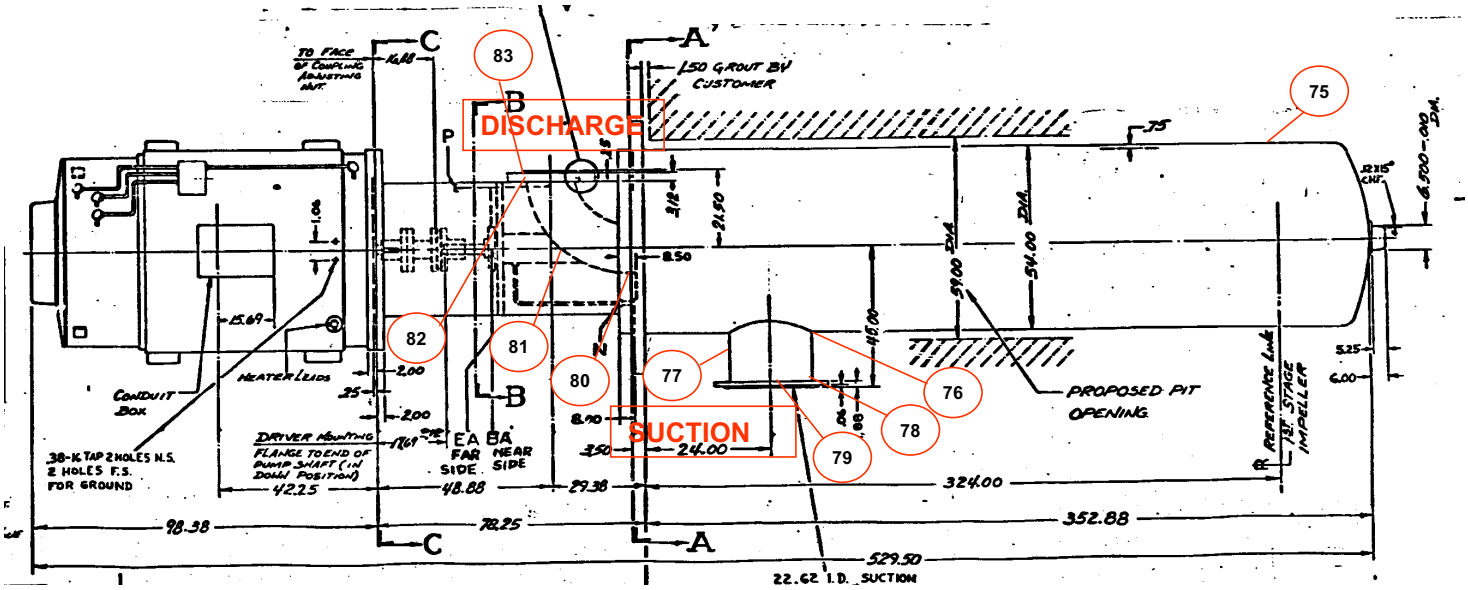


**HPCS PUMP (IE22C001)**

# GROUP 12 – REACTOR CORE ISOLOATION COOLING (Sheet 1 of 7)
## (Covers Worksheets AS-RCIC – 1 thru 80)

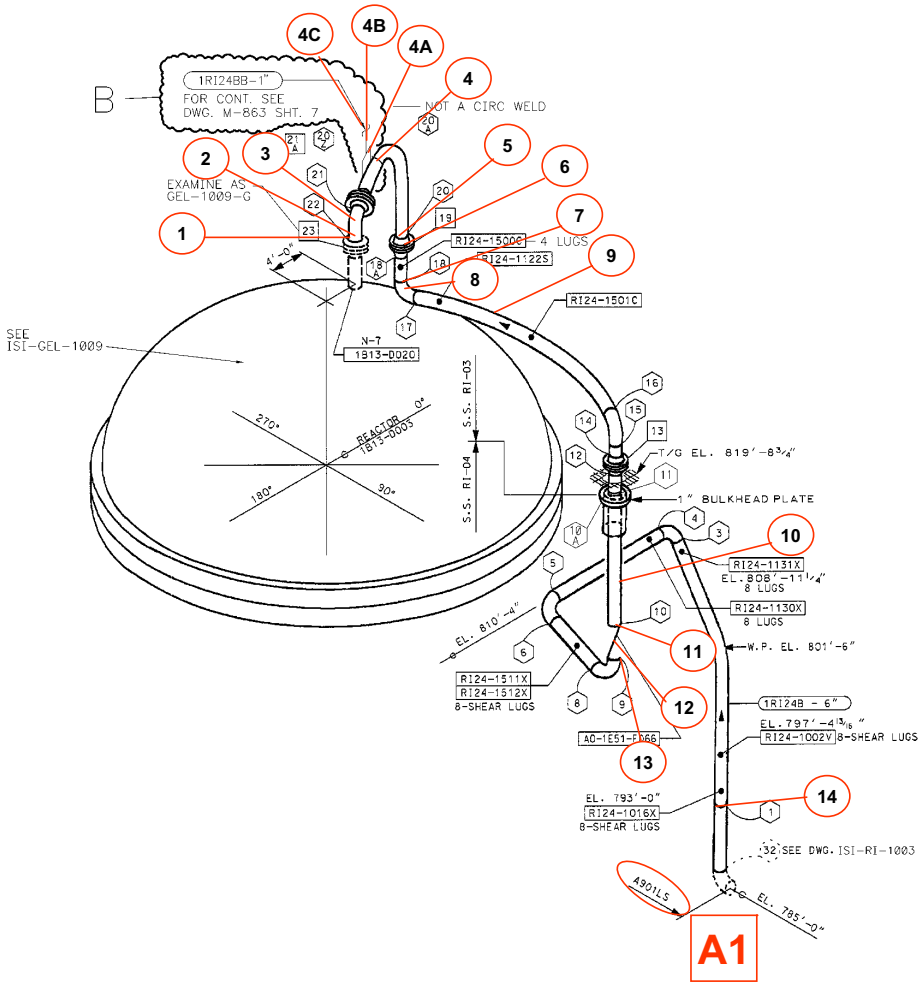

# GROUP 12 – REACTOR CORE ISOLOATION COOLING (Sheet 2 of 7)
## (Covers Worksheets AS-RCIC – 1 thru 80)

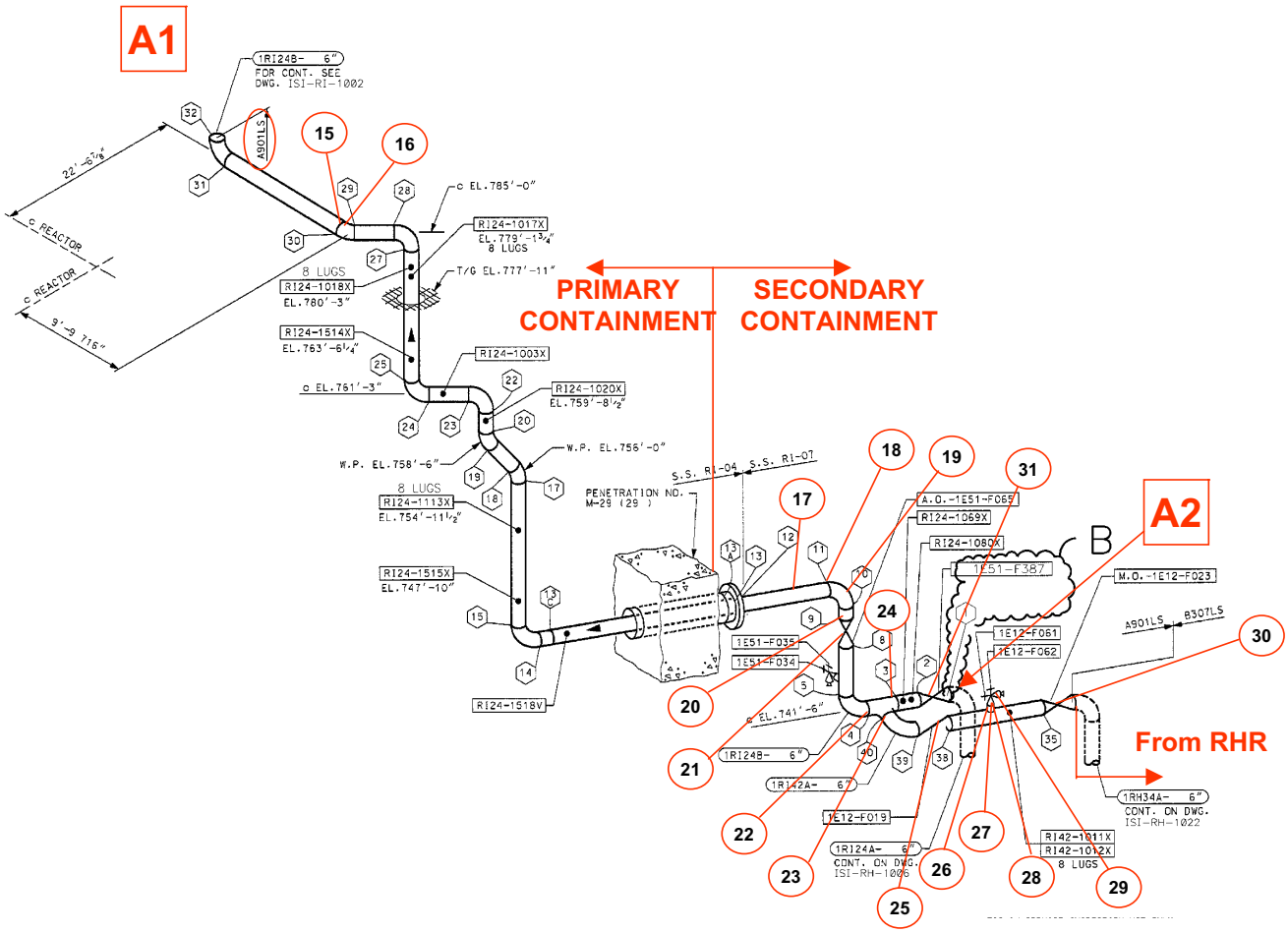

# GROUP 12 – REACTOR CORE ISOLOATION COOLING (Sheet 3 of 7)
## (Covers Worksheets AS-RCIC – 1 thru 80)

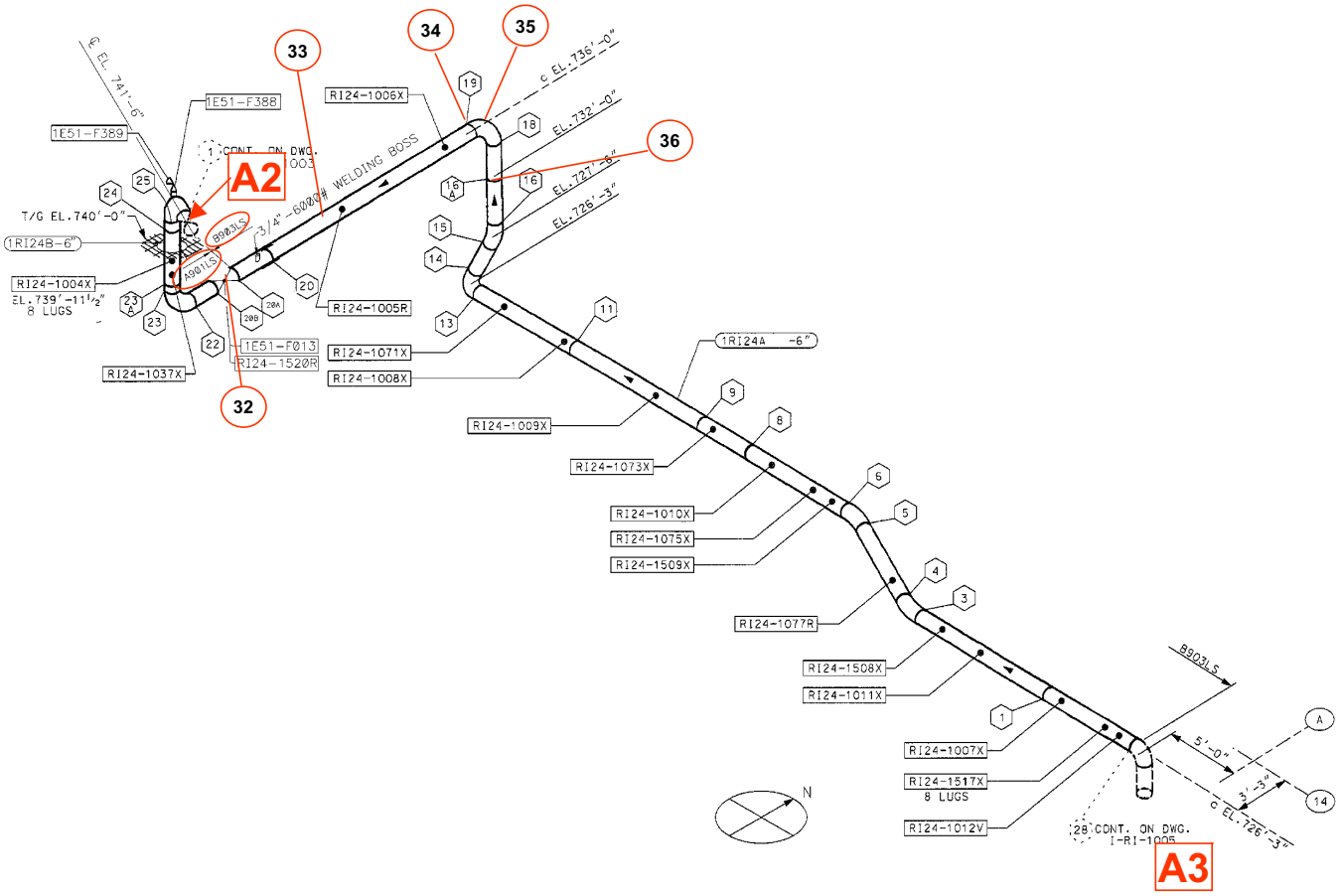

# GROUP 12 – REACTOR CORE ISOLOATION COOLING (Sheet 4 of 7)
## (Covers Worksheets AS-RCIC – 1 thru 80)

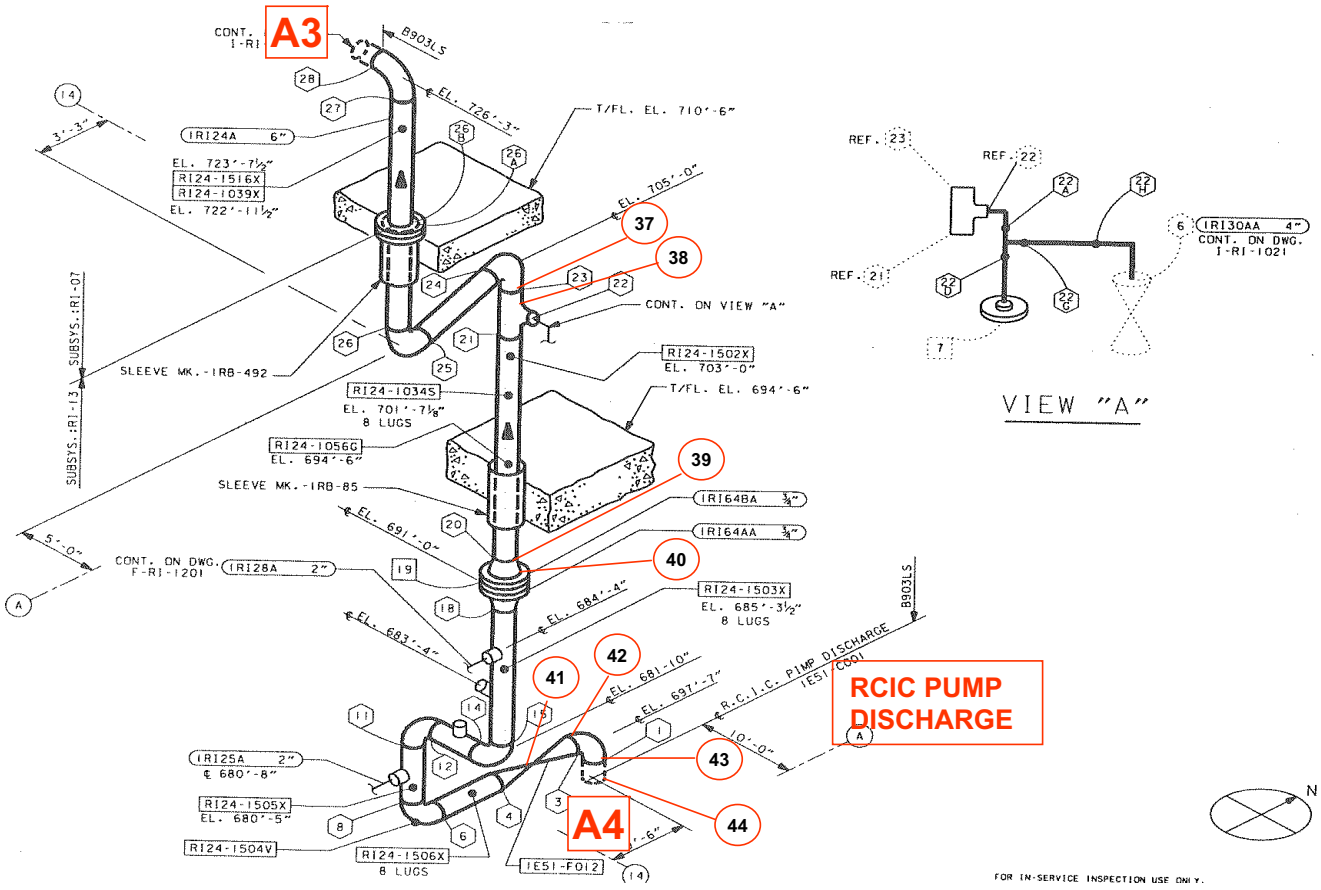

# GROUP 12 – REACTOR CORE ISOLOATION COOLING (Sheet 5 of 7)
## (Covers Worksheets AS-RCIC – 1 thru 80)

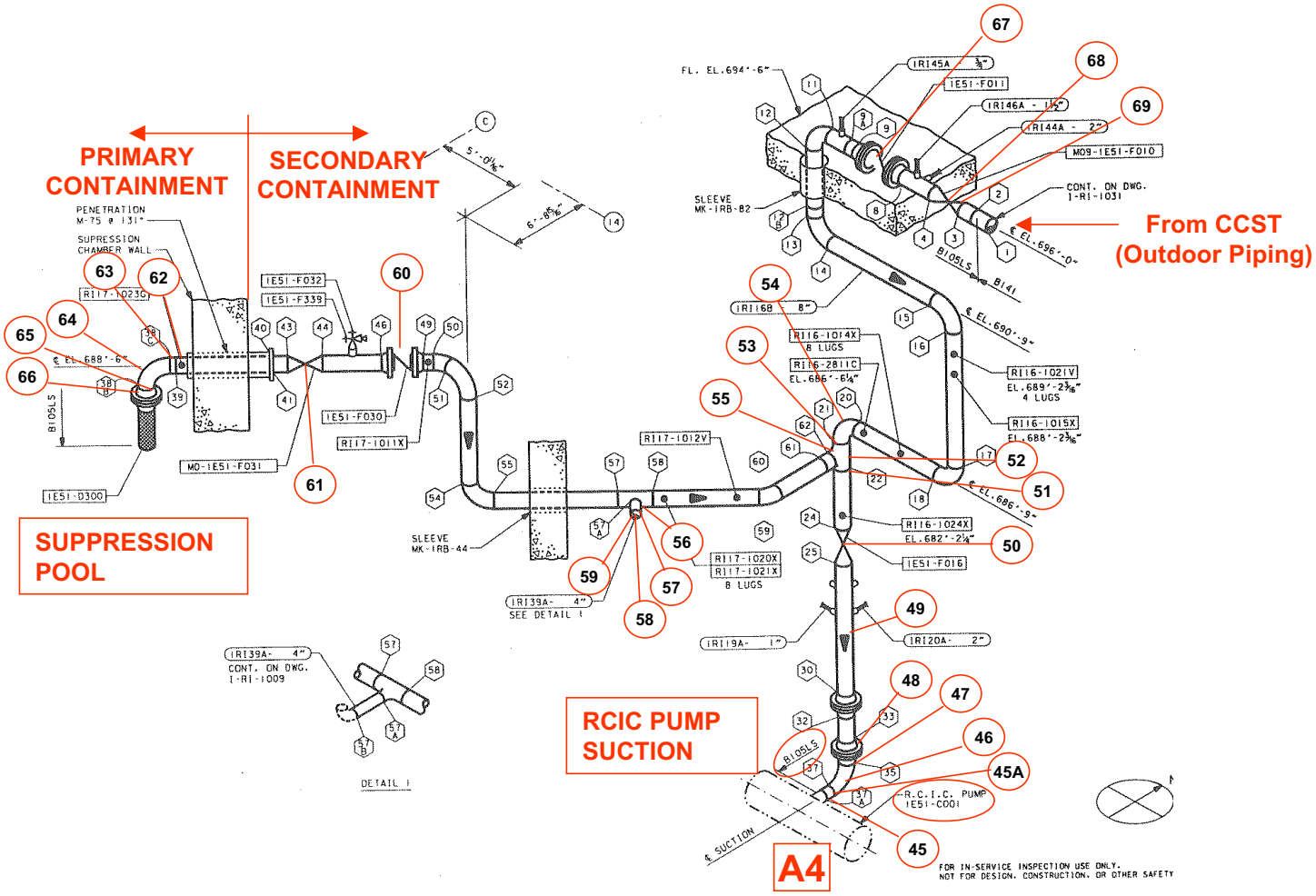

# GROUP 12 – REACTOR CORE ISOLOATION COOLING (Sheet 6 of 7)
## (Covers Worksheets AS-RCIC – 1 thru 80)

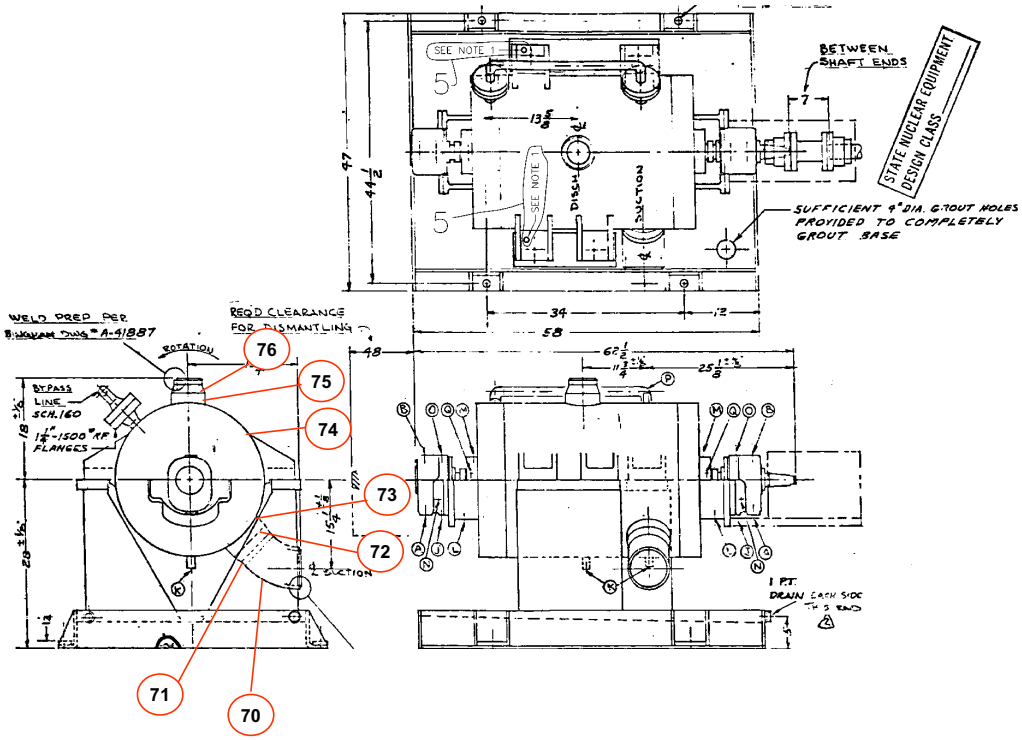


**RCIC PUMP (E51-COO1)**

# GROUP 12 – REACTOR CORE ISOLOATION COOLING (Sheet 7 of 7)
## (Covers Worksheets AS-RCIC – 1 thru 80)

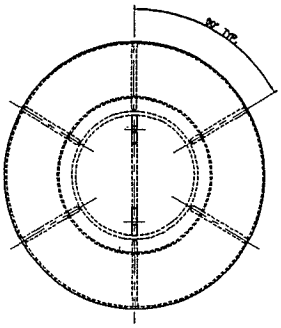


ASSEMBLY END VIEW

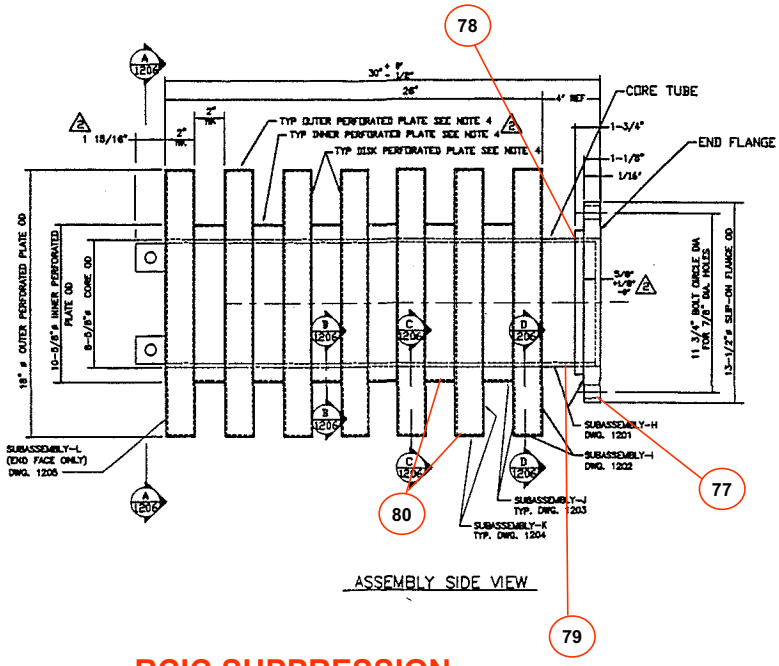


ASSEMBLY SIDE VIEW

**RCIC SUPPRESSION POOL STRAINER IE51-D300**

# GROUP 13 – RESIDUAL HEAT REMOVAL

## SUPPRESSION POOL PIPING TO RHR PUMP (Sheet 1 of 4)

## (Covers Worksheets ESF-RHRPMPS – 1 thru 58)

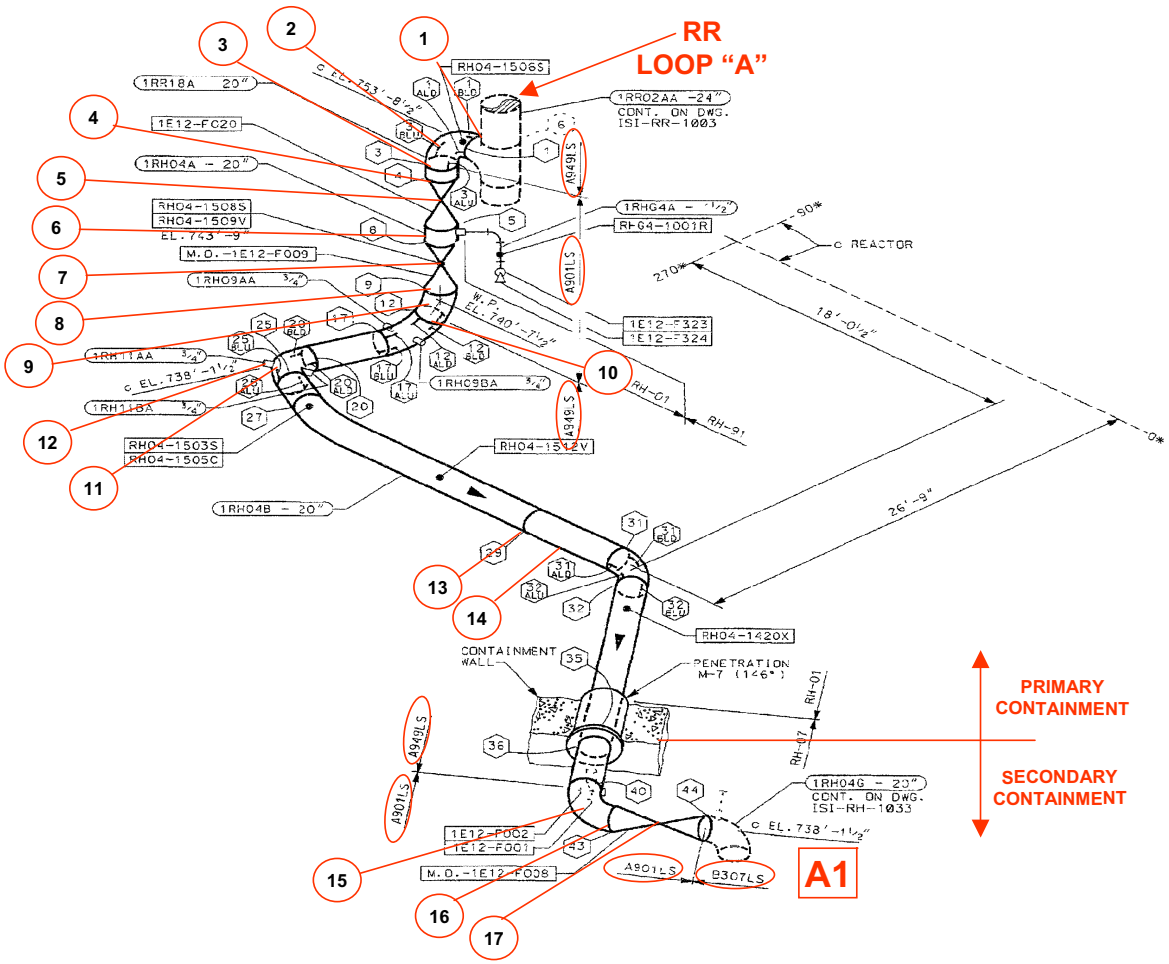

# GROUP 13 – RESIDUAL HEAT REMOVAL

## SUPPRESSION POOL PIPING TO RHR PUMP (Sheet 2 of 4)

## (Covers Worksheets ESF-RHRPMPS – 1 thru 58)

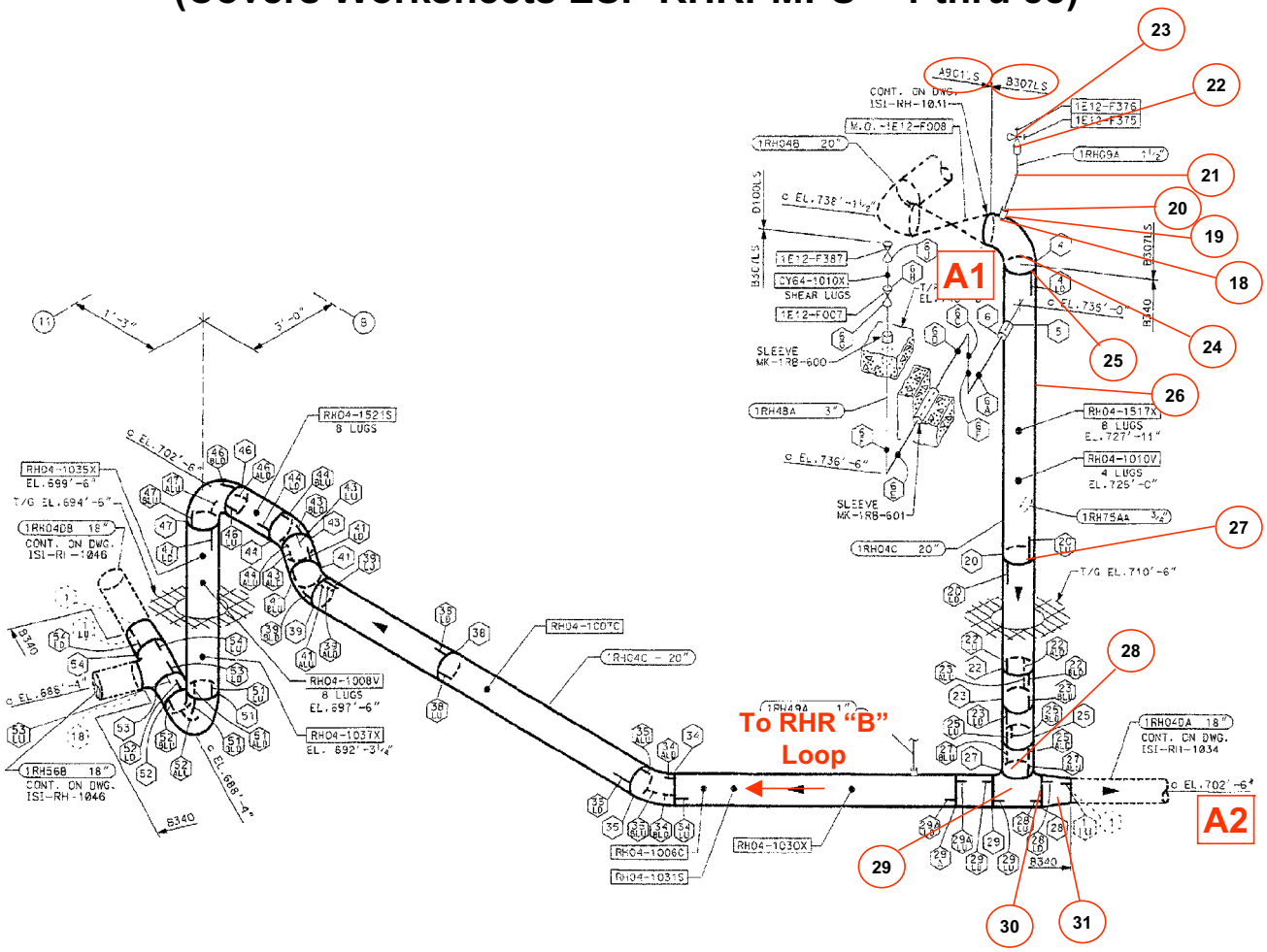

# GROUP 13 – RESIDUAL HEAT REMOVAL
## SUPPRESSION POOL PIPING TO RHR PUMP (Sheet 3 of 4)
## (Covers Worksheets ESF-RHRPMPS – 1 thru 58)

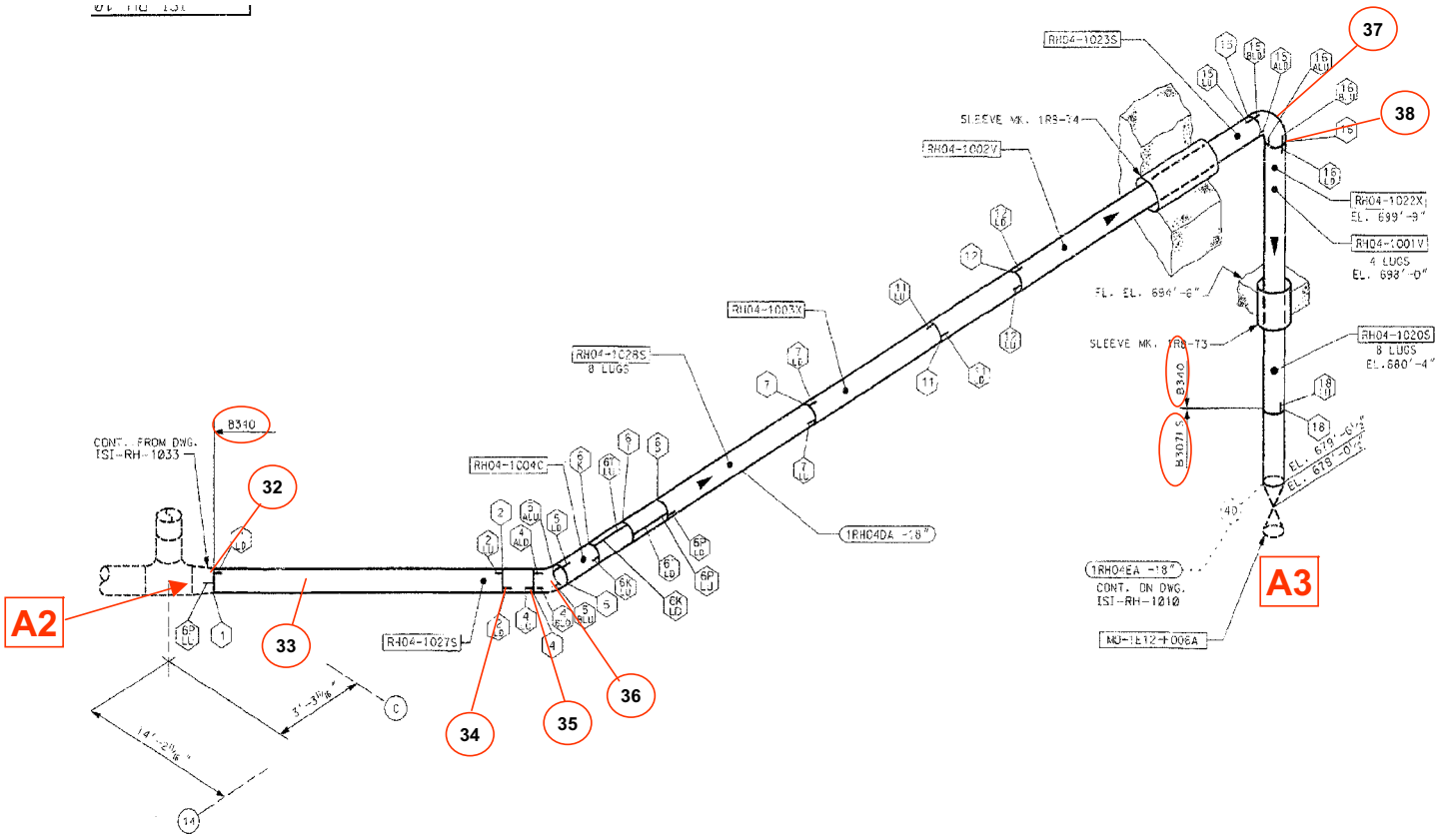

# GROUP 13 – RESIDUAL HEAT REMOVAL

## SUPPRESSION POOL PIPING TO RHR PUMP (Sheet 4 of 4)

## (Covers Worksheets ESF-RHRPMPS – 1 thru 58)

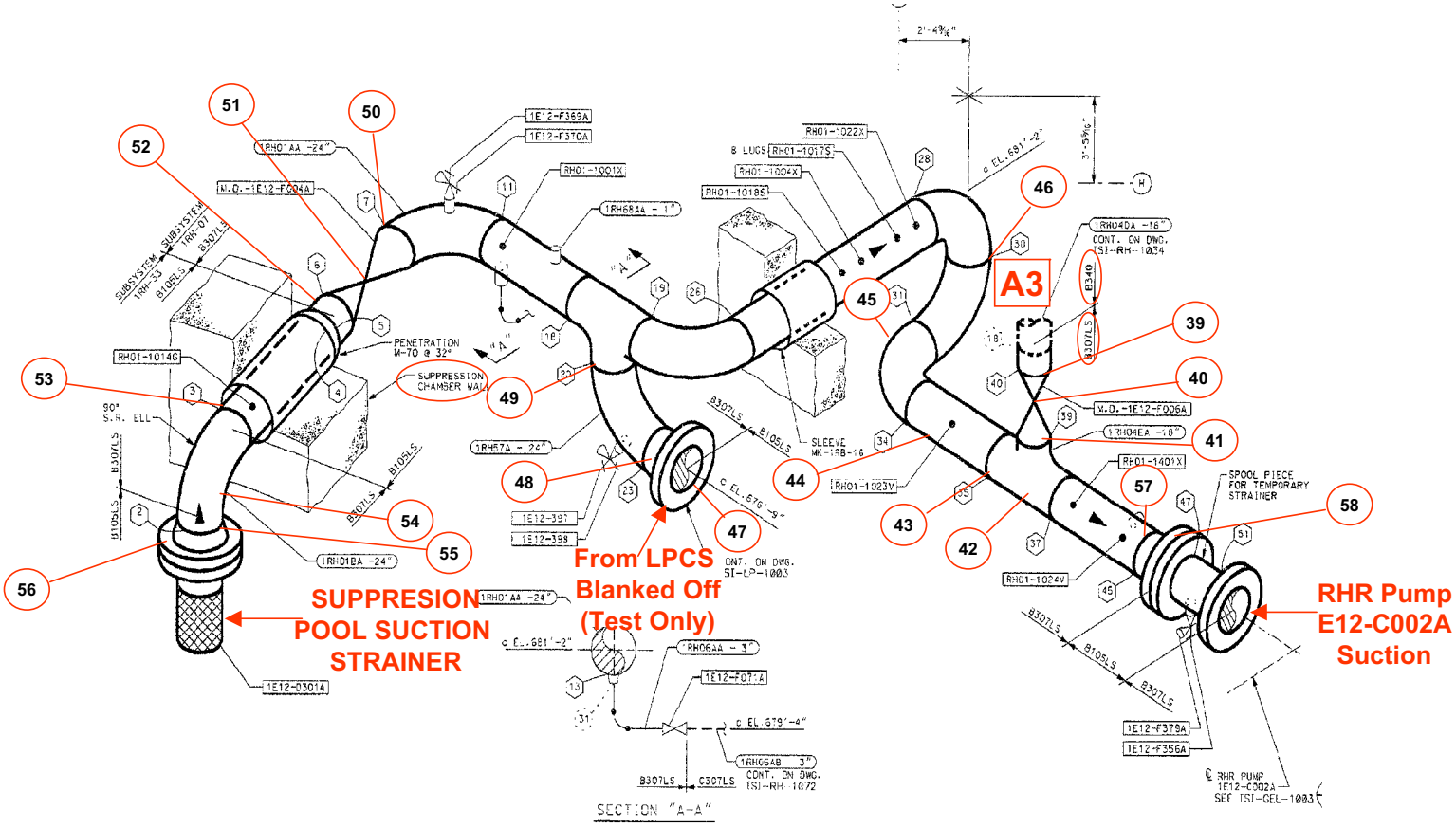

# GROUP 14 – RESIDUAL HEAT REMOVAL
# RHR PUMP To RHR HX (Sheet 1 of 6)
# (Covers Worksheets ESF-RHRPMPHX – 1 thru 78)

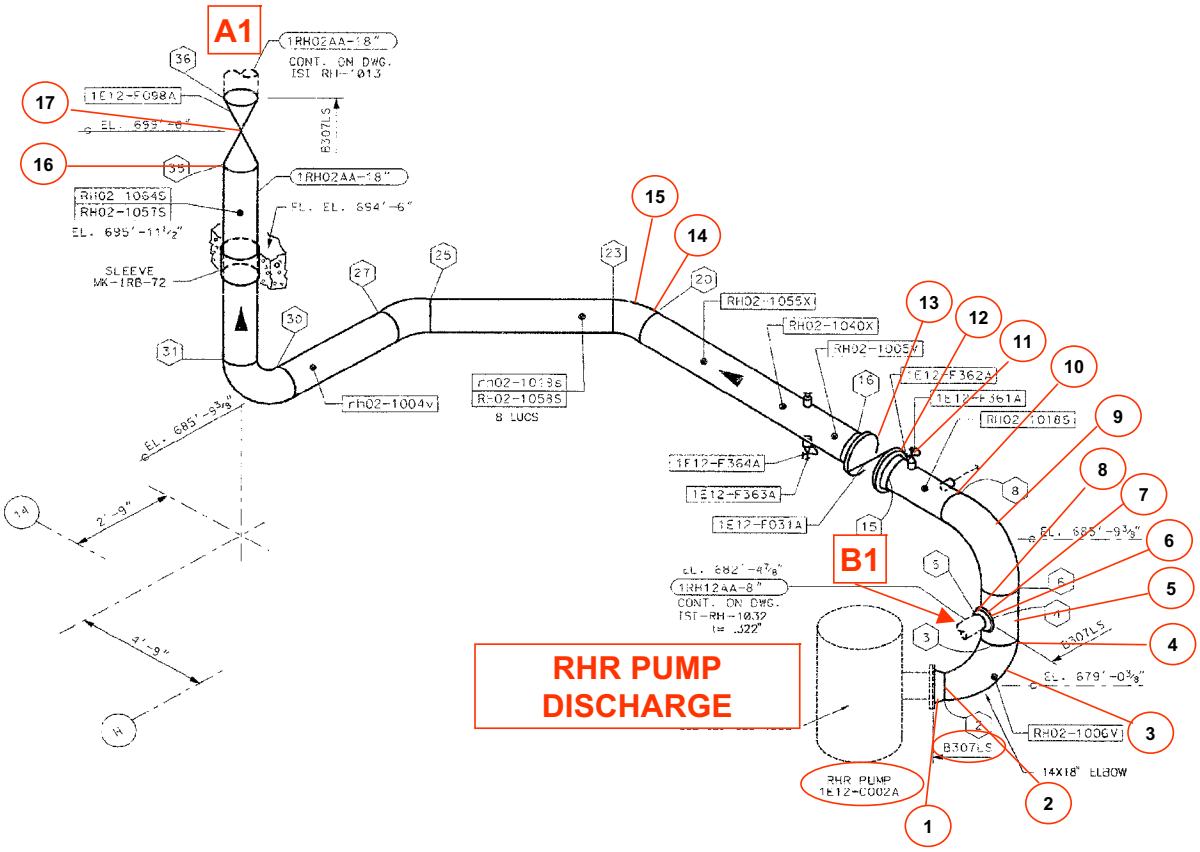

# GROUP 14 – RESIDUAL HEAT REMOVAL
# RHR PUMP To RHR HX (Sheet 2 of 6)
# (Covers Worksheets ESF-RHRPMPHX – 1 thru 78)

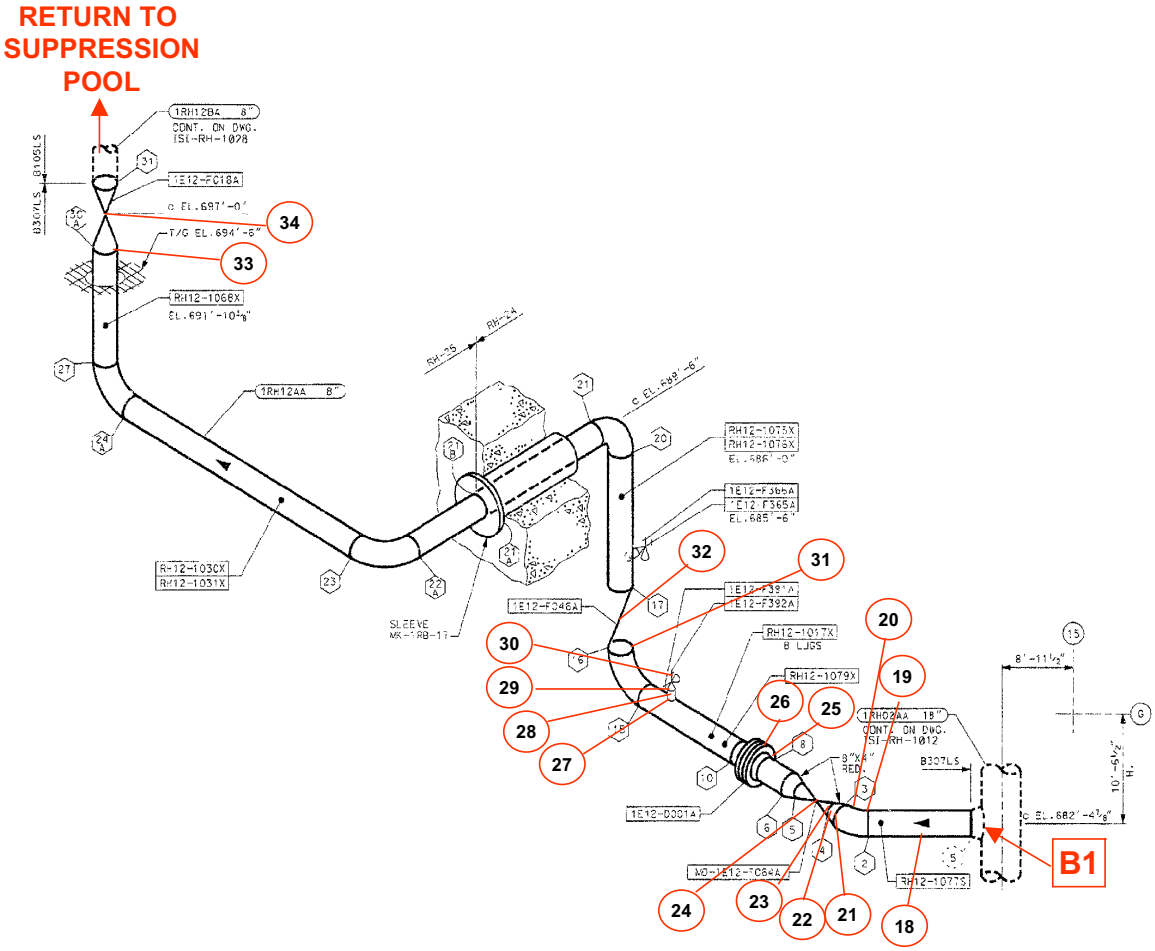

# GROUP 14 – RESIDUAL HEAT REMOVAL
# RHR PUMP To RHR HX (Sheet 3 of 6)
# (Covers Worksheets ESF-RHRPMPHX – 1 thru 78)

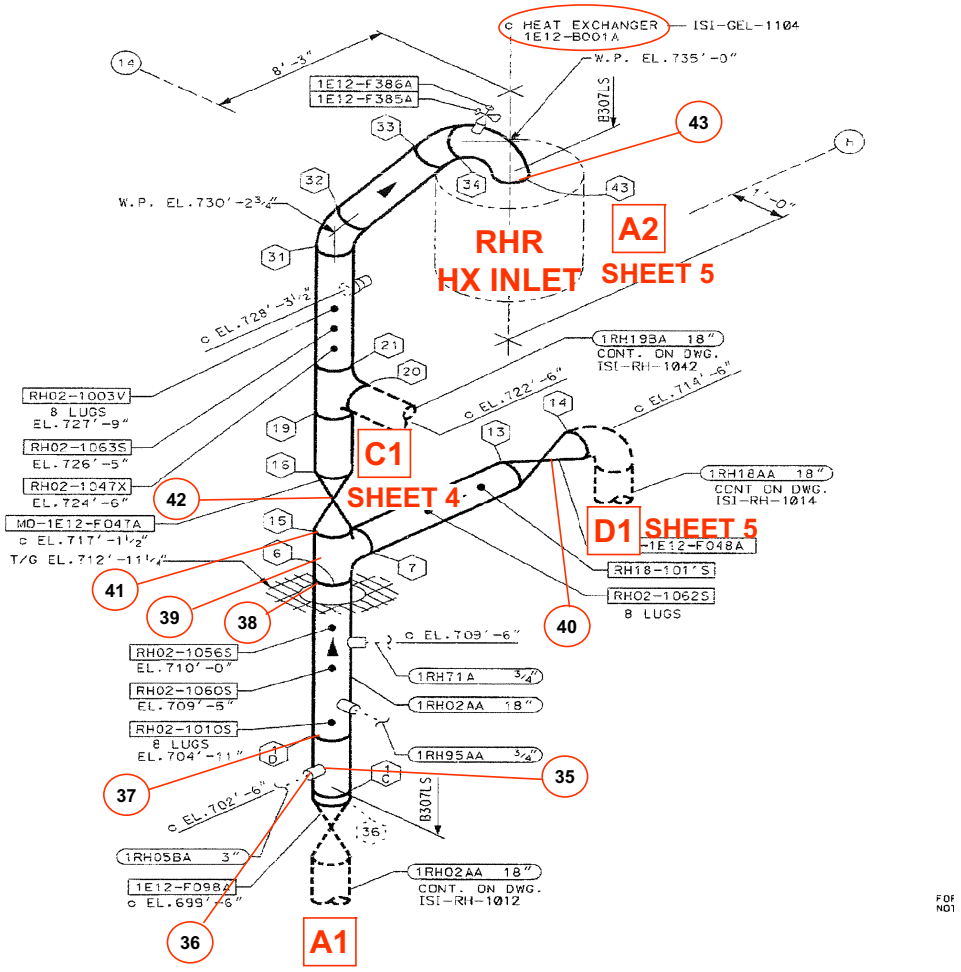

# GROUP 14 – RESIDUAL HEAT REMOVAL
# RHR PUMP To RHR HX (Sheet 4 of 6)
# (Covers Worksheets ESF-RHRPMPHX – 1 thru 78)

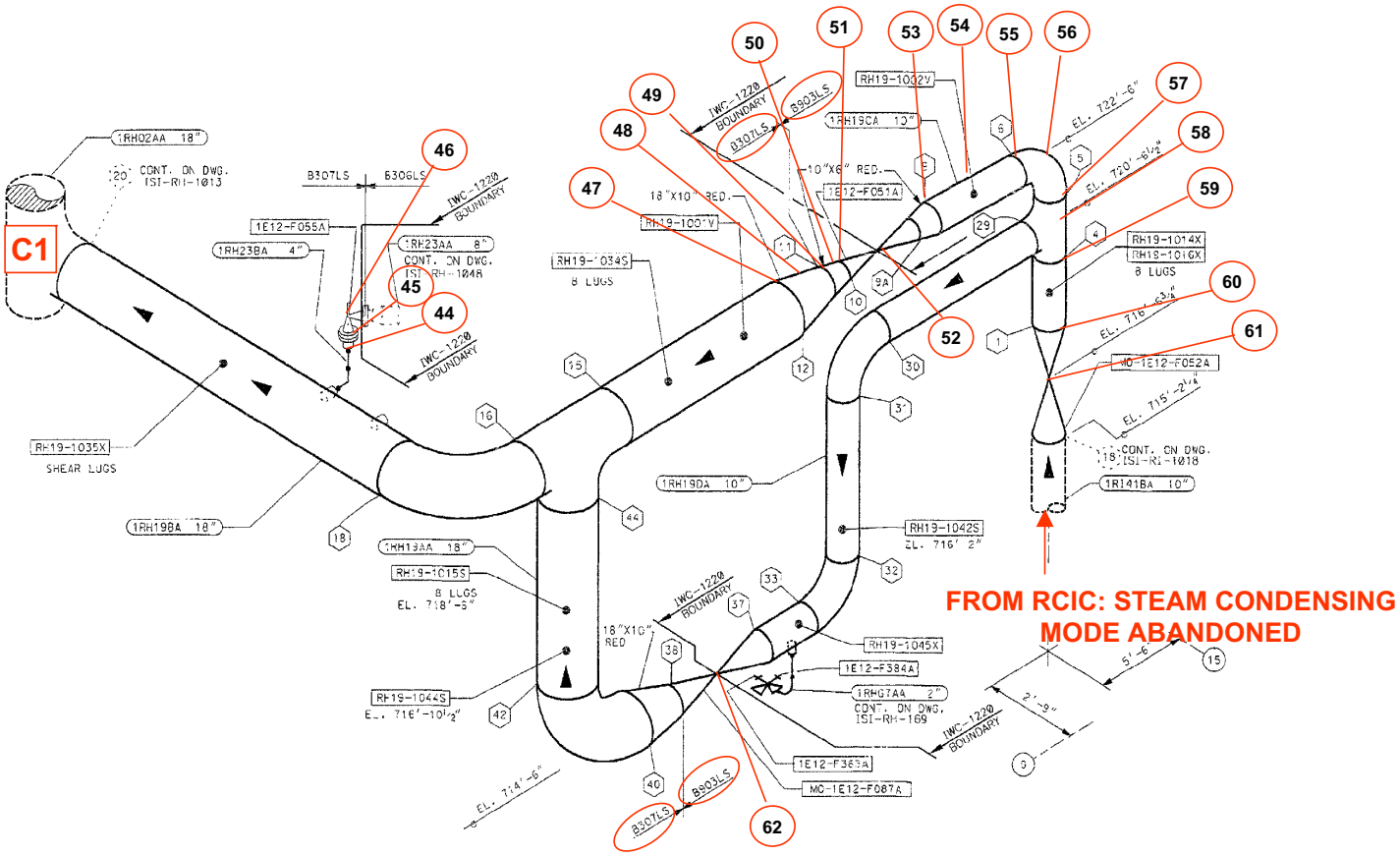

# GROUP 14 – RESIDUAL HEAT REMOVAL
## RHR PUMP To RHR HX (Sheet 5 of 6)
## (Covers Worksheets ESF-RHRPMPHX – 1 thru 78)

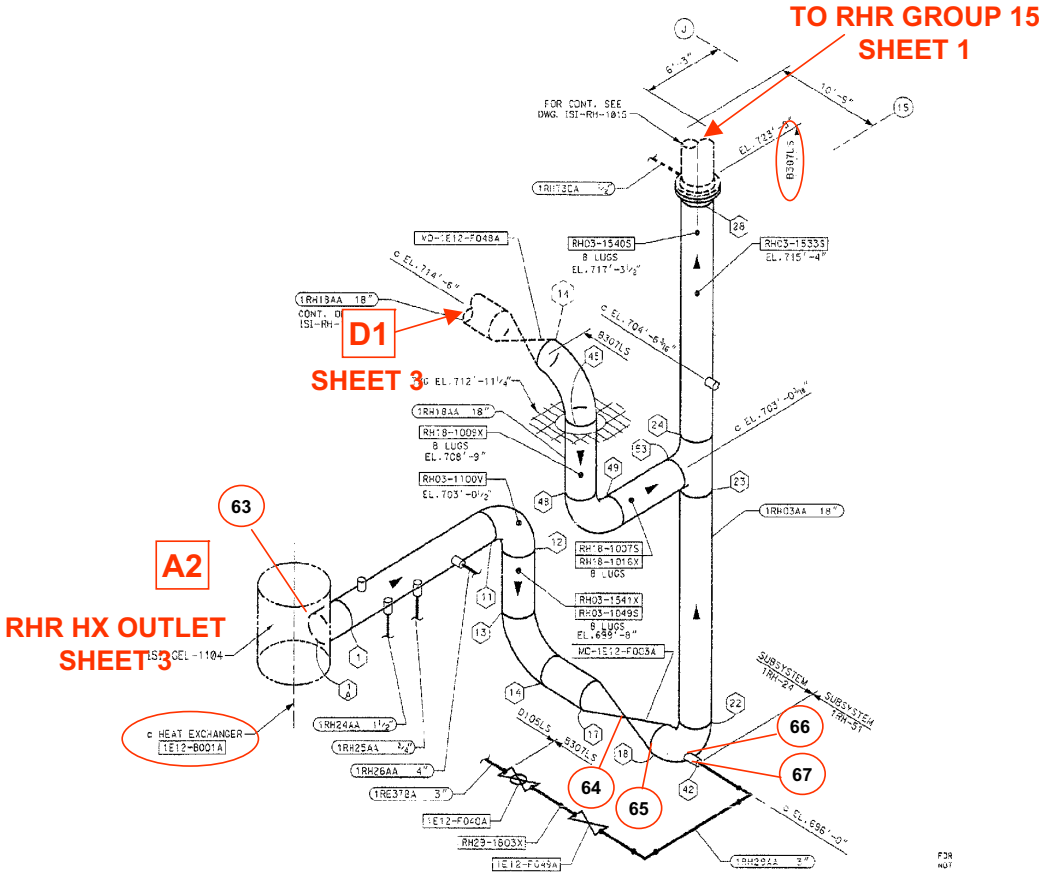

# GROUP 14 – RESIDUAL HEAT REMOVAL
## RHR PUMP To RHR HX (Sheet 6 of 6)
## (Covers Worksheets ESF-RHRPMPHX – 1 thru 78)

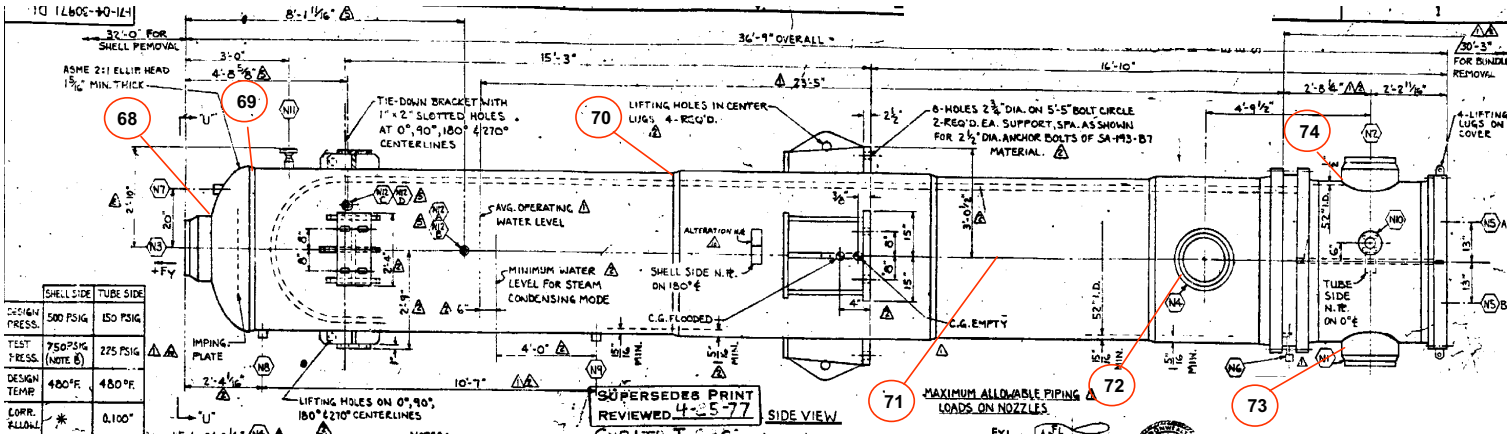


**RHR HX**
**E12-BOO1A**

75 **HX TUBES**

76 **TUBE SHEET**

77 **FITTINGS**

78 **SUPPORTS (OUTSIDE)**

# GROUP 15 – RESIDUAL HEAT REMOVAL NORMAL SHUTDOWN PIPING (Sheet 1 of 7)

## (Covers Worksheets ESF-RHRSHTDWN – 1 thru 71)

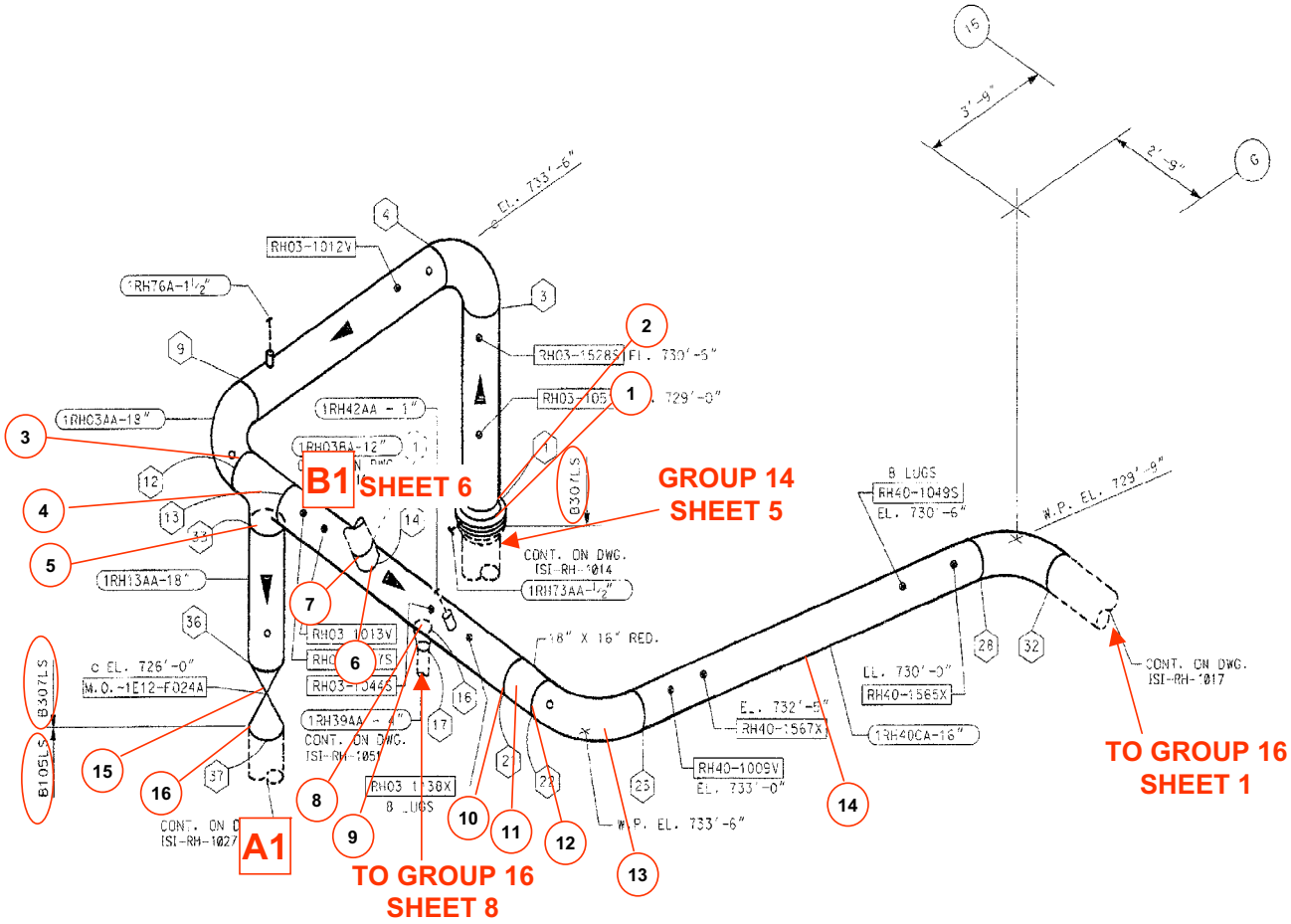

# GROUP 15 – RESIDUAL HEAT REMOVAL NORMAL SHUTDOWN PIPING (Sheet 2 of 7) (Covers Worksheets ESF-RHRSHTDWN – 1 thru 71)

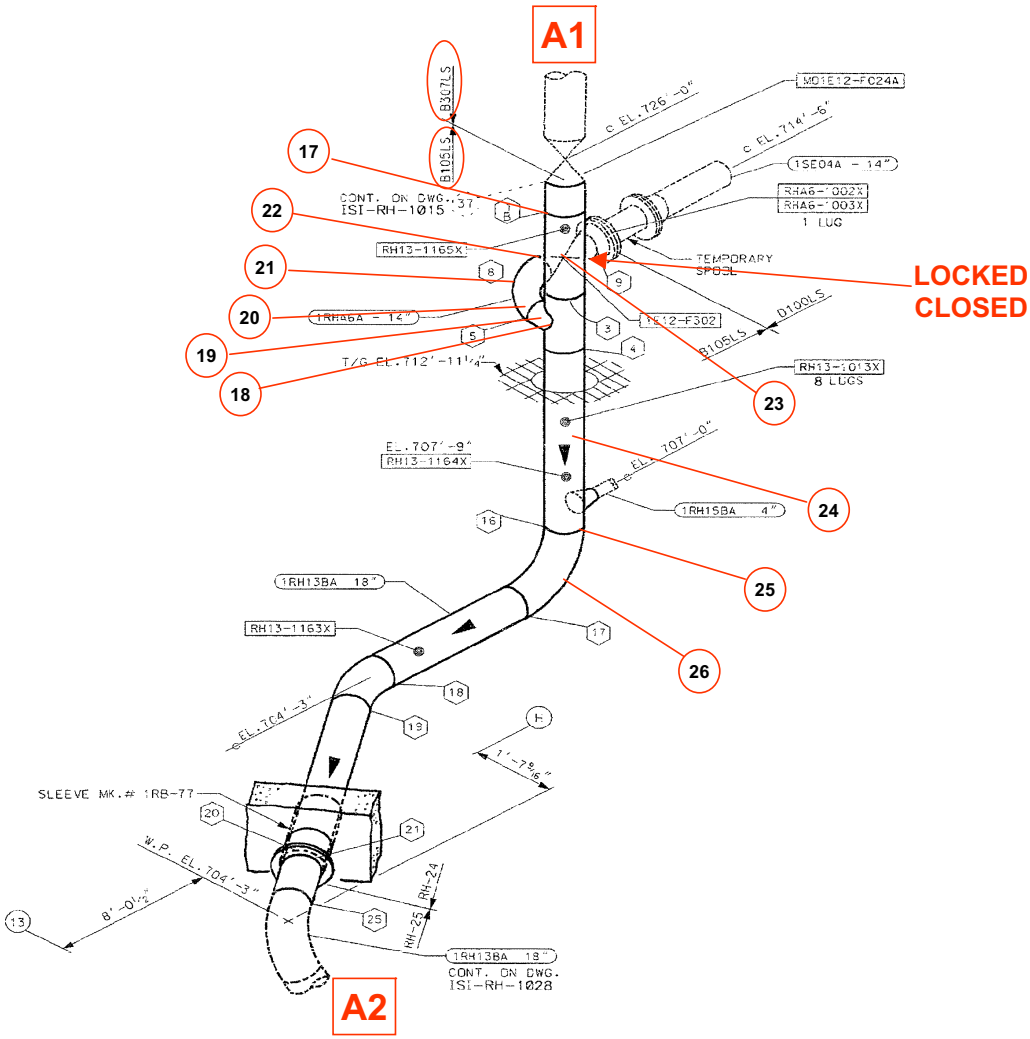

# GROUP 15 – RESIDUAL HEAT REMOVAL NORMAL SHUTDOWN PIPING (Sheet 3 of 7) (Covers Worksheets ESF-RHRSHTDWN – 1 thru 71)

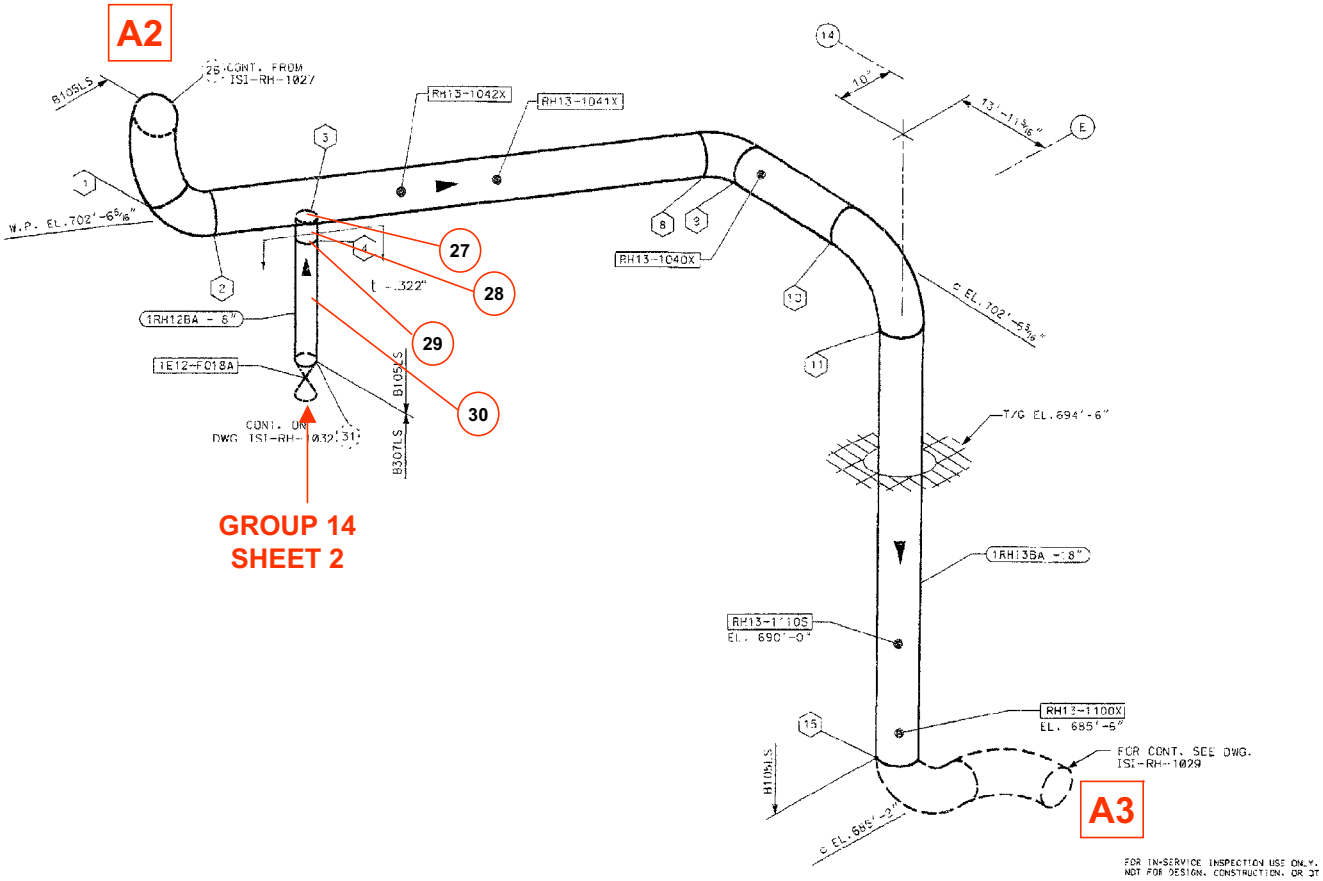

# GROUP 15 – RESIDUAL HEAT REMOVAL NORMAL SHUTDOWN PIPING (Sheet 4 of 7) (Covers Worksheets ESF-RHRSHTDWN – 1 thru 71)

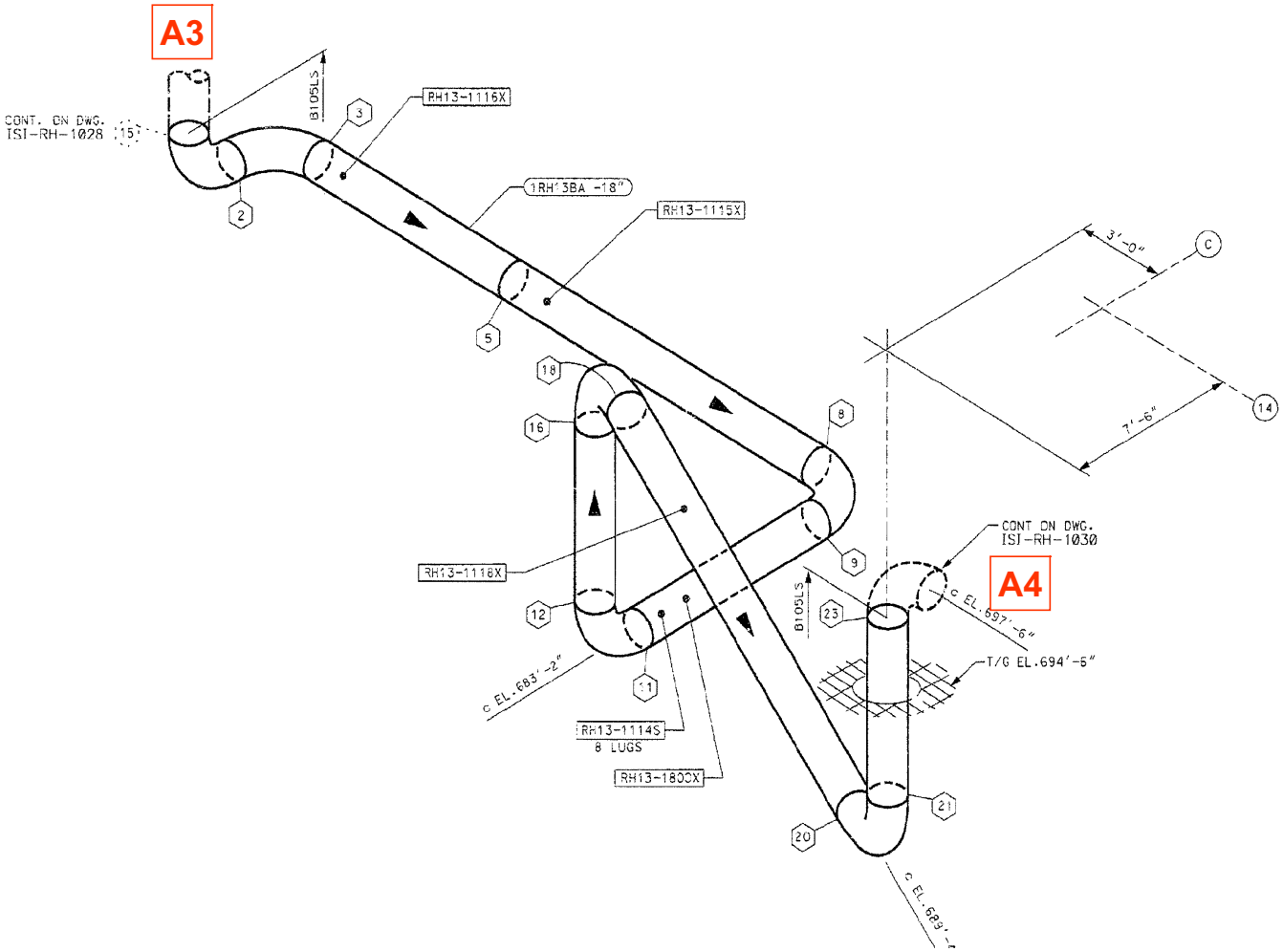

# GROUP 15 – RESIDUAL HEAT REMOVAL NORMAL SHUTDOWN PIPING (Sheet 5 of 7) (Covers Worksheets ESF-RHRSHTDWN – 1 thru 71)

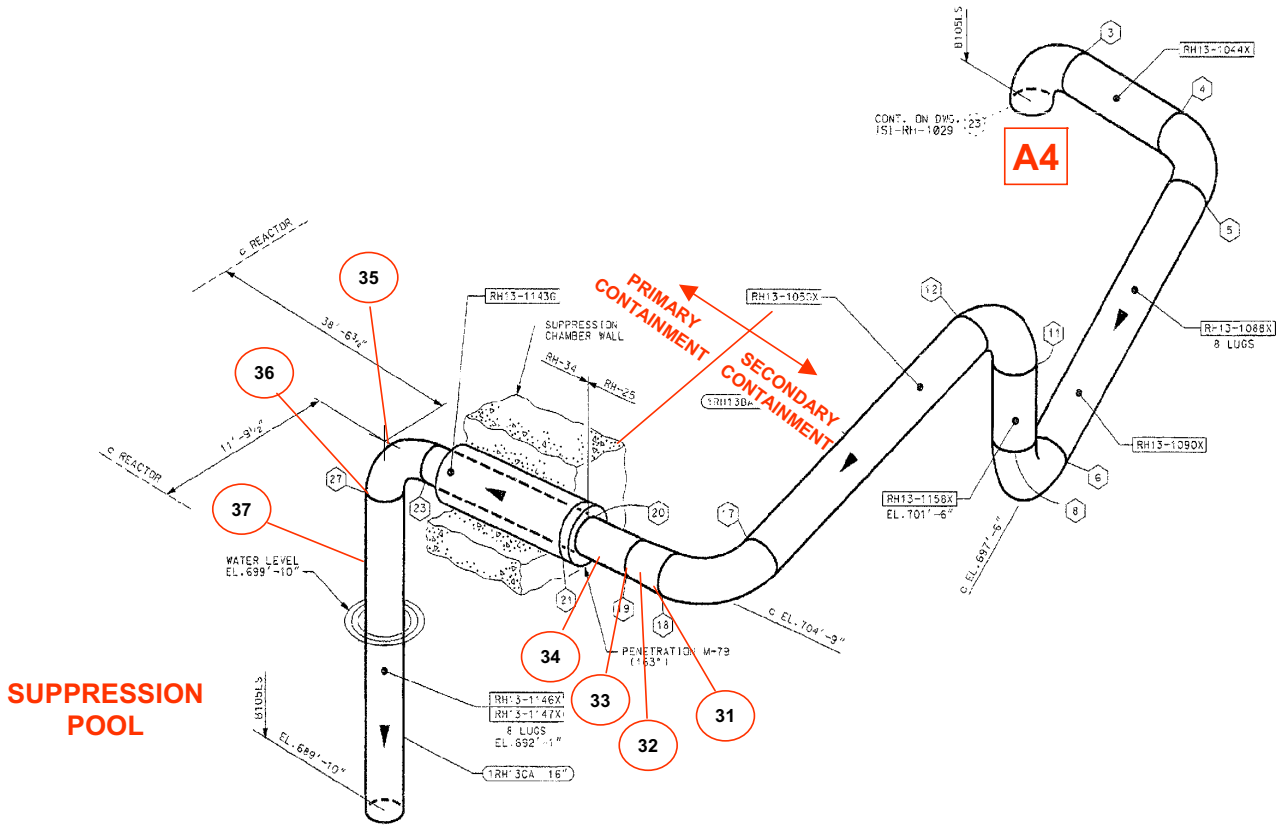

# GROUP 15 – RESIDUAL HEAT REMOVAL NORMAL SHUTDOWN PIPING (Sheet 6 of 7)

## (Covers Worksheets ESF-RHRSHTDWN – 1 thru 71)

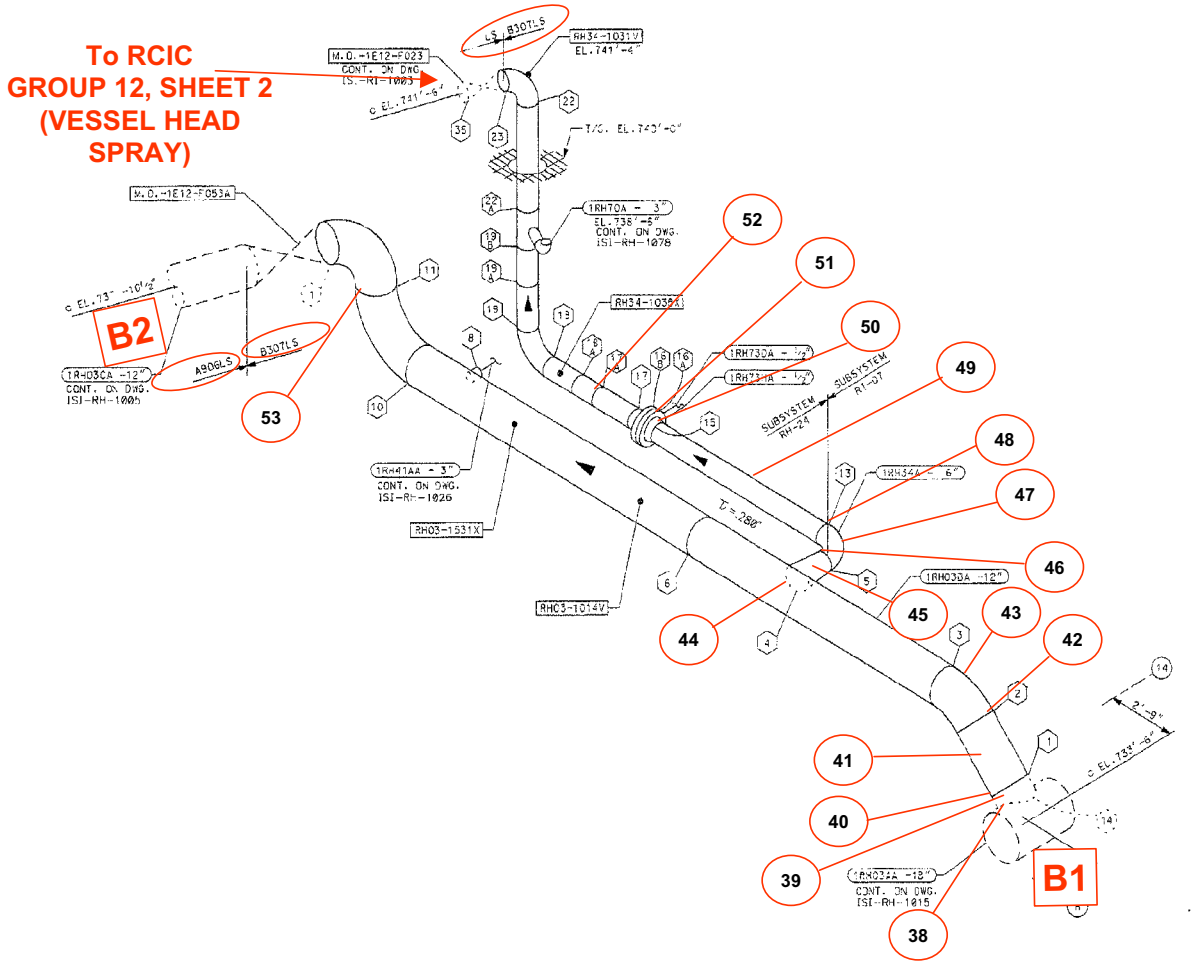

# GROUP 15 – RESIDUAL HEAT REMOVAL NORMAL SHUTDOWN PIPING (Sheet 7 of 7)
## (Covers Worksheets ESF-RHRSHTDWN – 1 thru 71)

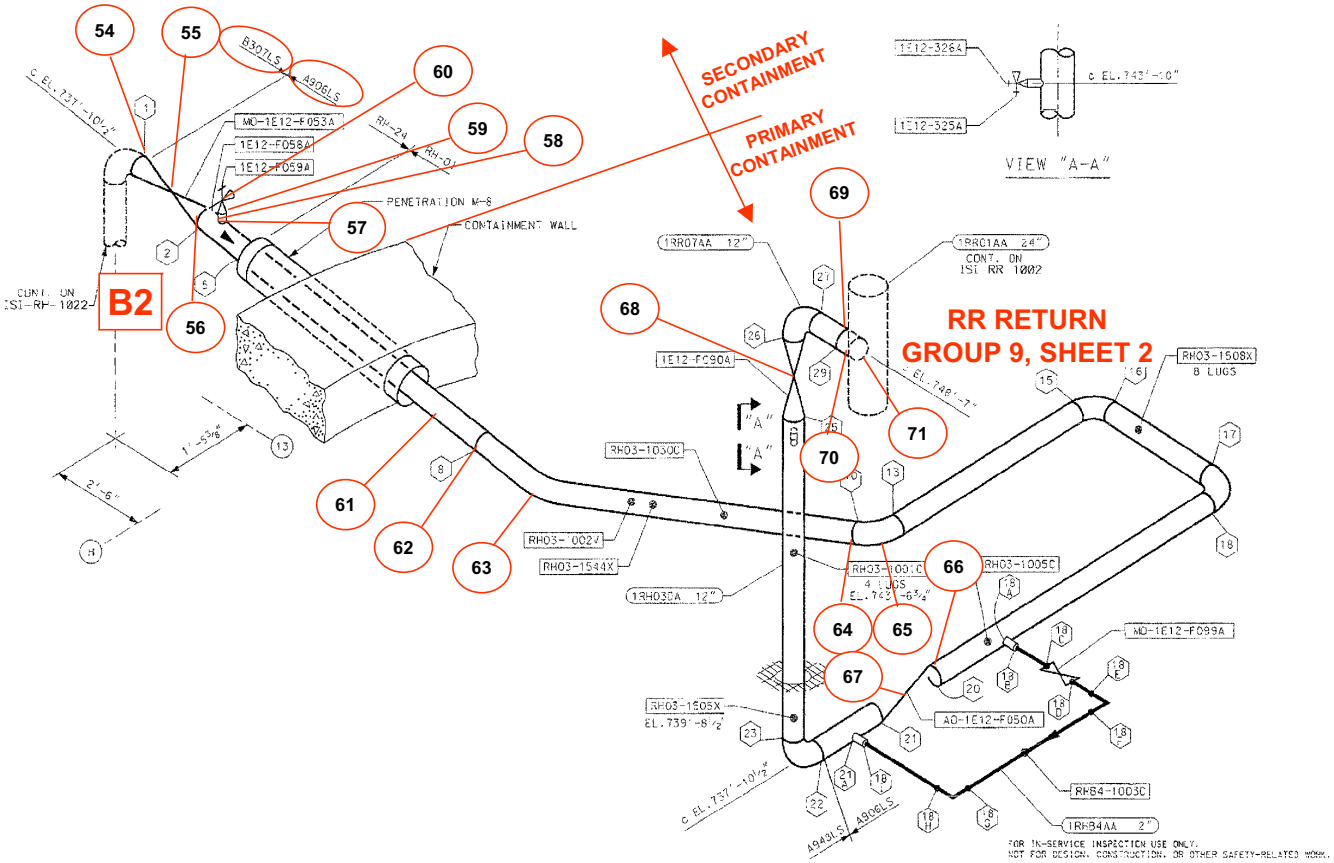

# GROUP 16 – RESIDUAL HEAT REMOVAL SPRAY PIPING (Sheet 1 of 8)
## (Covers Worksheets ESF-RHRSPRAY – 1 thru 73)

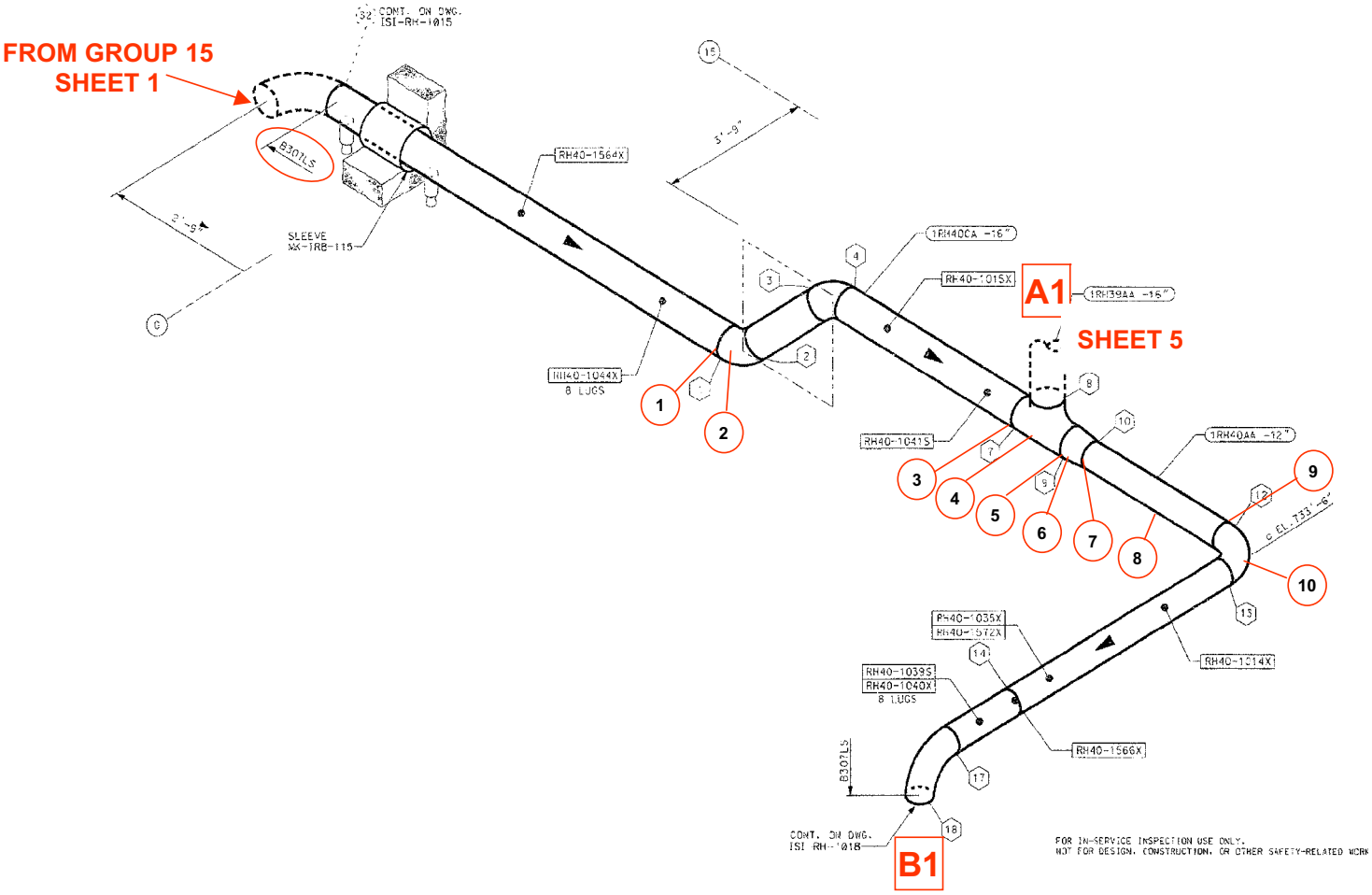

# GROUP 16 – RESIDUAL HEAT REMOVAL SPRAY PIPING (Sheet 2 of 8)
## (Covers Worksheets ESF-RHRSPRAY – 1 thru 73)

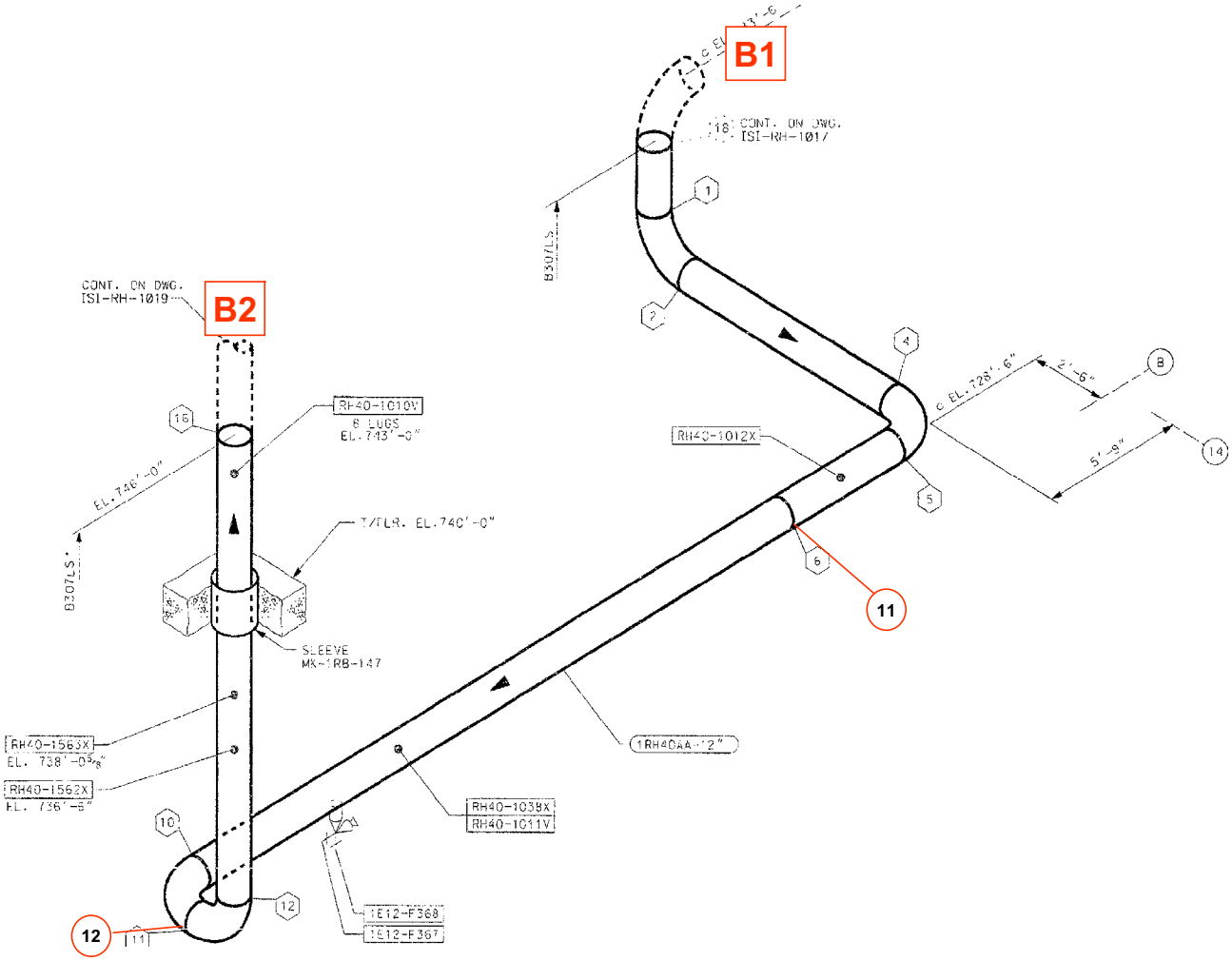

# GROUP 16 – RESIDUAL HEAT REMOVAL SPRAY PIPING (Sheet 3 of 8) (Covers Worksheets ESF-RHRSPRAY – 1 thru 73)

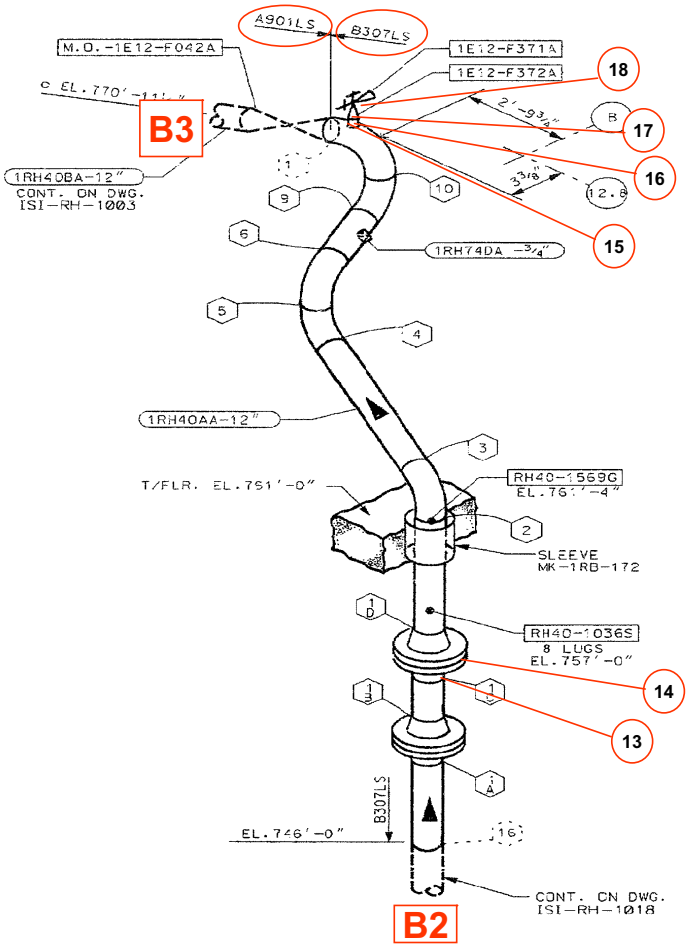

# GROUP 16 – RESIDUAL HEAT REMOVAL SPRAY PIPING (Sheet 4 of 8) (Covers Worksheets ESF-RHRSPRAY – 1 thru 73)

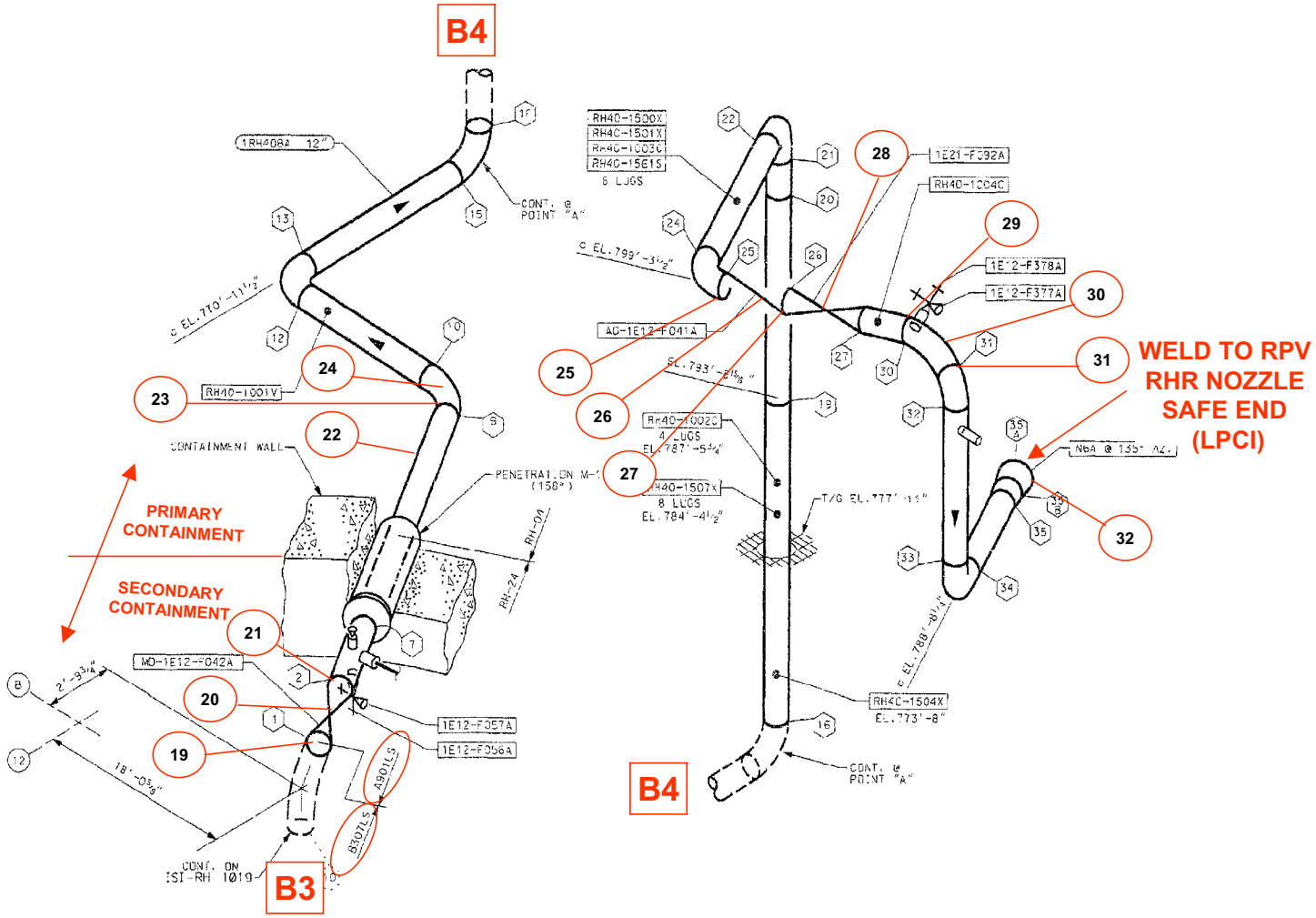

# GROUP 16 – RESIDUAL HEAT REMOVAL SPRAY PIPING (Sheet 5 of 8)
# (Covers Worksheets ESF-RHRSPRAY – 1 thru 73)

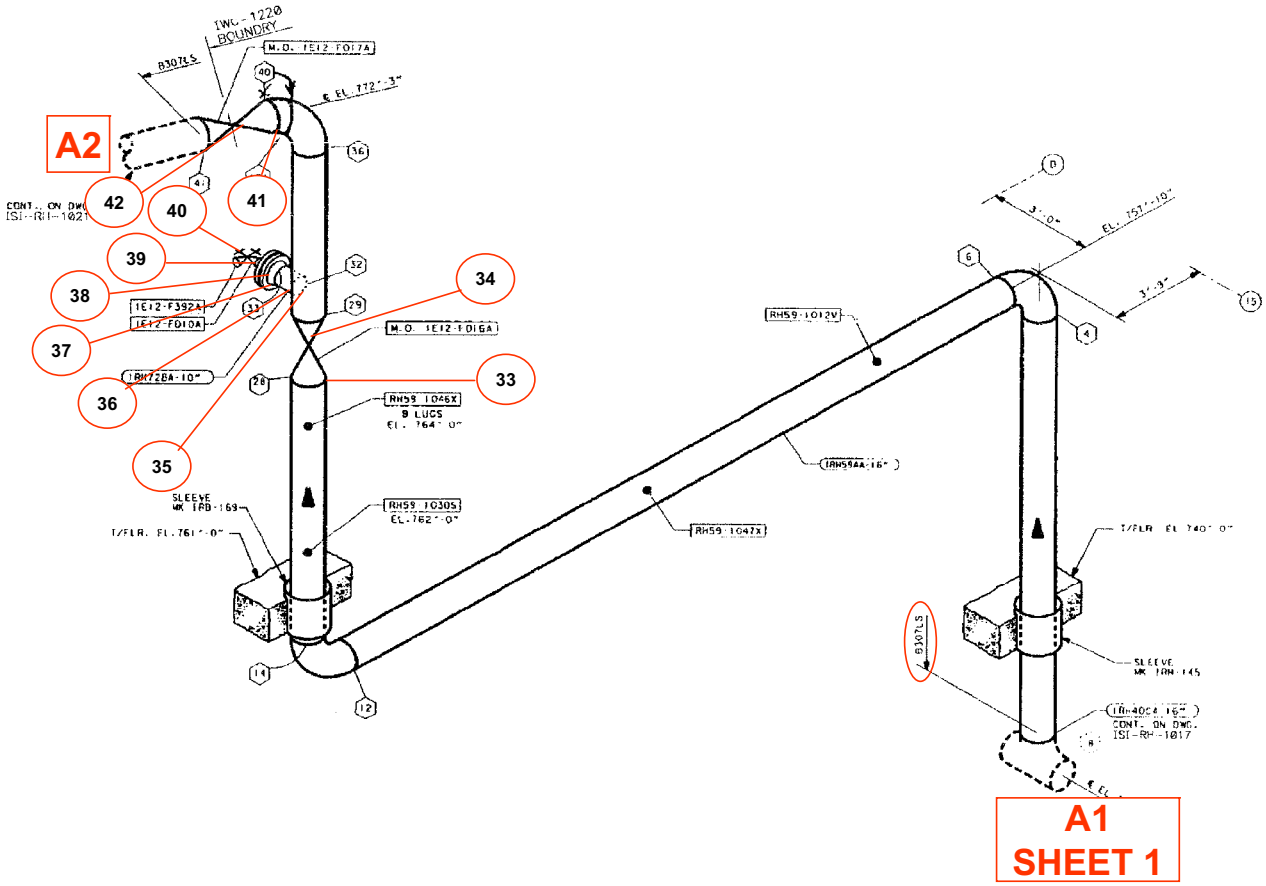

# GROUP 16 – RESIDUAL HEAT REMOVAL SPRAY PIPING (Sheet 6 of 8)
## (Covers Worksheets ESF-RHRSPRAY – 1 thru 73)

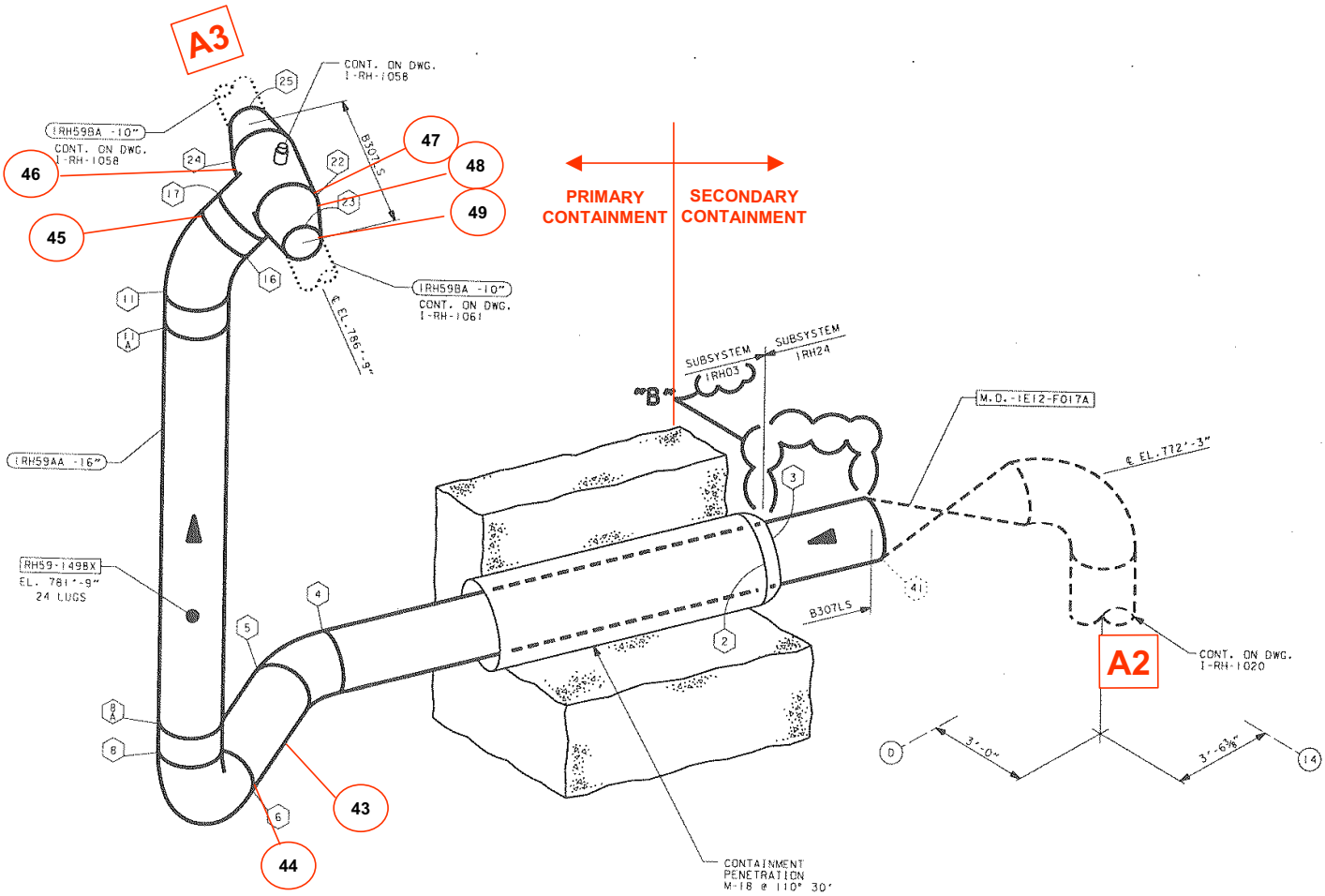

# GROUP 16 – RESIDUAL HEAT REMOVAL SPRAY PIPING (Sheet 7 of 8) (Covers Worksheets ESF-RHRSPRAY – 1 thru 73)

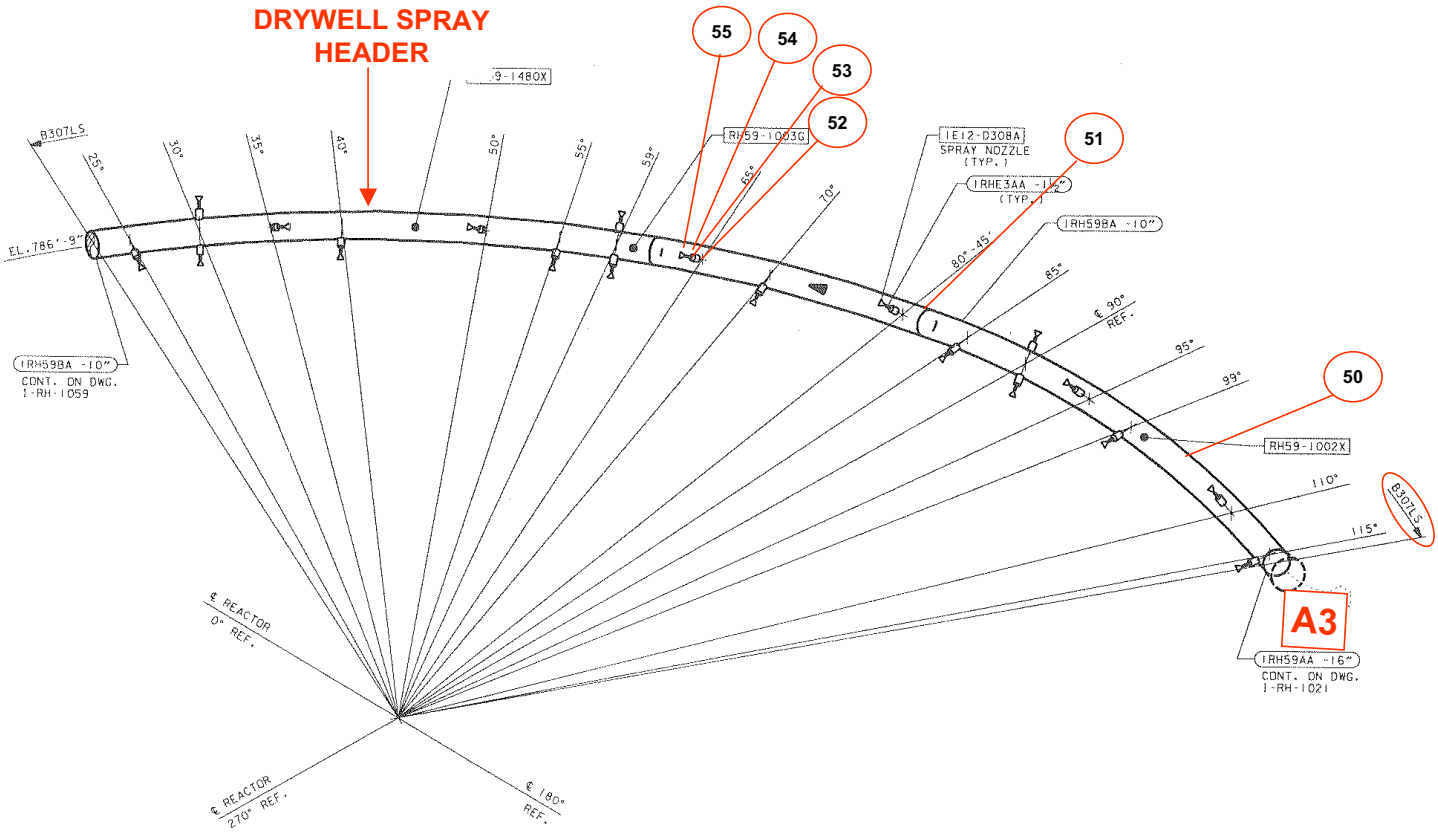

# GROUP 16 – RESIDUAL HEAT REMOVAL SPRAY PIPING (Sheet 8 of 8)
## (Covers Worksheets ESF-RHRSPRAY – 1 thru 73)

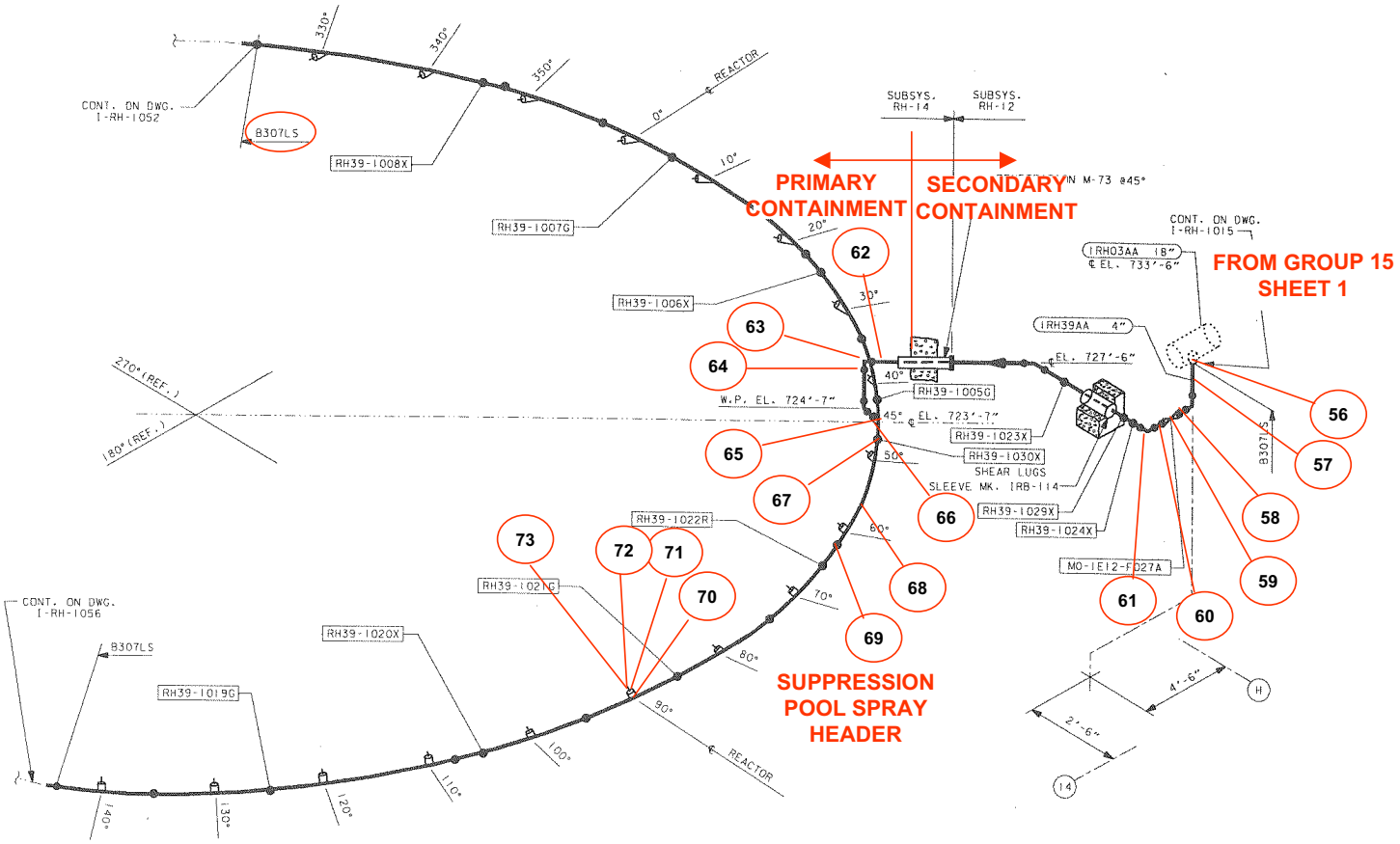

# GROUP 17 – MAIN STEAM (Sheet 1 of 9)
# (Covers Worksheets PCS-MS – 1 thru 75)

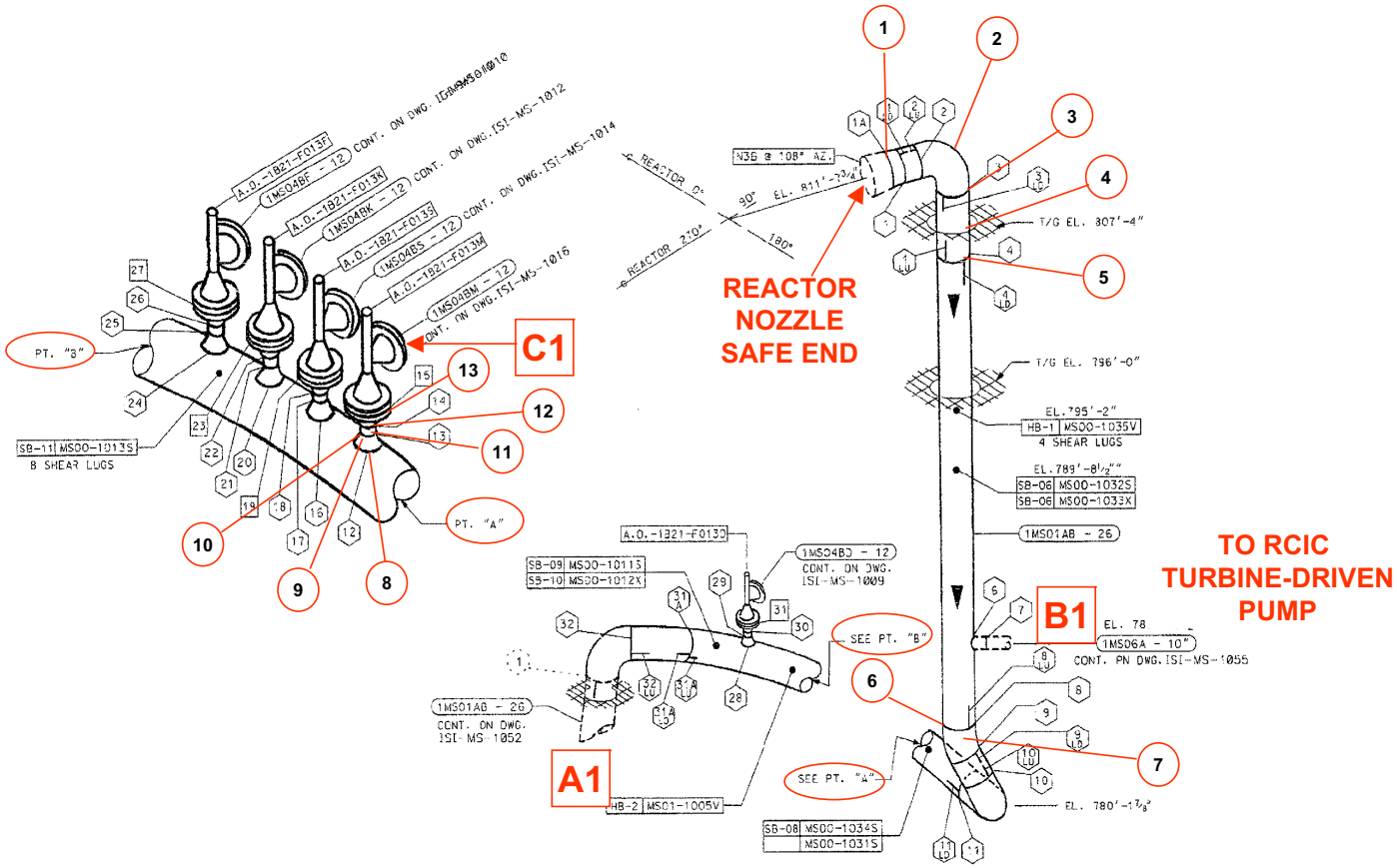

# GROUP 17 – MAIN STEAM (Sheet 2 of 9)
# (Covers Worksheets PCS-MS – 1 thru 75)

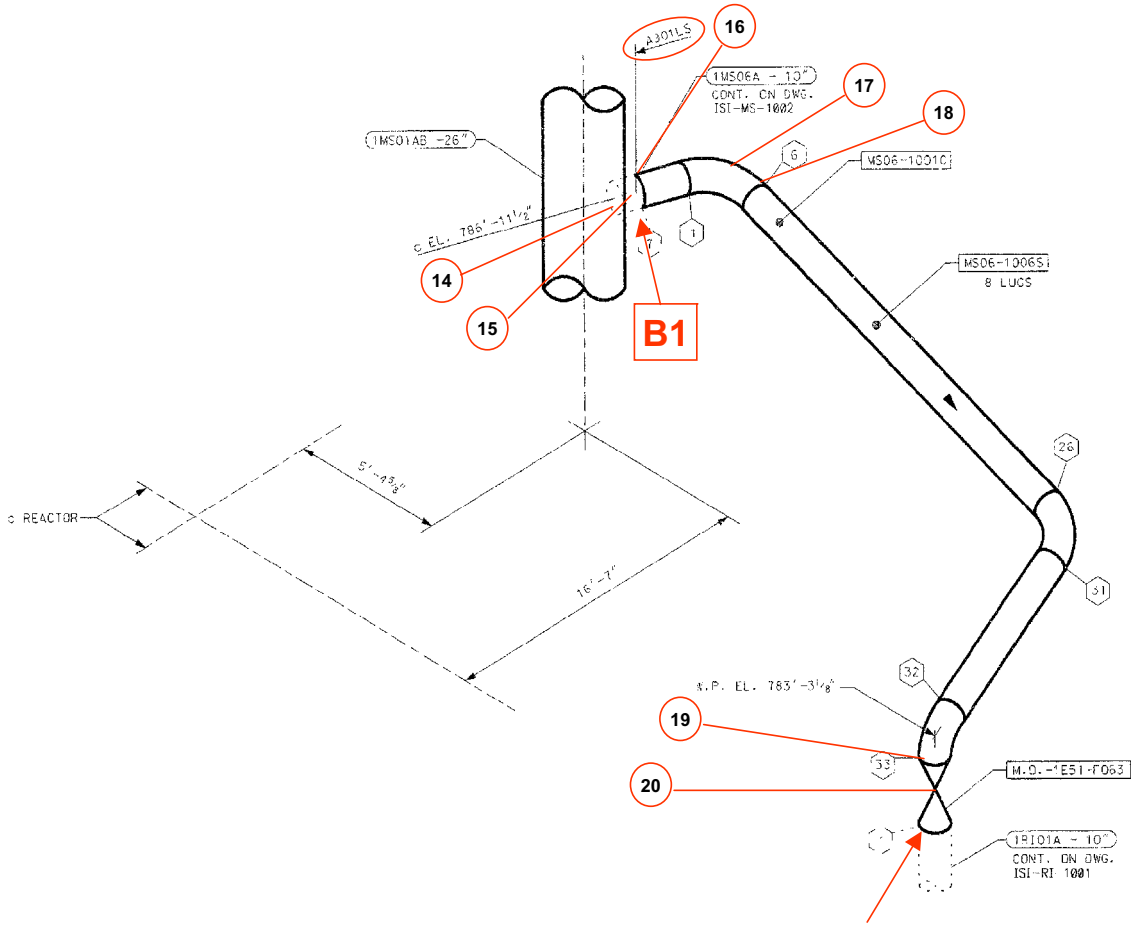


**To RCIC TURBINE-DRIVEN PUMP**
**ESI-C002**

# GROUP 17 – MAIN STEAM (Sheet 3 of 9)
# (Covers Worksheets PCS-MS – 1 thru 75)

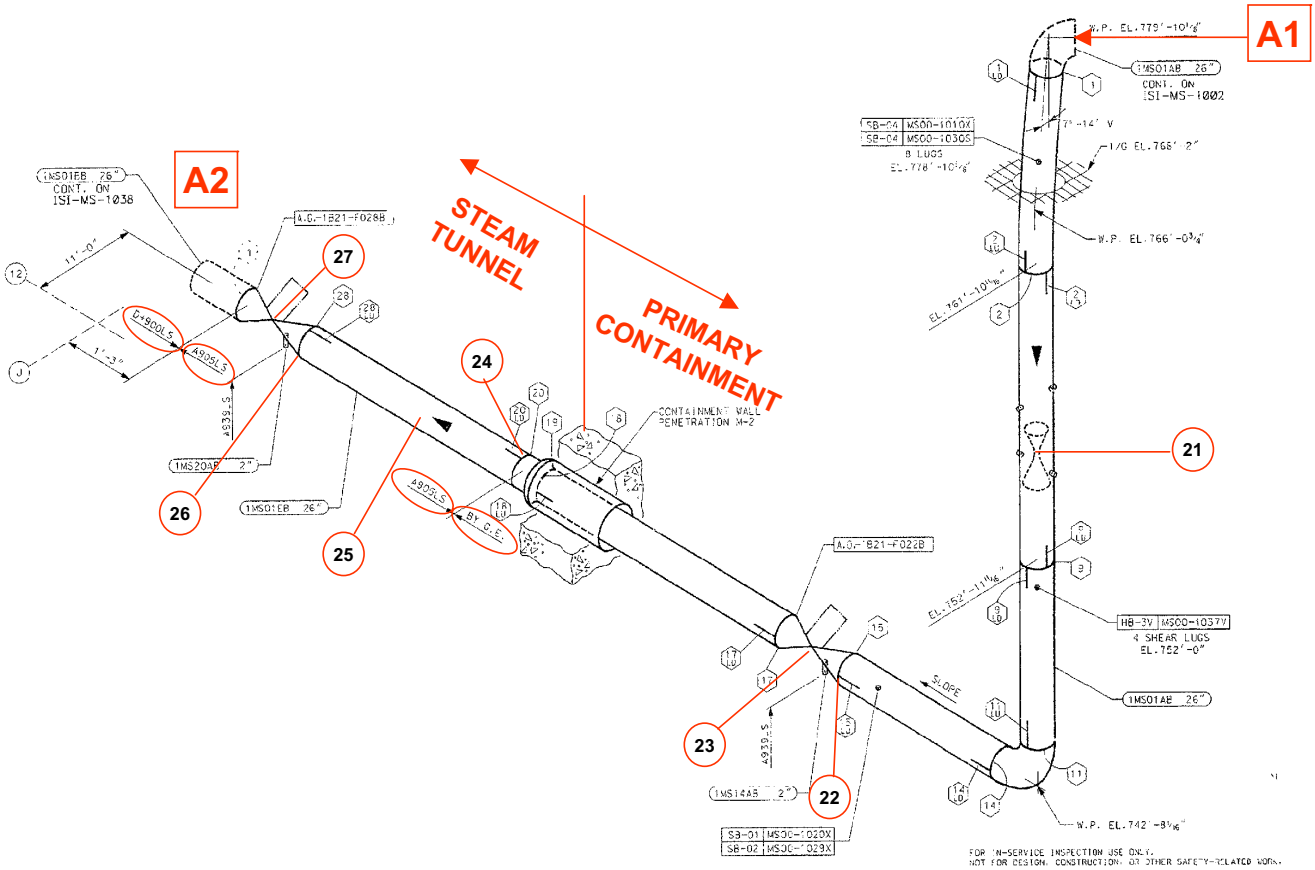


FOR IN-SERVICE INSPECTION USE ONLY.
NOT FOR DESIGN, CONSTRUCTION, OR OTHER SAFETY-RELATED WORK.

# GROUP 17 – MAIN STEAM (Sheet 4 of 9)
# (Covers Worksheets PCS-MS – 1 thru 75)

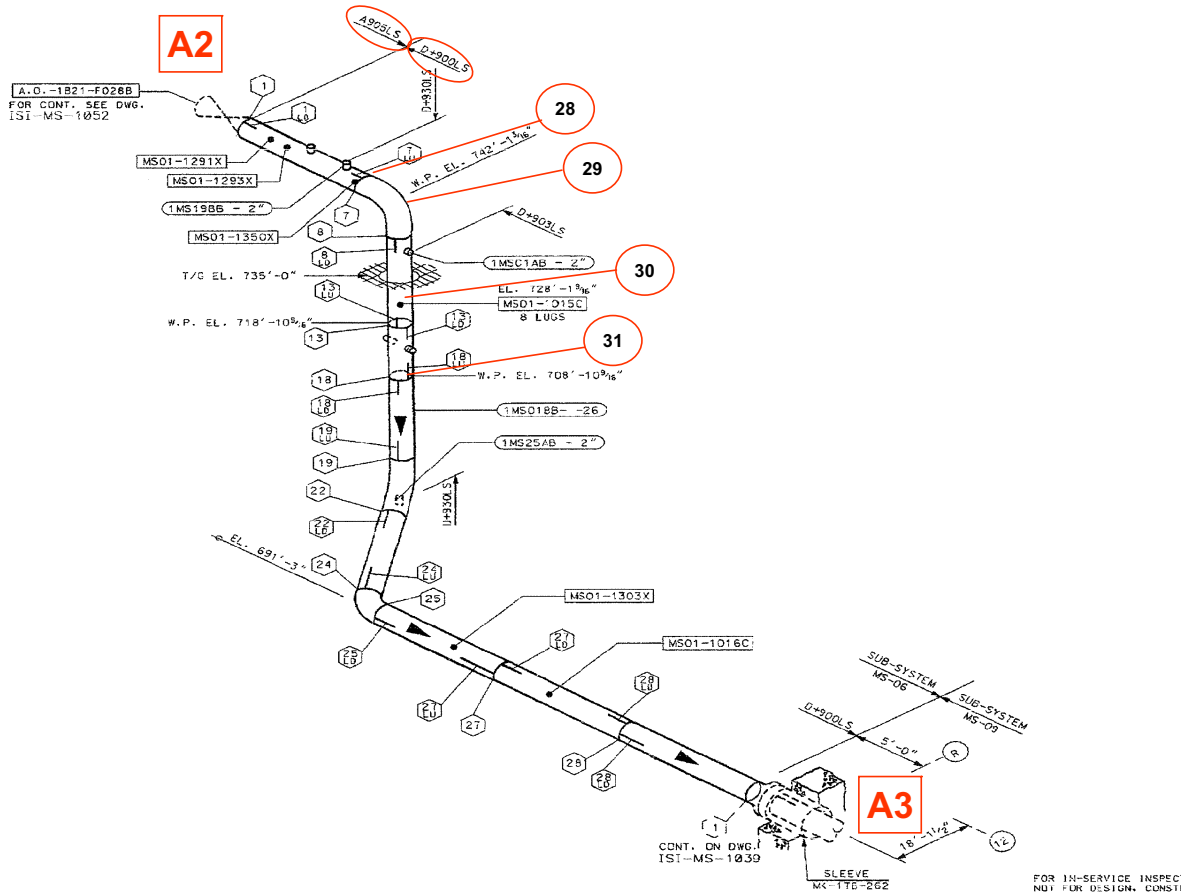

# GROUP 17 – MAIN STEAM (Sheet 5 of 9)
# (Covers Worksheets PCS-MS – 1 thru 75)

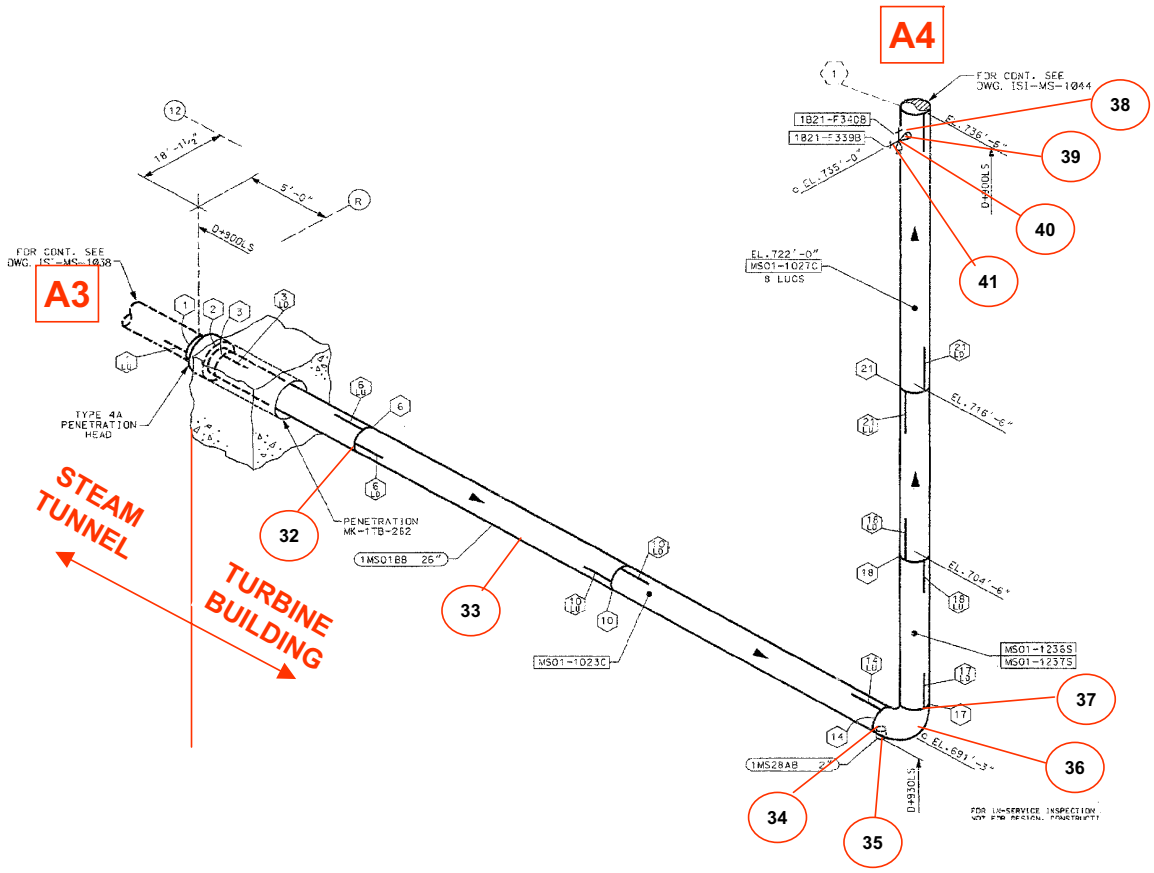

# GROUP 17 – MAIN STEAM (Sheet 6 of 9)
# (Covers Worksheets PCS-MS – 1 thru 75)

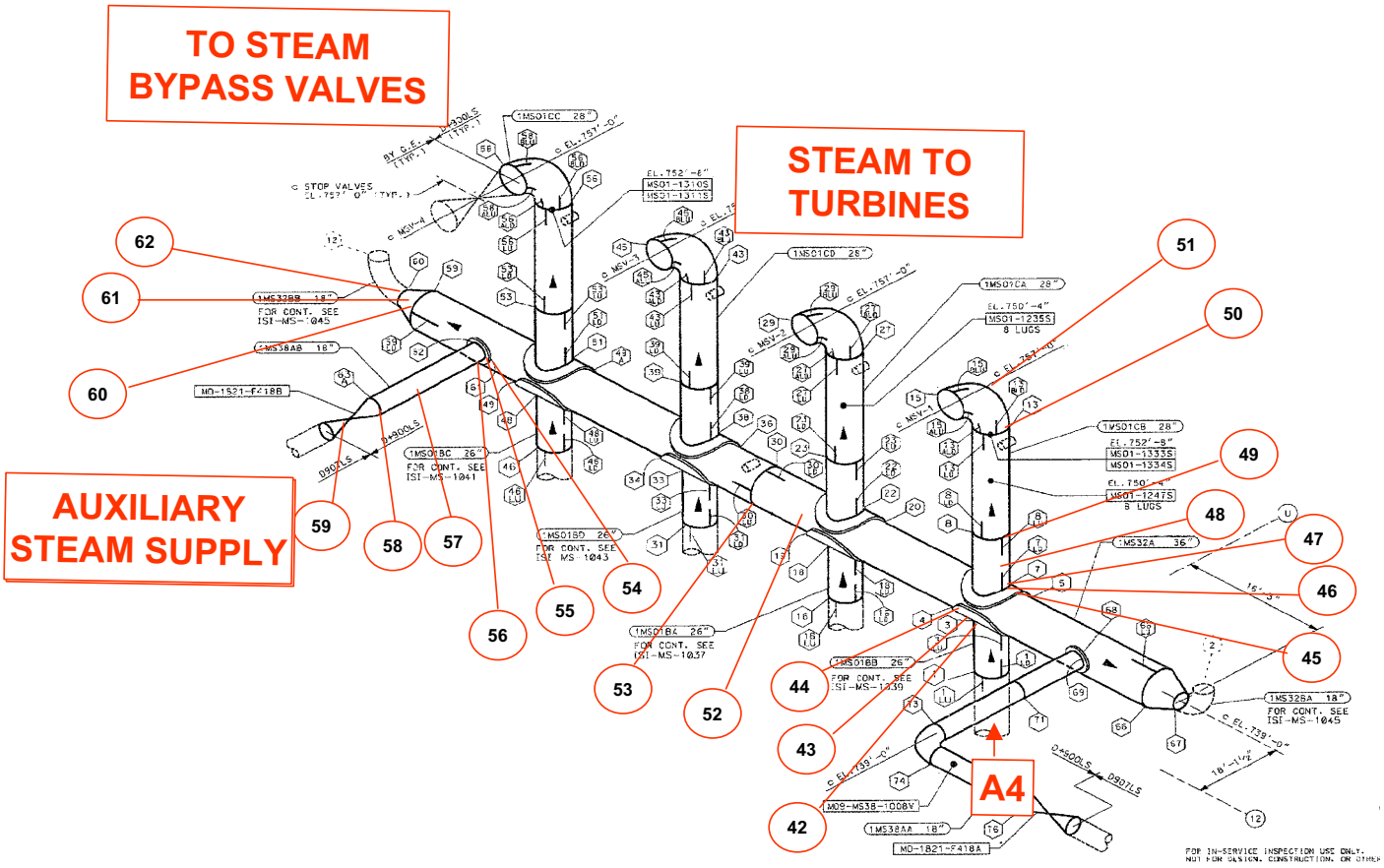

# GROUP 17 – MAIN STEAM (Sheet 7 of 9)
# (Covers Worksheets PCS-MS – 1 thru 75)

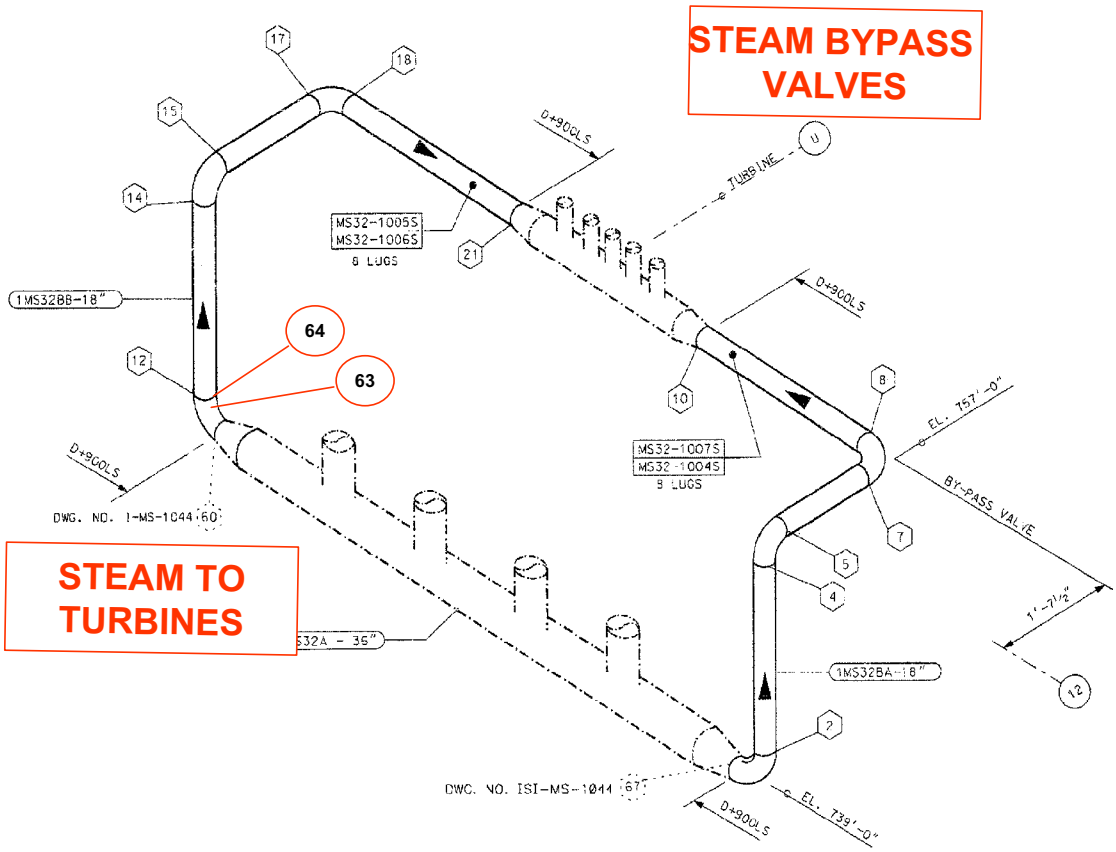

# GROUP 17 – MAIN STEAM (Sheet 8 of 9)
# (Covers Worksheets PCS-MS – 1 thru 75)

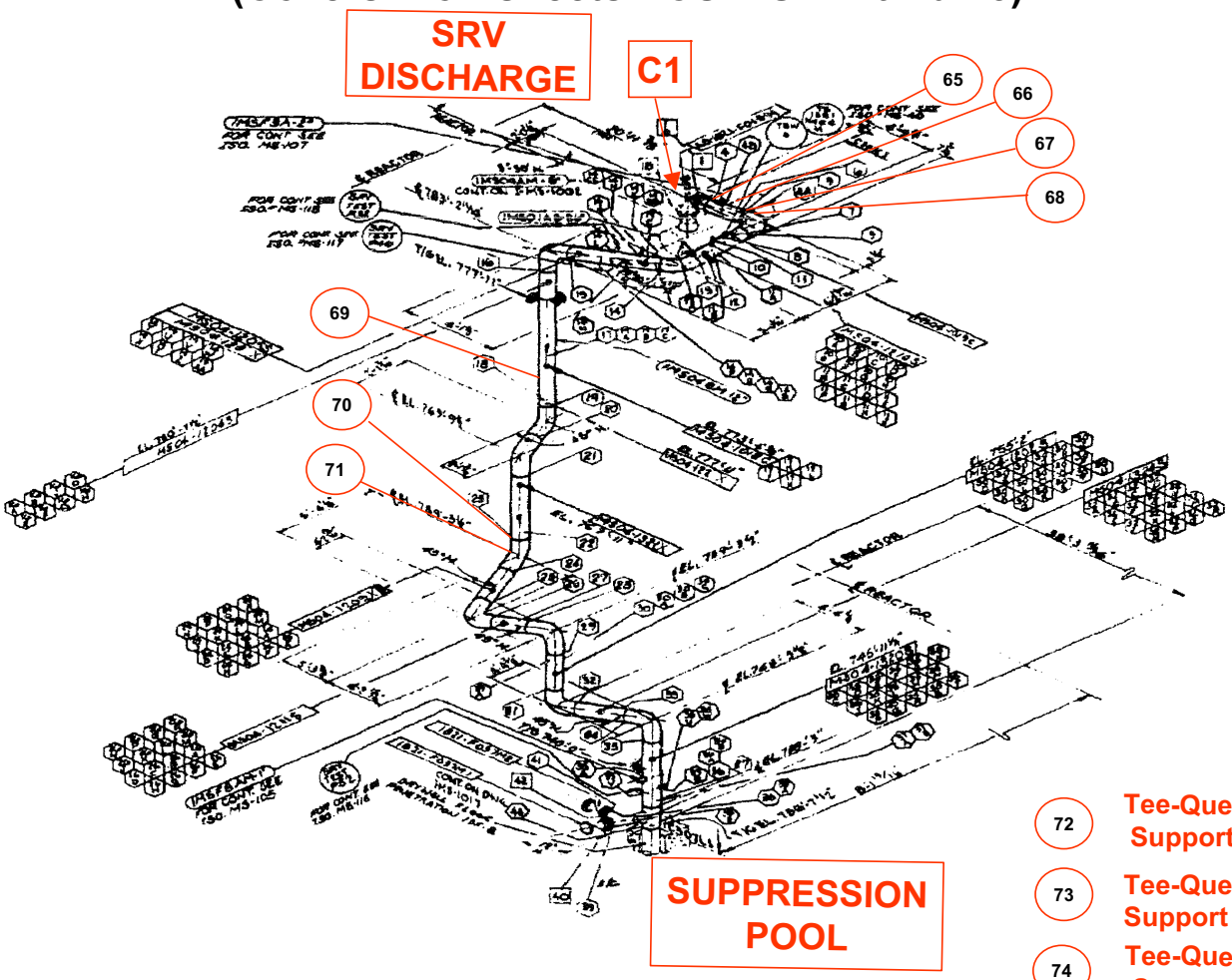


72 Tee-Quencher Support Plate

73 Tee-Quencher Support Plate Bolts

74 Tee-Quencher Sparger

# GROUP 17 – MAIN STEAM (Sheet 9 of 9)
# (Covers Worksheets PCS-MS – 1 thru 75)

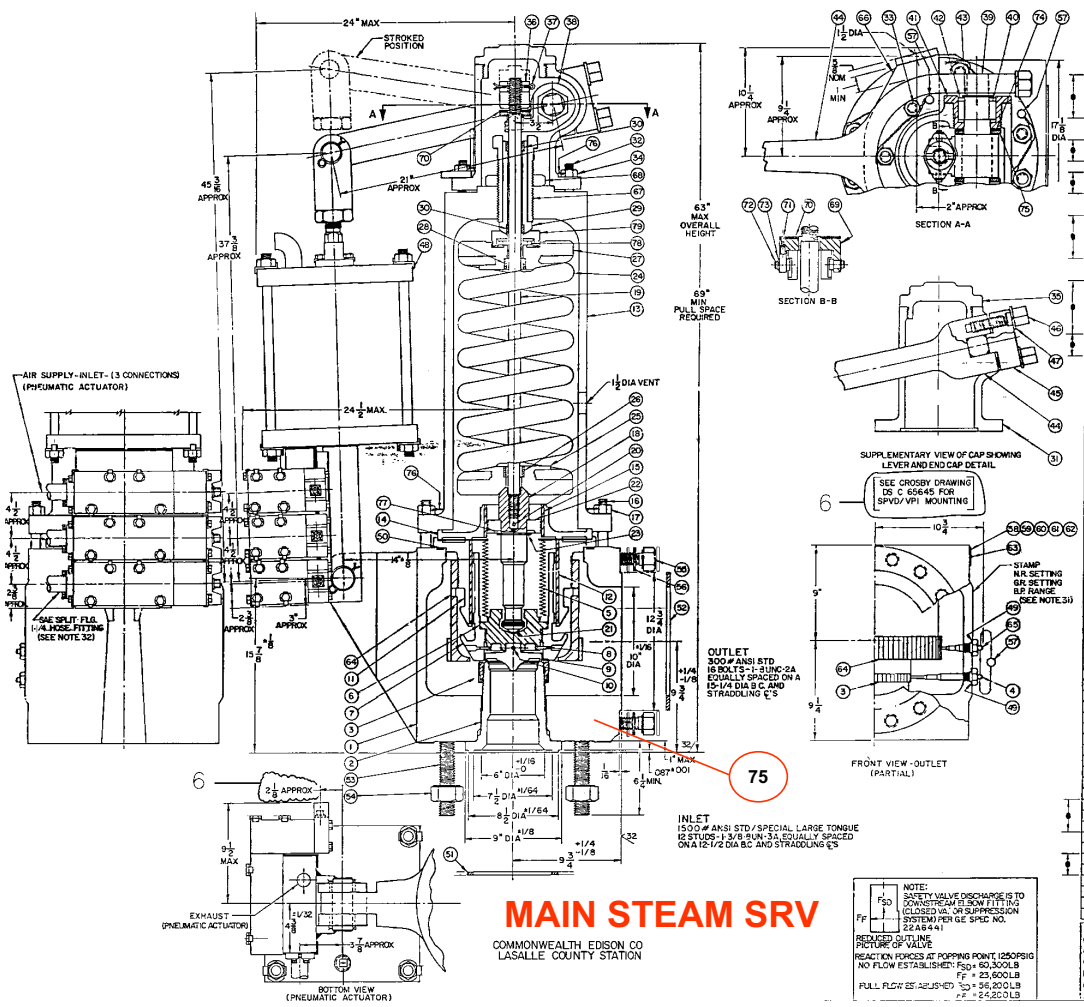


## MAIN STEAM SRV

COMMONWEALTH EDISON CO
LASALLE COUNTY STATION

NOTE: SAFETY VALVE DISCHARGE IS TO DOWNSTREAM STEAM FITTING (CLOSED VALVE SUPPRESSION SYSTEM) PER GE SPEC NO. 22A6441

REDUCED OUTLINE PICTURE OF VALVE

REACTION FORCES AT POPPING POINT, 1250PSIG NO FLOW ESTABLISHED: $F_{SO}$ = 60,300LB, $F_P$ = 23,600LB

FULL FLOW ESTABLISHED: $F_{SO}$ = 36,200LB, $F_P$ = 24,200LB

LIST OF MATERIALS

| PC.NO. | DESCRIPTION | NO REQ'D | MAT'L. SPEC. | SEE NOTES ON SHT. 2 | REMARKS |
|---|---|---|---|---|---|
| 1 | BODY | 1 | ASTM A105 GR. II | 4,5,6,7 | |
| 2 | NOZZLE | 1 | ASME SA182 GR.F316 | 2,3,5,16,18 | |
| 3 | " RING | 1 | ACI-CF8M (316) | | SOLUTION ANNEALED |
| 4 | " SET SCREW | 1 | ASTM A582 TYPE 416 COND T | 2,33 | |
| 5 | BELLOWS | 1 | INCONEL 718 | 2,14 | |
| 6 | DISC HOLDER | 1 | AMS 5662B(INCONEL 718) | 2,4,5,6,8 | |
| 7 | " RING | 1 | ACI-CB7CU-(17-4PH) | 2,9 | |
| 8 | " " PIN | 2 | SST 304 | 2 | |
| 9 | DISC INSERT | 1 | ASME SA 637 GR. 718 | 2,3,5,16,18, | |
| 10 | " " PIN | 1 | HAYNES ALLOY #25 | 2 | |
| 11 | EDUCTOR | 1 | ACI-CB7CU (17-4PH) | 9 | |
| 12 | " SLEEVE | 1 | STELLITE 6 | | |
| 13 | BONNET | 1 | ASTM A105 GR II | 4,5,6,7 | |
| 14 | " ADAPTER | 1 | ASTM A216 GR WCB | | |
| 15 | " " SLEEVE | 1 | STELLITE 6 | | |
| 16 | " STUD | 12 | ASTM A193 GR B7 | 4,5,7 | 1"BUNC-3A 6-1/4 LONG |
| 17 | " " NUT | 12 | ASME SA194 CL. 2H | 4,5,7,2 | 1"BUNC-2B HVY. HEX |
| 18 | SPINDLE POINT | 1 | ASTM A564 TYPE 630 | 4,5,6,8,9,34 | |
| 19 | " ROD | 1 | ASTM A564 TYPE 630 | 9,34 | |
| 20 | " " PIN | 1 | SST 316 | 34 | SOLUTION ANNEALED |
| 21 | " BALL | 1 | STELLITE 6 | 4,5,8,34 | |
| 22 | PISTON | 1 | ASTM A582 TYPE 416 COND T | | |
| 23 | " RETAINING RING | 1 | TRU-ARC 5100-250-H | 2 | |
| 24 | SPRING | 1 | ASTM A304 GR' 4161 H | 4,5,6,8,10,2 | |
| 25 | " WASHER(BOTT) | 1 | ASTM A105 GR. II | 4,5,6,8,2,17,18 | |
| 26 | " " SLEEVE | 1 | ASTM B438 GR I | | BRONZE |
| 27 | " WASHER(TOP) | 1 | ASTM A105 GR. II | 4,5,6,8,2,17,18 | |
| 28 | " " SLEEVE | 1 | ASTM B438 GR.I | | BRONZE |
| 29 | ADJ BOLT BUTTON | 1 | ASME A193 GR B6 (410) | 4,5,6,8,18 | |
| 30 | " " " SLEEVE | 2 | ASTM B438 GR I | | BRONZE |
| 31 | CAP | 1 | ASTM A216 GR WCB | | |
| 32 | " STUD (SHORT) | 3 | ASTM A193 GR B7 | | 3/4-10UNC 2A 3-1/4 LONG |
| 33 | " " (LONG) | 3 | " " " | | 3/4-10UNC 2A 4-1/2 LONG |
| 34 | " " NUT | 6 | ASME SA194 CL. 2H | 2 | 3/4-10UNC 2B HVY. HEX. |
| 35 | " TOP | 1 | ASTM A216 GR WCB | | |
| 36 | SPINDLE NUT | 1 | ASTM A276 TYPE 440C | 2 | |
| 37 | " " COTTER | 1 | STEEL COMMERCIAL | 2 | 1/8 DIA. X 3" LONG |
| 38 | DOG | 1 | ASTM A148 GR 120-95 | 19H | |
| 39 | " SHAFT | 1 | ASTM A582 TYPE 416 COND A | | PURCHASED TO COND A |
| 40 | " " BEARING | 2 | TIMKEN NO-HB6025 | 21 | WITH IR 384828 |
| 41 | " " RETAINER | 2 | ASTM A216 GR WCB | | |
| 42 | " " END COVER | 2 | STEEL COMMERCIAL | | |
| 43 | " " CVR. RET RING | 2 | TRUARC NO. 5100-237 | 2 | |
| 44 | LEVER | 1 | ASTM A148 GR.120-95 | | |
| 45 | " END CAP | 2 | CARBON STEEL AISI-C1018 | | |
| 46 | " CAP SCREW | 4 | STEEL COMMERCIAL | | 1-1/4-12UNF-2A-3-3/4 LG |
| 47 | LOCKWASHER | 4 | " " | 2 | |
| 48 | AUXILIARY PNEUMATIC ACTUATOR ASS'Y | | | 2 | |
| | AIR CYLINDER | 1 | | | SEE SHEET 3 |
| | SOLENOID VALVE | 3 | | | SEE SHEET 4 |
| 49 | GASKET-SET SCREW | 2 | STEEL AISI 1010-1030 | 2 | |
| 50 | " -EDUCTOR | 1 | FLEXITALLIC R SPECIAL | 2,22,35 | |
| 51 | " -INLET | 1 | FLEXITALLIC RS-15P | 2,23,35 | |
| 52 | " -OUTLET | 1 | FLEXITALLIC CG-3R | 2,24,35 | |
| 53 | INLET-STUD | 12 | ASTM A193 GR.B7 | 4,5,7,34 | 1-3/8-8UN-3A 9" LONG |
| 54 | " " NUT | 12 | ASTM A194 CL.2H | 4,5,7,35 | 1-3/8-8UN-2B HVY HEX. |
| 55 | OUTLET BOLT | 16 | ASTM A193 GR.B7 | | 4" LONG HVY SEMI-FIN HEX |
| 56 | " " WASHER | 32 | COMMERCIAL CARBON STEEL | 2 | SELF ALIGNING 2½" SIZE |
| 57 | SEAL & WIRE | 3 | LEAD-STEEL | | |
| 58 | NAME PLATE | 1 | SST 304 | | SEE SHEET 2 |
| 59 | IDENTIFICATION PLATE | 1 | " " | | SEE SHEET 2 |
| 60 | INFORMATION PLATE | 1 | " " | | SEE SHEET 2 |
| 61 | NAME PLATE | 1 | " " | | SEE SHEET 2 |
| 62 | RESPONSE TIME PLATE | 1 | " " | | SEE SHEET 2 |
| 63 | DRIVE SCREW | 1 | SST 302 | | |
| 64 | ADJUSTING RING | 1 | ACI-CF8M | | SOLUTION ANNEALED |
| 65 | " " SET SCREW | 1 | ASTM A582 TYPE 416 COND T | 2,33 | |
| 66 | LIFTING BRACKET | 1 | STEEL COMMERCIAL | | |
| 67 | ADJUSTING BOLT | 1 | ASME A193 GR B6 (410) | 4,5,6,8,18 | |
| 68 | " " NUT | 1 | CARBON STEEL AISI-C1018 | | |
| 69 | LOAD PLATE | 1 | ICI 0597T TYPE 440C | 2 | |
| 70 | DU BEARING | 1 | COMMERCIAL | 2,26 | |
| 71 | RIVET | 2 | ASME SA479 (304) | 2 | |
| 72 | PIN | 2 | ASTM A582 (416) | 2 | |
| 73 | RETAINING RING | 2 | ASTM A276 TYPE 410 | 2 | |
| 74 | DU SPACER | 2 | COMMERCIAL | 2,26 | |
| 75 | BACKING PLATE | 2 | STEEL AISI-1215 | 2 | |
| 76 | LOCKING WIRE | A/R | SS QQ-W423 COND.A | 2,25 | NUTS LOCKED IN PAIRS |
| 77 | PRECISION WASHER | 1 | TRUARC 5900-253 | 2 | |
| 78 | THRUST BEARING | 1 | ROLLWAY T-613 (EQUIV) | 2,15 | |
| 79 | " " ADAPTER | 1 | ASTM A193 GR B6 | 4,5,6,8,18 | |

| | | | |
|---|---|---|---|
| CROSBY CUST. EXELON | SCALE: 1:4 DO NOT SCALE DRAWING | ASME SECTION III CLASS I | |
| ORDER NO. 00024479 | | CROSBY VALVE & GAGE CO. WRENTHAM MASS 02093 | |
| OPSBY PO. NV10003389 | | | |
| PREPARED BY RNB (9 APR 01) | WEIGHT 2800LBS MAX (DRY) | DRAWING TITLE | SAFETY RELIEF VALVE FOR MAIN STEAM SERVICE |
| CHECKED BY [illegible] | SIZE 6 R 10 STILE HB-65-BP | DRAWING NO | DS-A-63790-5 |
| | TYPE DF ASSY NO. N63790-5 | | REV A |

# GROUP 18 – CYCLED CONDENSATE STORAGE TANK (Sheet 1 of 11)
## (Covers Worksheets ESF-CCST – 1 thru 58)

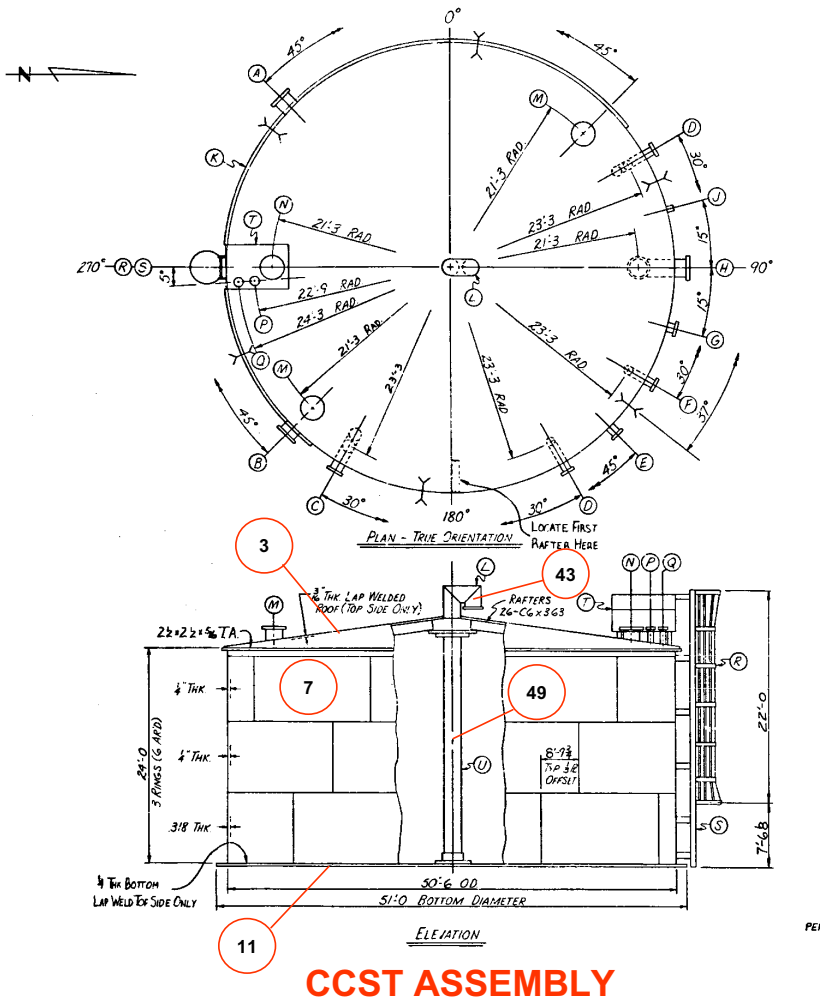


**CCST ASSEMBLY**

# GROUP 18 – CYCLED CONDENSATE STORAGE TANK (Sheet 2 of 11)
## (Covers Worksheets ESF-CCST – 1 thru 58)

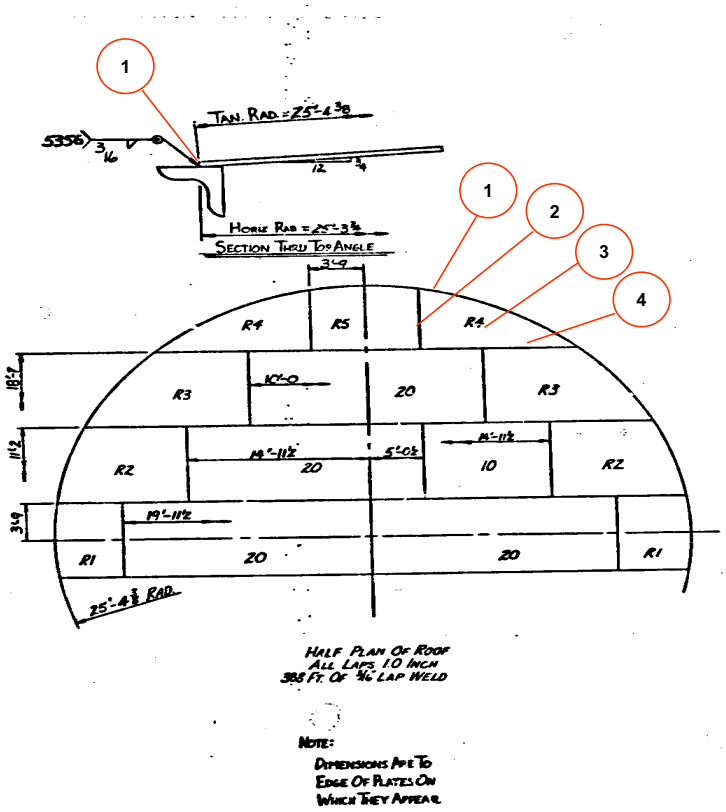


**CCST ROOF WELDMENT**
**(PLAN VIEW)**

# GROUP 18 – CYCLED CONDENSATE STORAGE TANK (Sheet 3 of 11)
## (Covers Worksheets ESF-CCST – 1 thru 58)

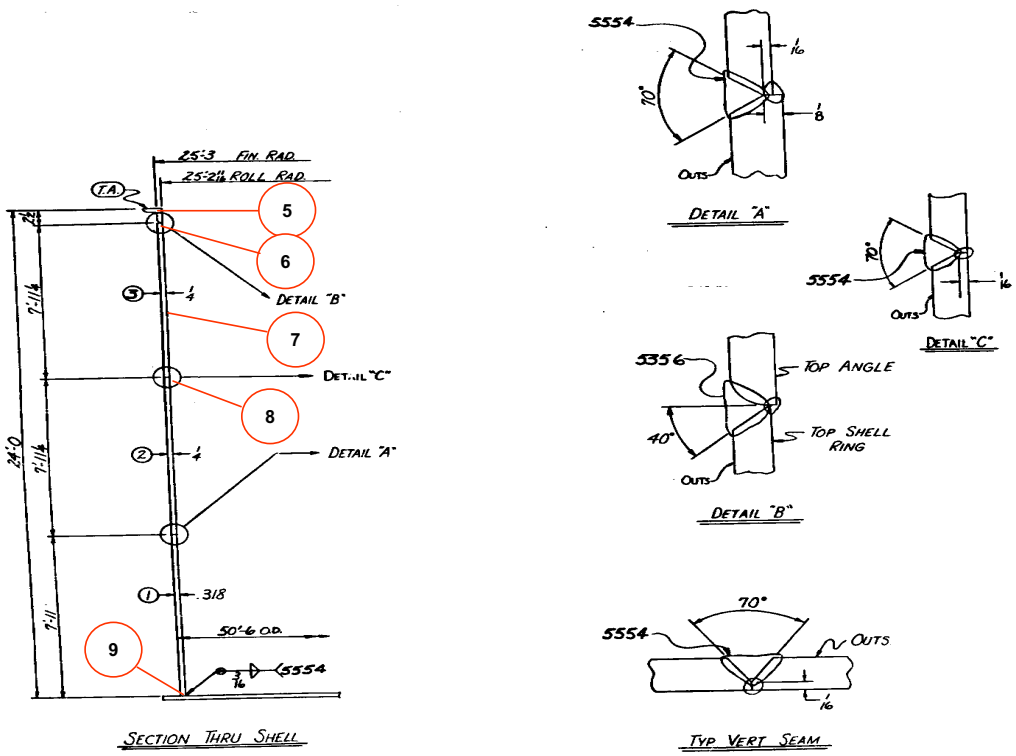


**CCST ELEVATION VIEW**

# GROUP 18 – CYCLED CONDENSATE STORAGE TANK (Sheet 4 of 11)
## (Covers Worksheets ESF-CCST – 1 thru 58)

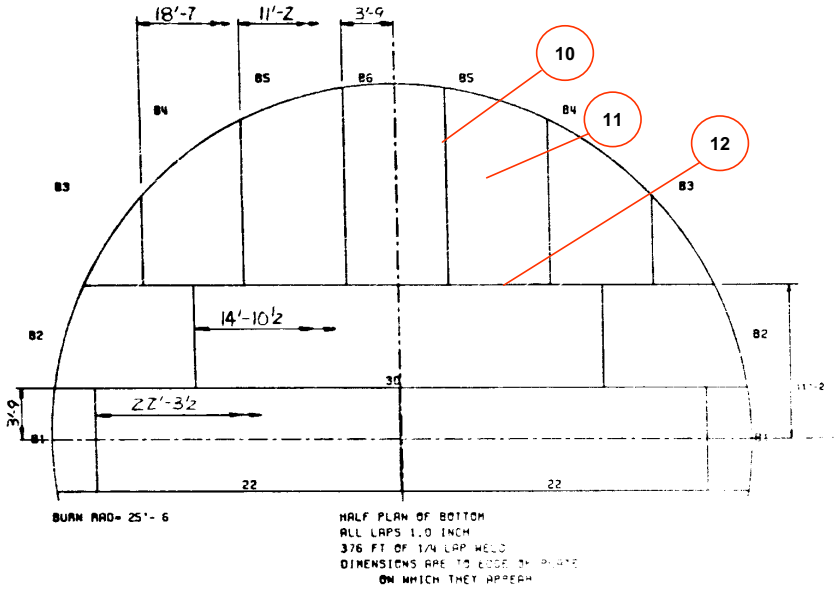


**CCST BOTTOM WELDMENT**
**(PLAN VIEW)**

# GROUP 18 – CYCLED CONDENSATE STORAGE TANK (Sheet 5 of 11)
## (Covers Worksheets ESF-CCST – 1 thru 58)

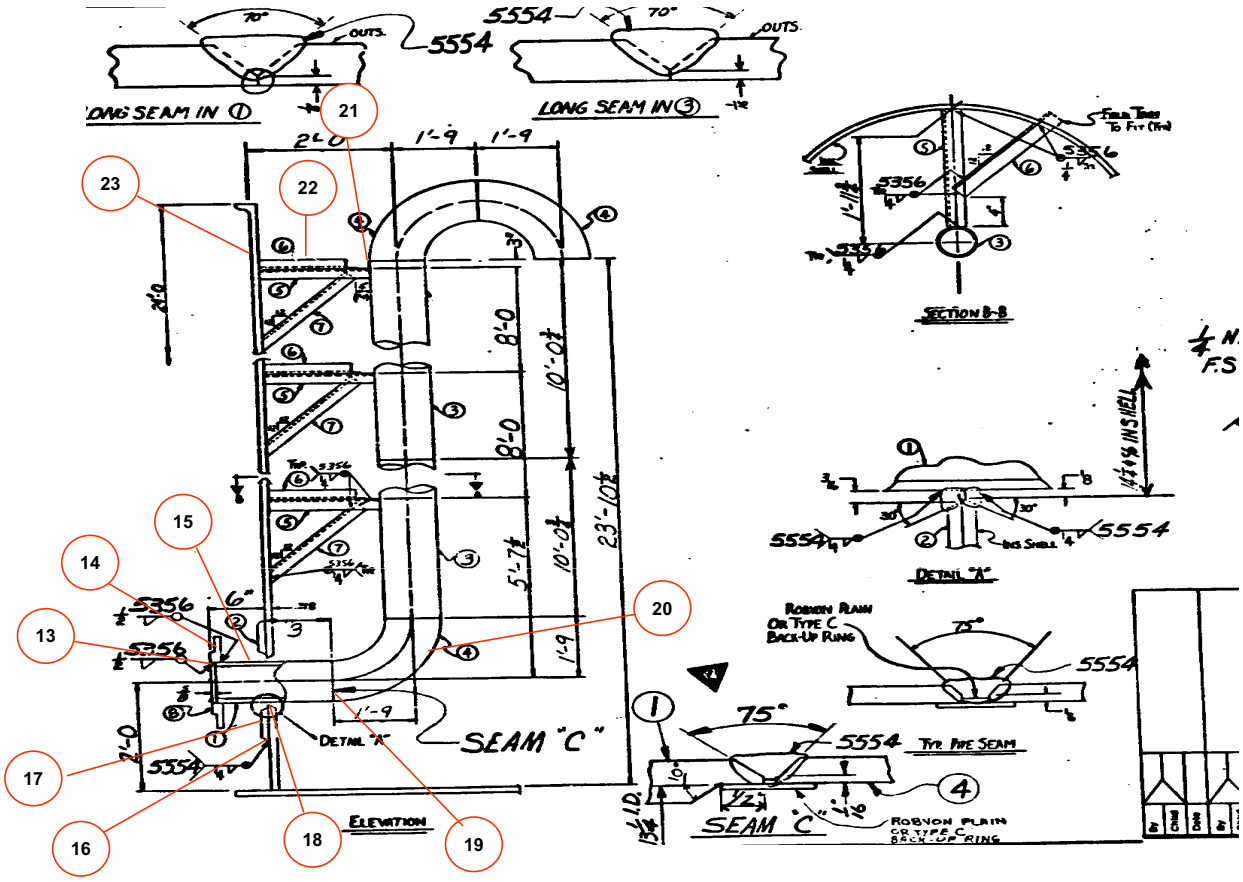


**14"SHELL NOZZLE (C)**

# GROUP 18 – CYCLED CONDENSATE STORAGE TANK (Sheet 6 of 11)
# (Covers Worksheets ESF-CCST – 1 thru 58)



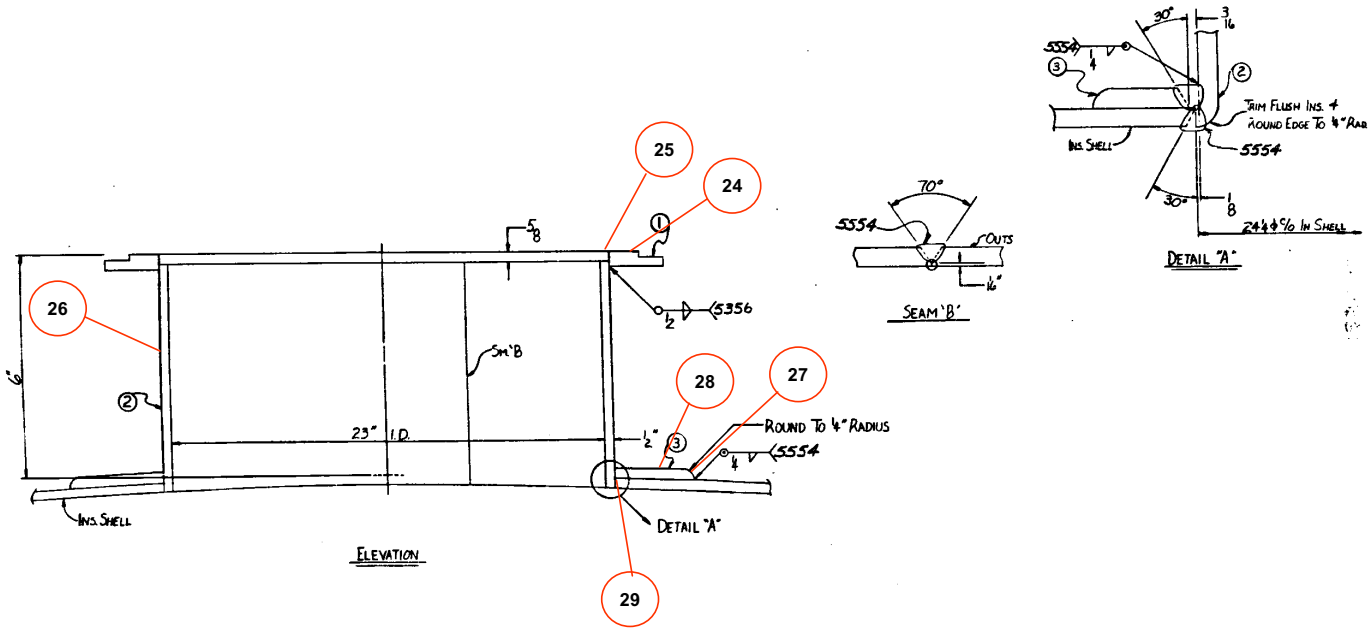


**24" SHELL NOZZLE (B)**

# GROUP 18 – CYCLED CONDENSATE STORAGE TANK (Sheet 7 of 11)
## (Covers Worksheets ESF-CCST – 1 thru 58)

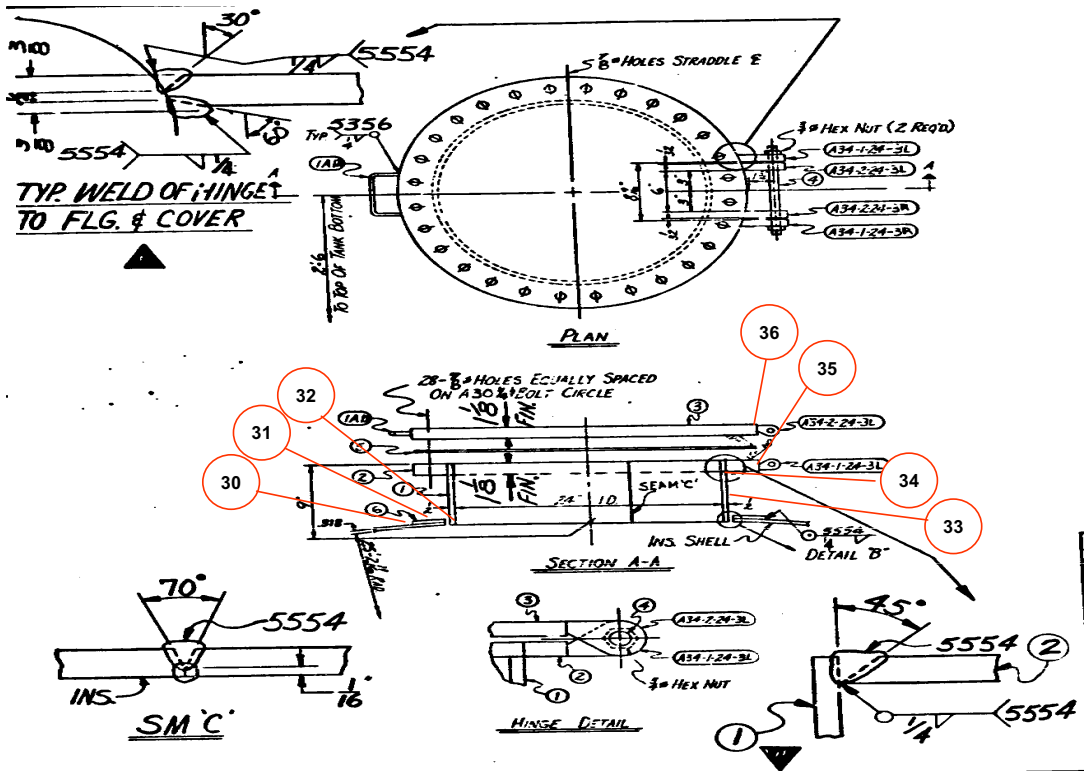


**24" SHELL MANHOLE (A)**

# GROUP 18 – CYCLED CONDENSATE STORAGE TANK (Sheet 8 of 11)
## (Covers Worksheets ESF-CCST – 1 thru 58)

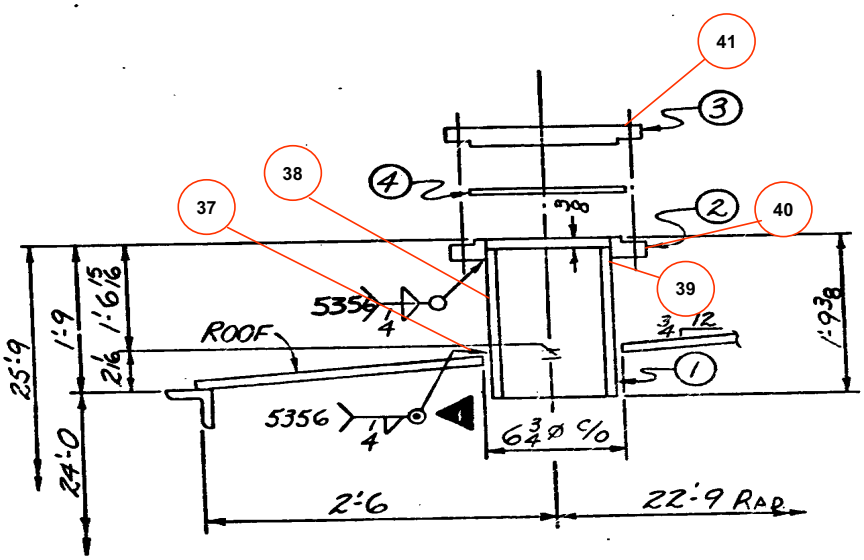


SECT. THRU NOZZLE

**6" ROOF NOZZLE (P)**

# GROUP 18 – CYCLED CONDENSATE STORAGE TANK (Sheet 9 of 11)
## (Covers Worksheets ESF-CCST – 1 thru 58)

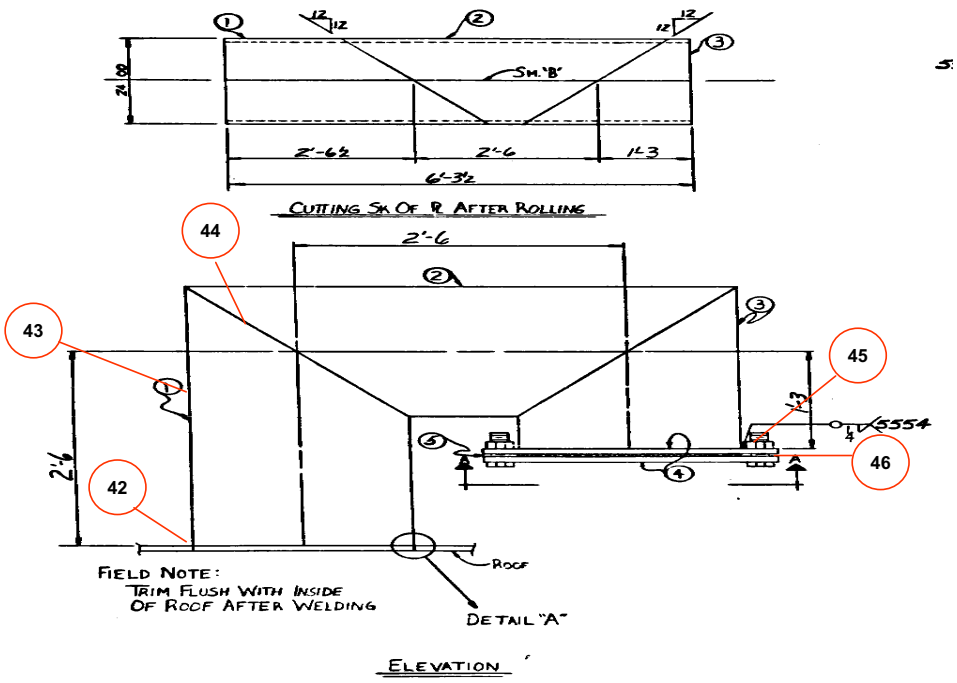


**24" SCREENED VENT (L)**

# GROUP 18 – CYCLED CONDENSATE STORAGE TANK (Sheet 10 of 11)
## (Covers Worksheets ESF-CCST – 1 thru 58)

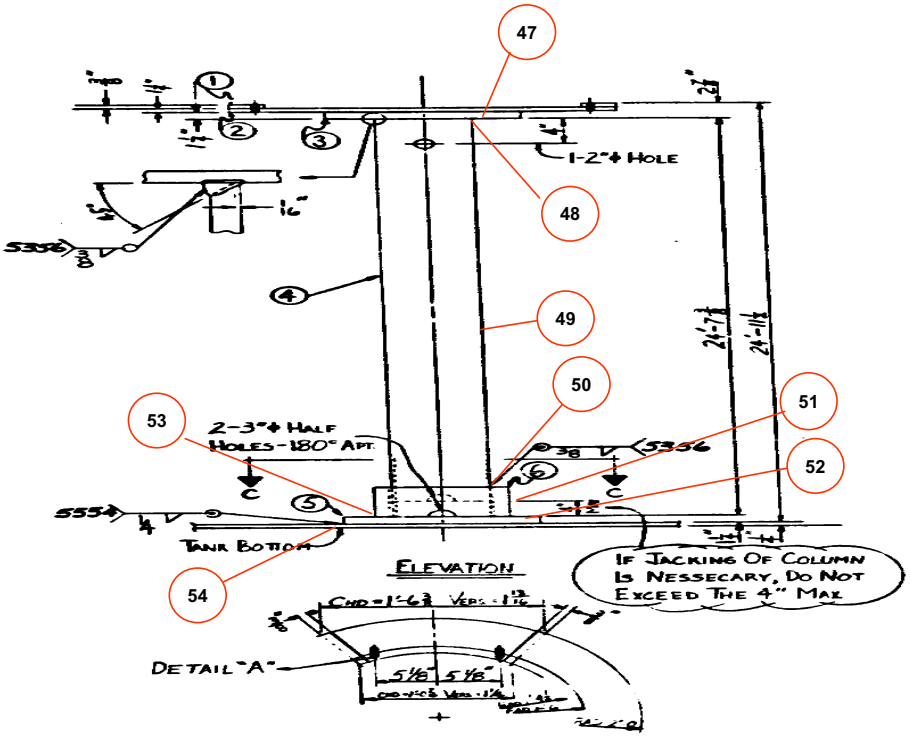


**10" COLUMN SUPPORT (U)**

# GROUP 18 – CYCLED CONDENSATE STORAGE TANK (Sheet 11 of 11)
## (Covers Worksheets ESF-CCST – 1 thru 58)

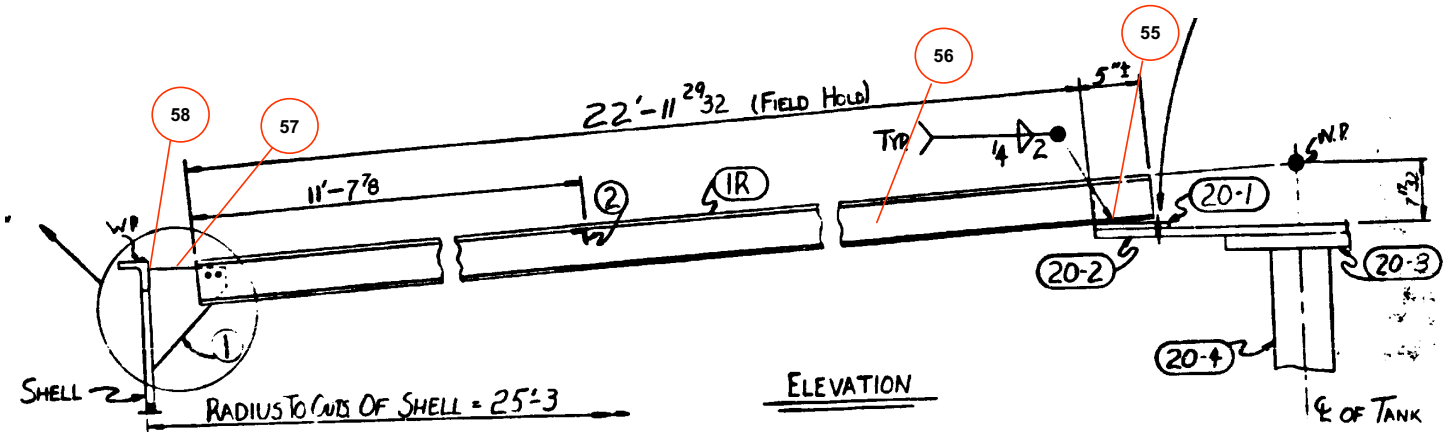


**INTERNAL ROOF FRAMING**

# GROUP 19 – FEEDWATER (Sheet 1 of 6)
# (Covers Worksheets PCS-FW – 1 thru 107)

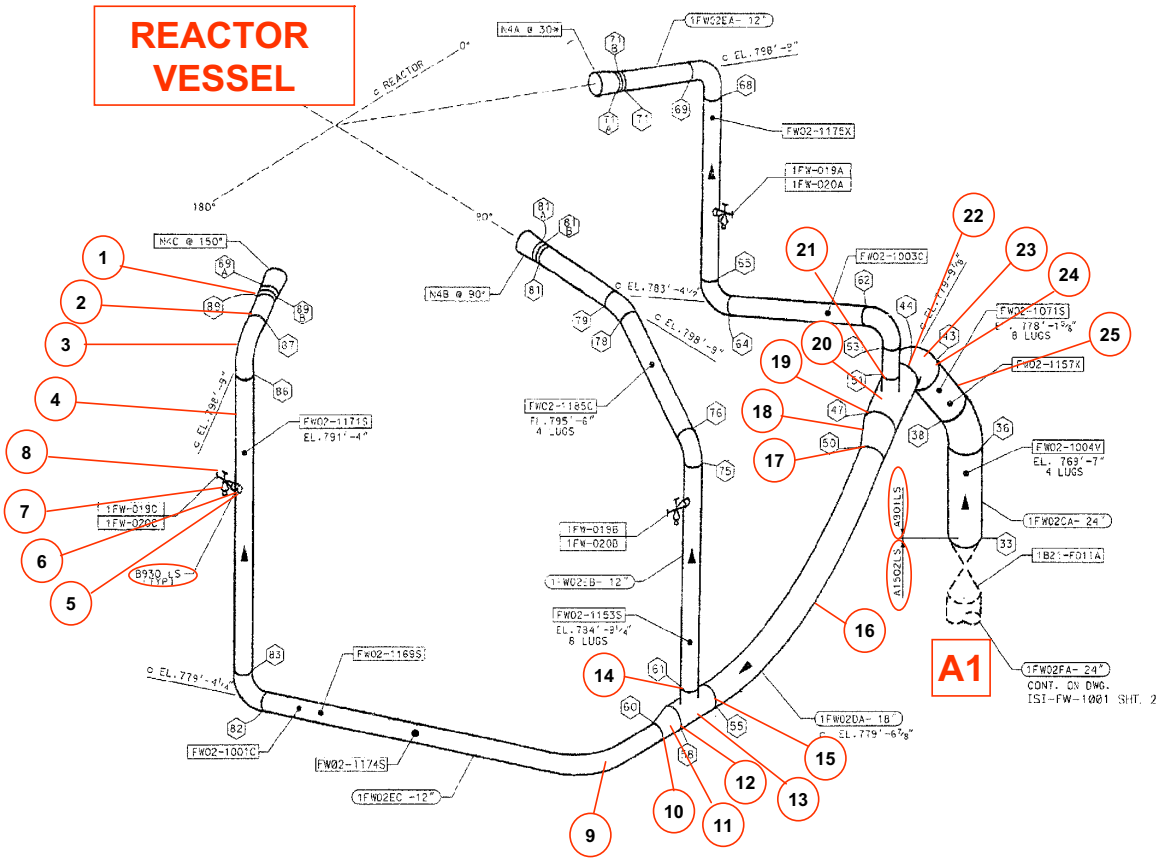

# GROUP 19 – FEEDWATER (Sheet 2 of 6)
# (Covers Worksheets PCS-FW – 1 thru 107)

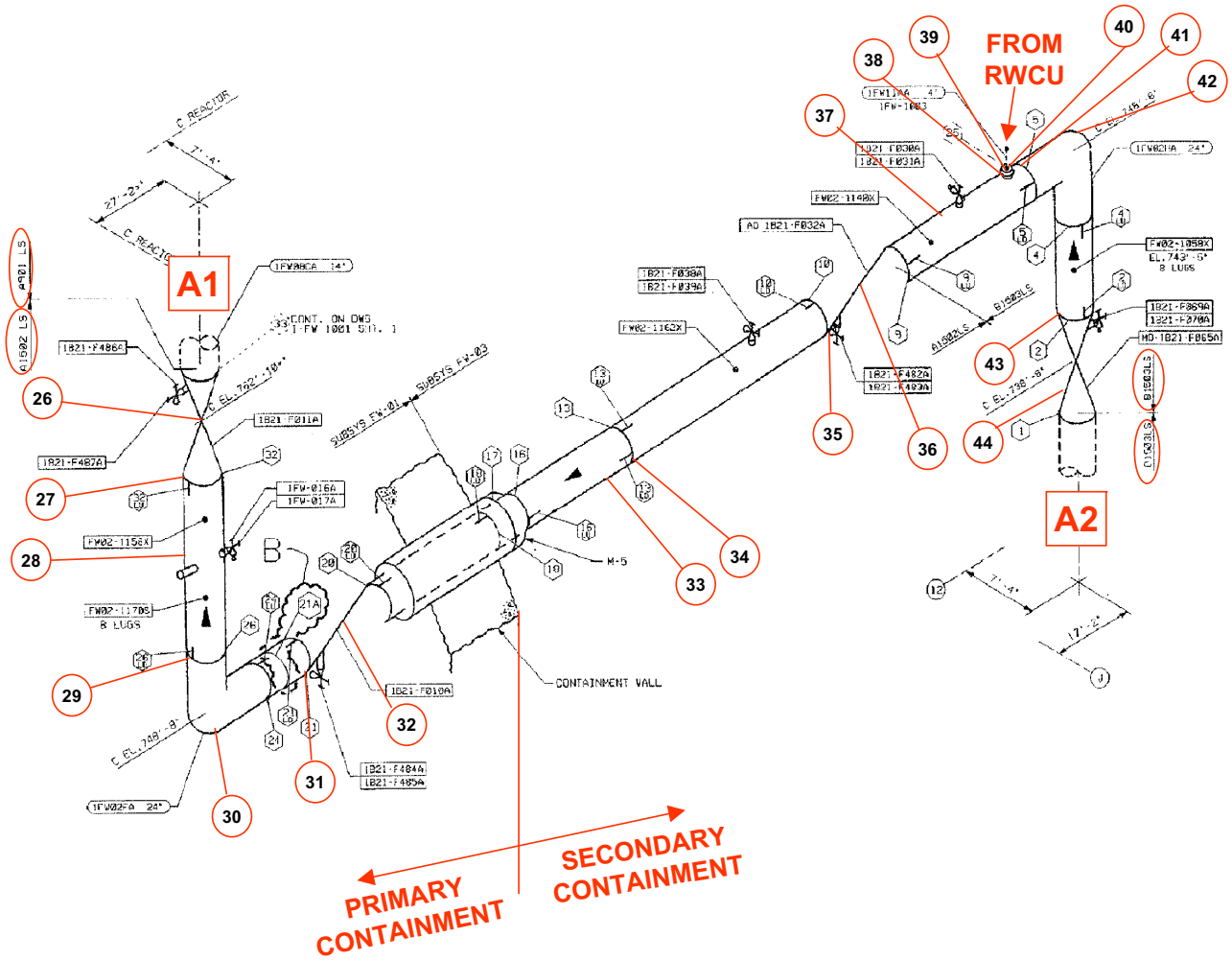

# GROUP 19 – FEEDWATER (Sheet 3 of 6)
# (Covers Worksheets PCS-FW – 1 thru 107)

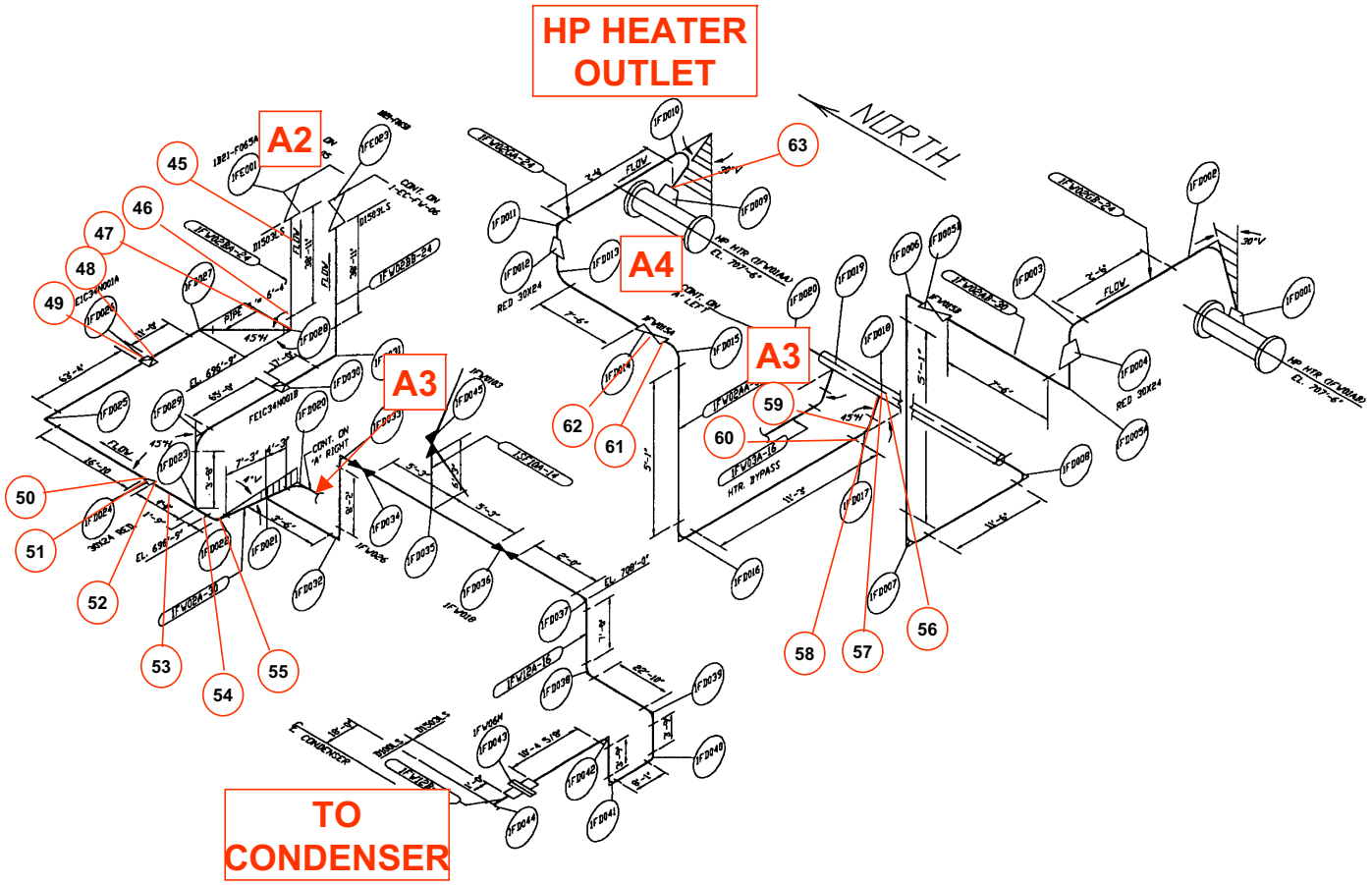

# GROUP 19 – FEEDWATER (Sheet 4 of 6)
# (Covers Worksheets PCS-FW – 1 thru 107)

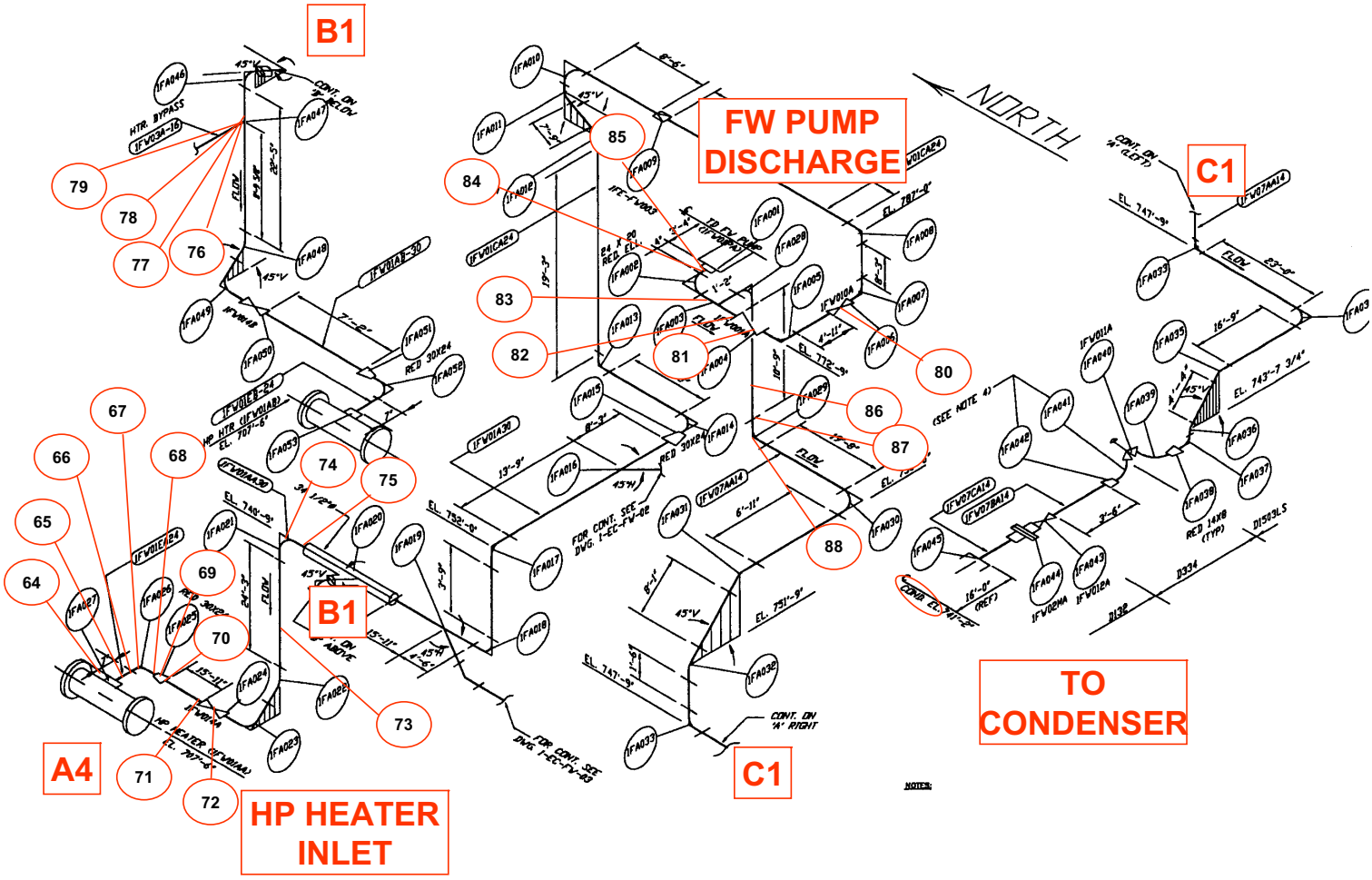

# GROUP 19 – FEEDWATER (Sheet 5 of 6)
# (Covers Worksheets PCS-FW – 1 thru 107)

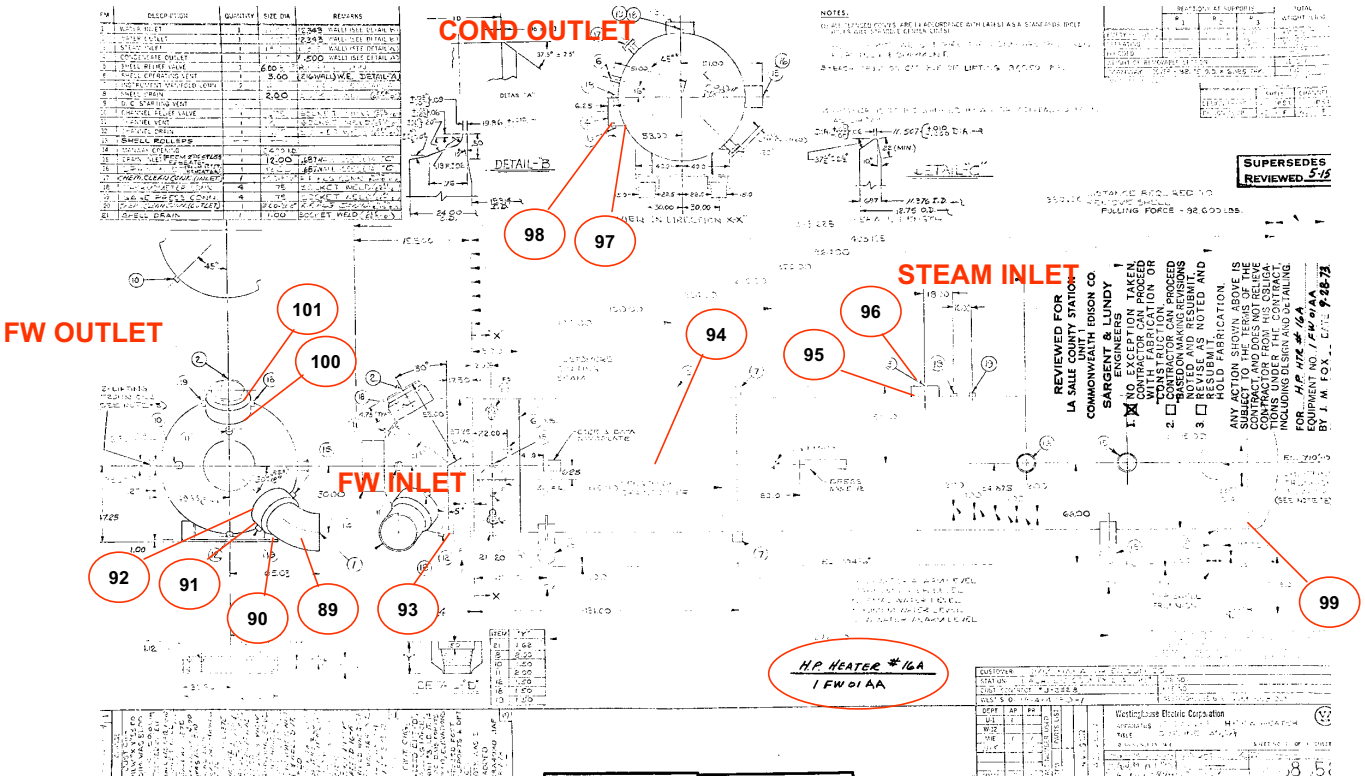


102 HX TUBES

103 TUBE SHEET

104 FITTINGS

105 SUPPORTS (OUTSIDE)

# GROUP 19 – FEEDWATER (Sheet 6 of 6)
# (Covers Worksheets PCS-FW – 1 thru 107)

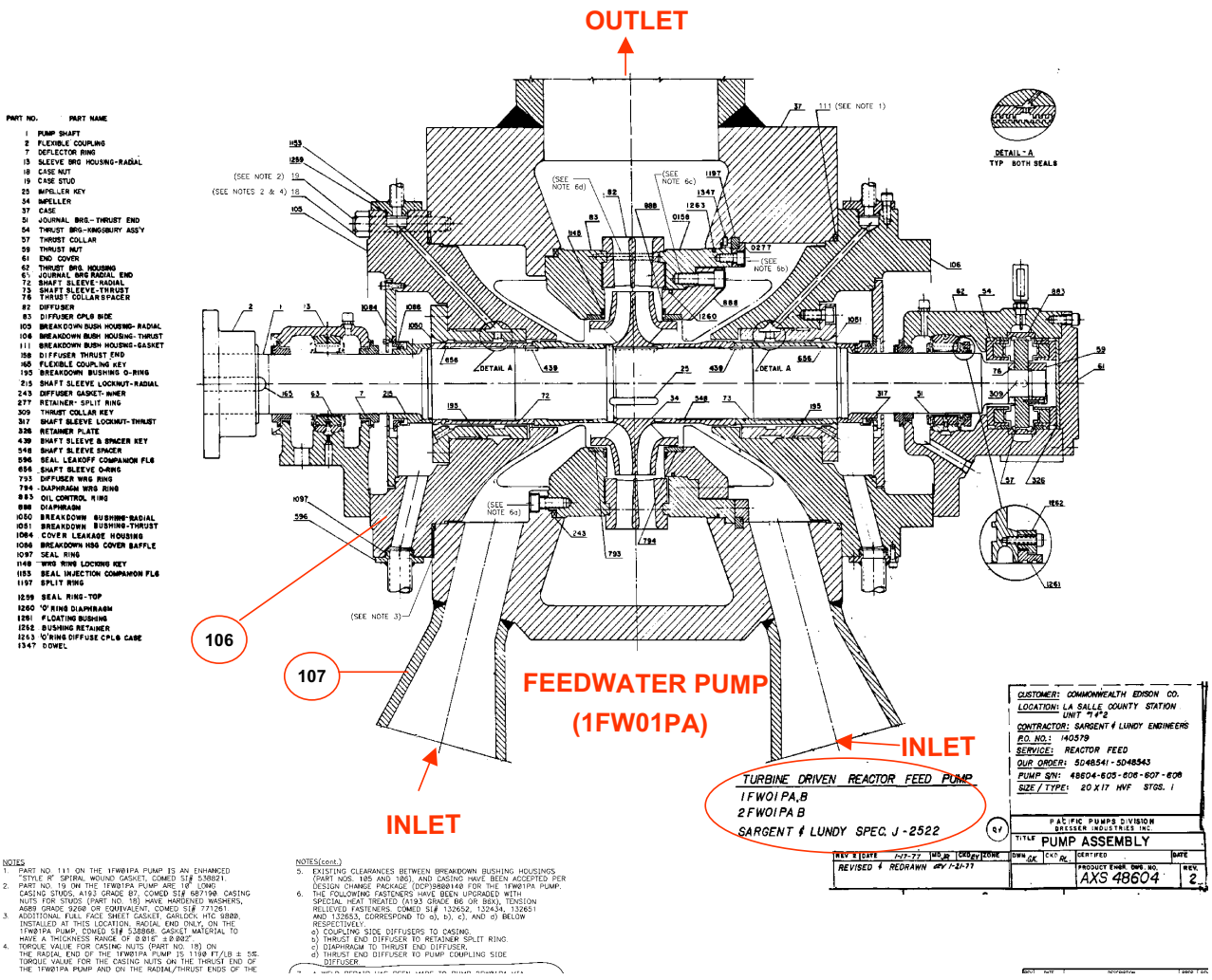

# GROUP 20 – CONTROL ROD DRIVE (Sheet 1 of 4)
# (Covers Worksheets AS-CRD – 1 thru 62)

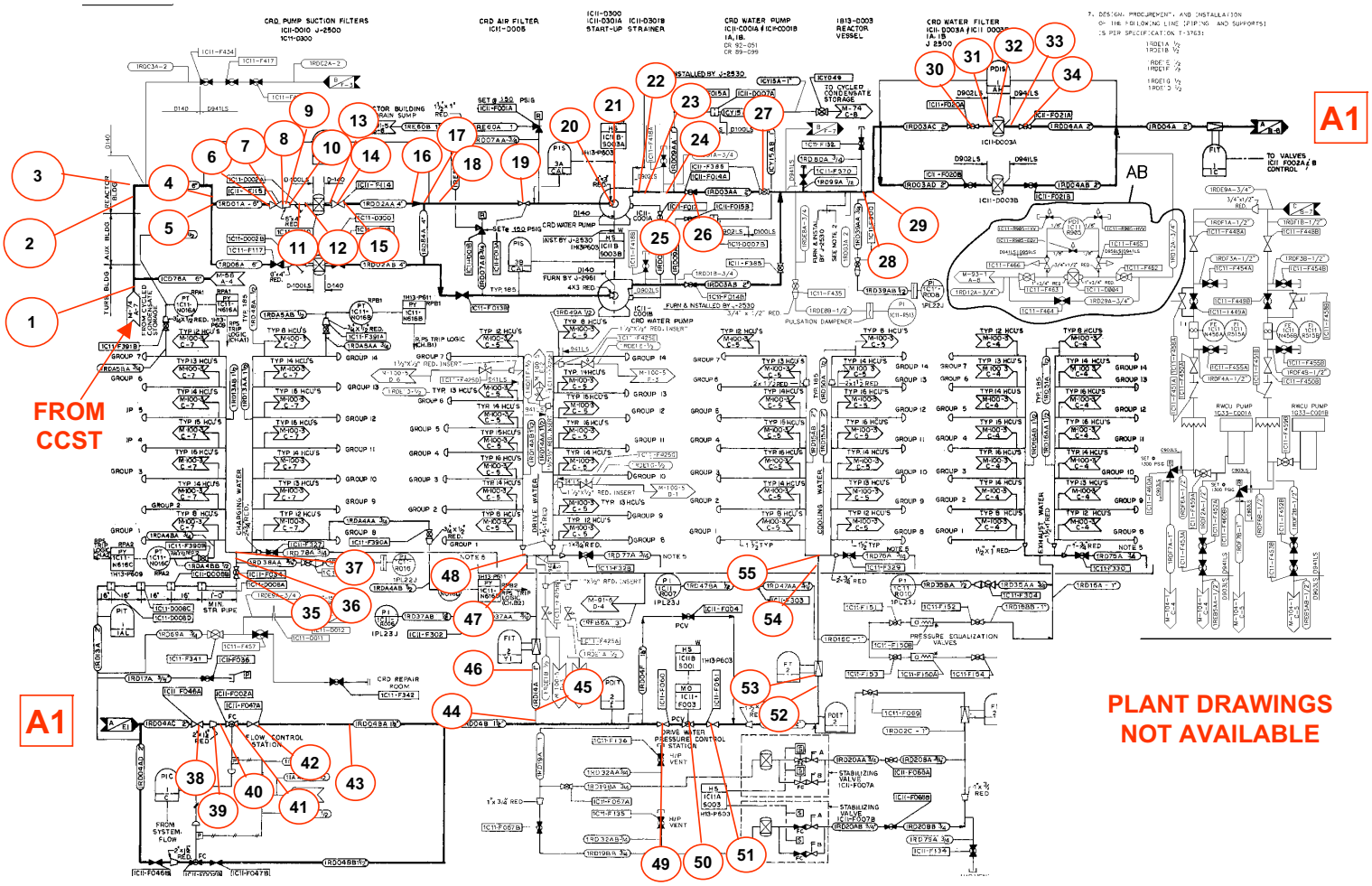

# GROUP 20 – CONTROL ROD DRIVE (Sheet 2 of 4)
# (Covers Worksheets AS-CRD – 1 thru 62)

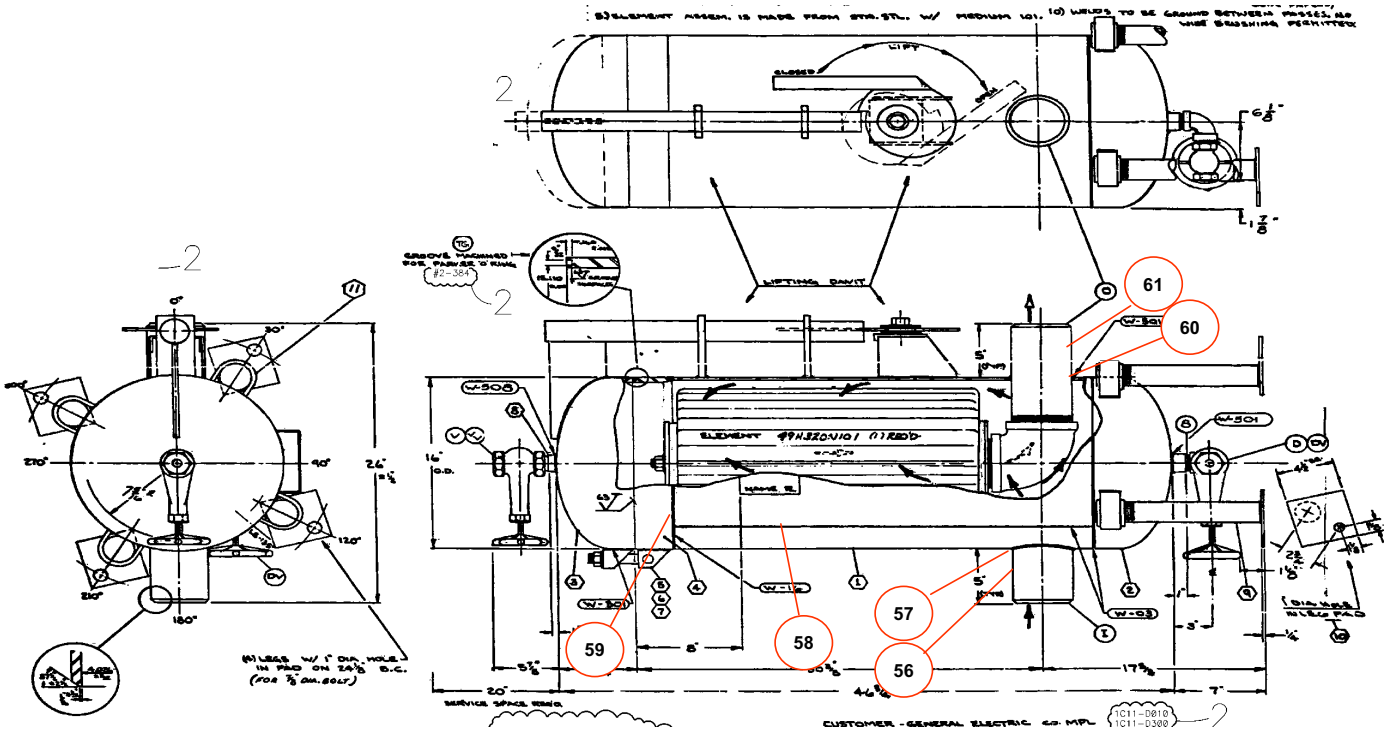


**PUMP INLET FILTER (1C11-D010)**

# GROUP 20 – CONTROL ROD DRIVE (Sheet 3 of 4)
## (Covers Worksheets AS-CRD – 1 thru 62)

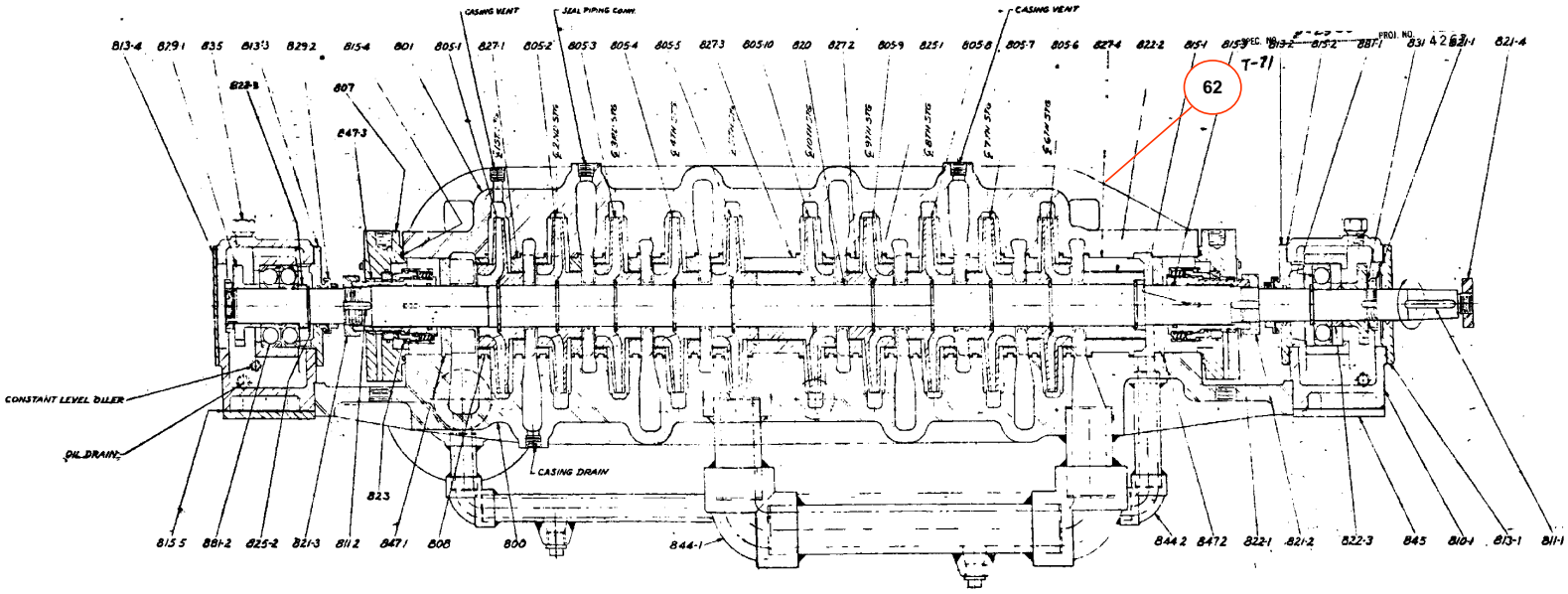


**CRD PUMP**
**(1C11-C001A)**

# GROUP 20 – CONTROL ROD DRIVE (Sheet 4 of 4)
# (Covers Worksheets AS-CRD – 1 thru 62)

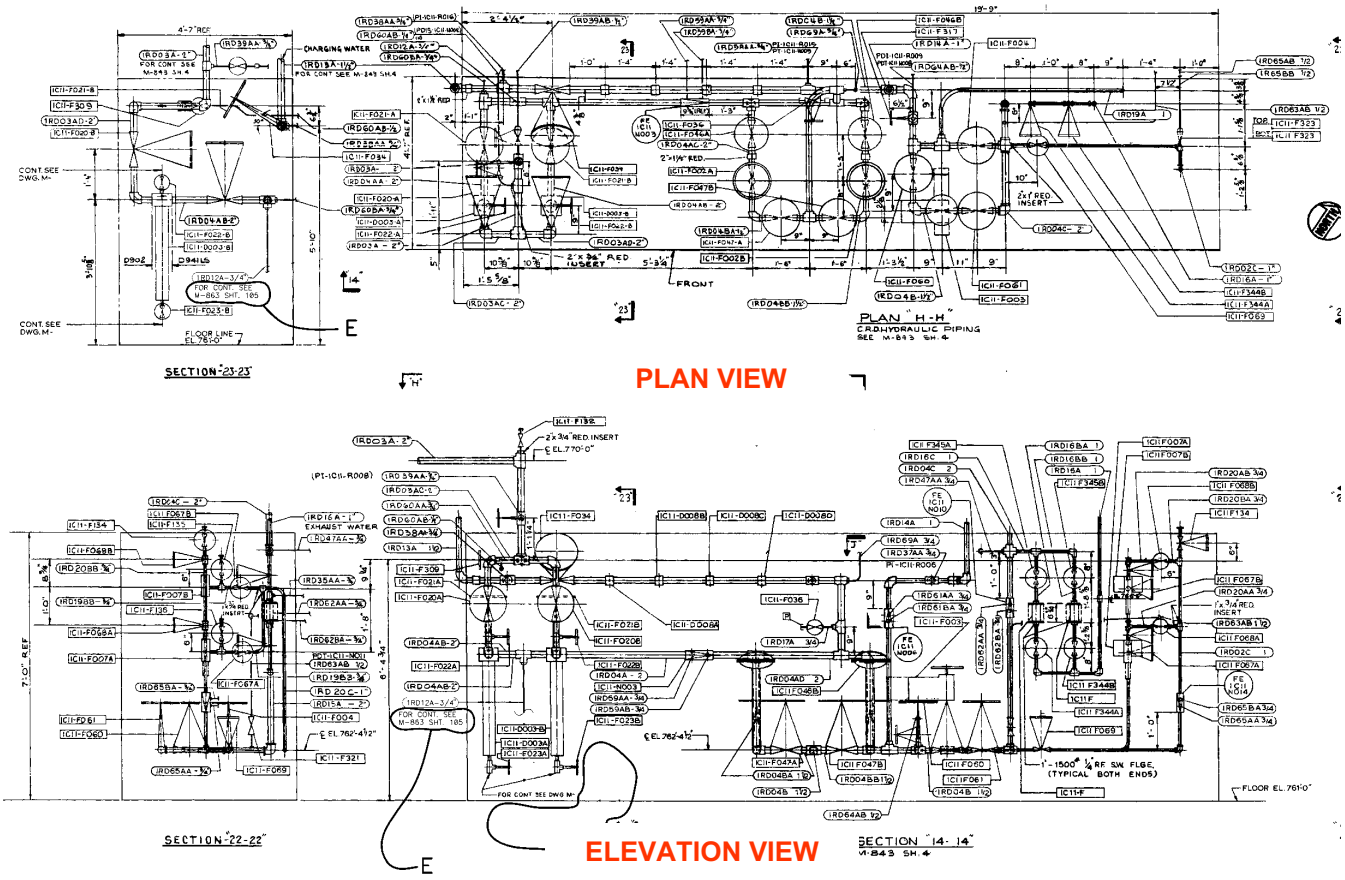


**TYPICAL CRD HYDRAULIC PIPING**
**(FOR REFERENCE ONLY)**

# GROUP 21 – MAIN CONDENSER (Sheet 1 of 1)
# (Covers Worksheets PCS-CONDNSR – 1 thru 32)

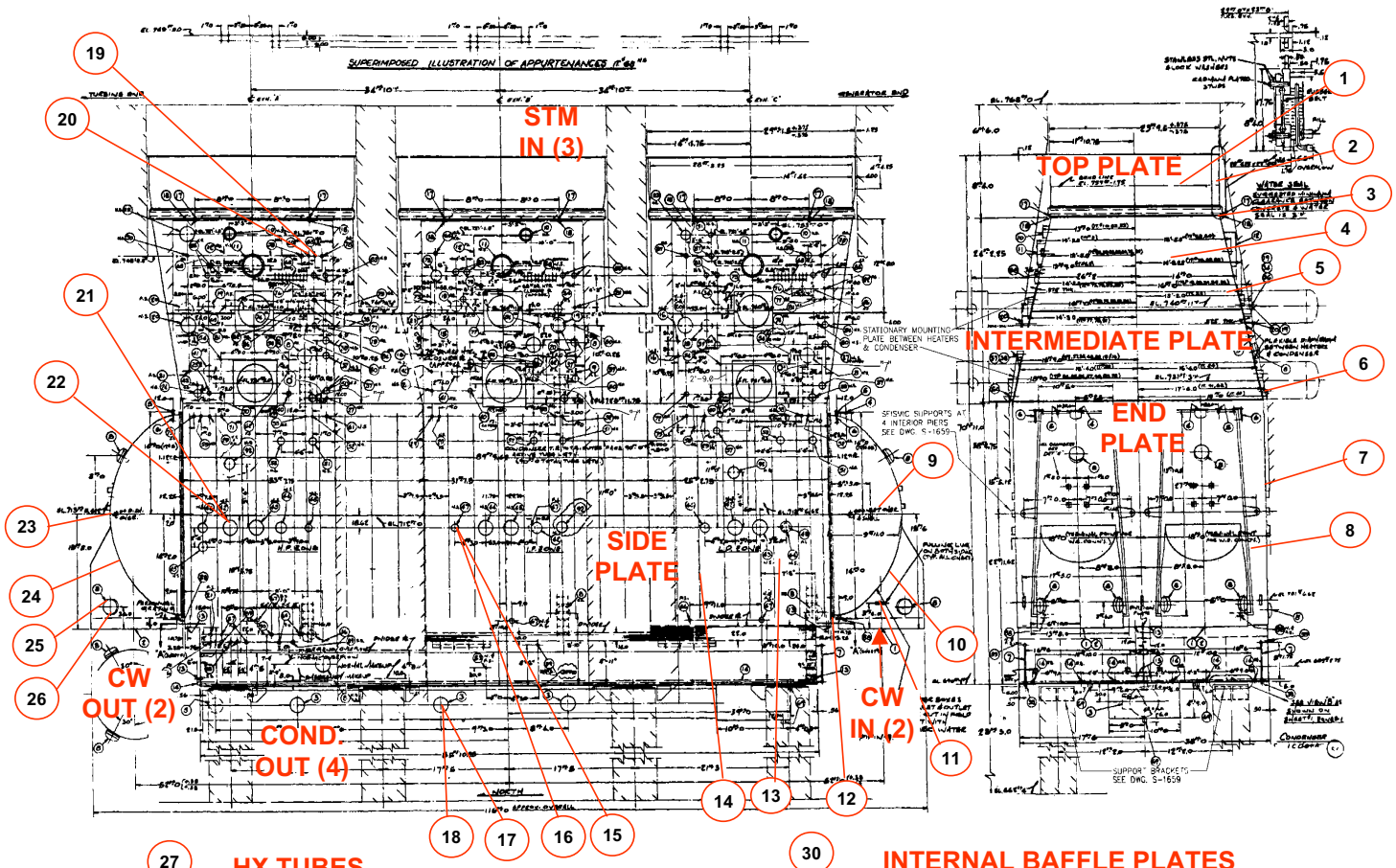


27 HX TUBES

28 TUBE SHEET

29 TUBE SUPPORTS

30 INTERNAL BAFFLE PLATES

31 OTHER COMPONENT REPAIR SLEEVES

32 TUBE REPAIR SLEEVES/PLUGS

# GROUP 22 – CONDENSATE
# CONDENSER DISCHARGE PIPING (Sheet 1 of 4)
# (Covers Worksheets PCS-CONDISCH – 1 thru 53)

**PLANT DRAWINGS NOT AVAILABLE**

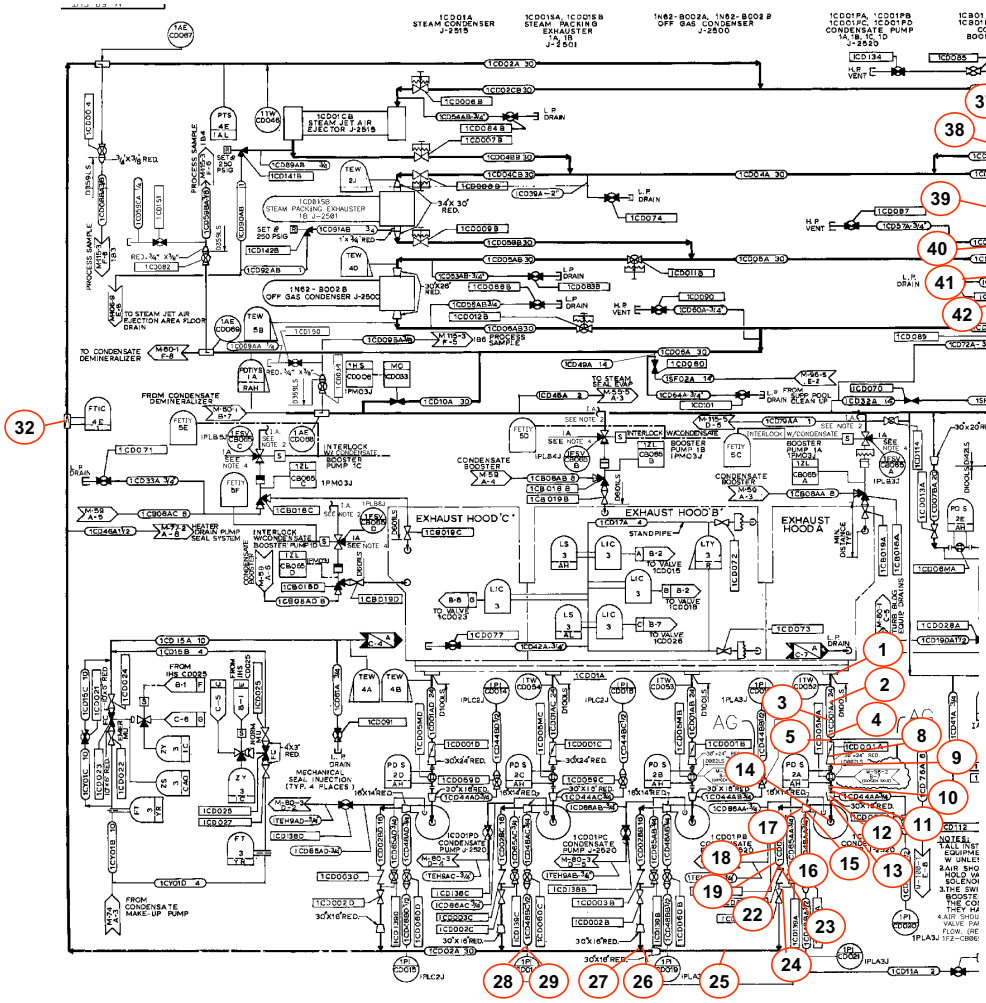


| | |
|---|---|
| 6 | Pipe – Elbow – 24” |
| 7 | Elbow – 24” |
| 20 | Pipe – Elbow – 16” |
| 21 | Elbow – 16” |
| 30 | Pipe – Elbow – 30” |
| 31 | Elbow – 30” |
| 45 | Condensate Pump Body |
| 46 | Pump Suction Nozzle |
| 47 | Pump Discharge Nozzle |

# GROUP 22 – CONDENSATE
# CONDENSER DISCHARGE PIPING (Sheet 2 of 4)
# (Covers Worksheets PCS-CONDISCH – 1 thru 53)

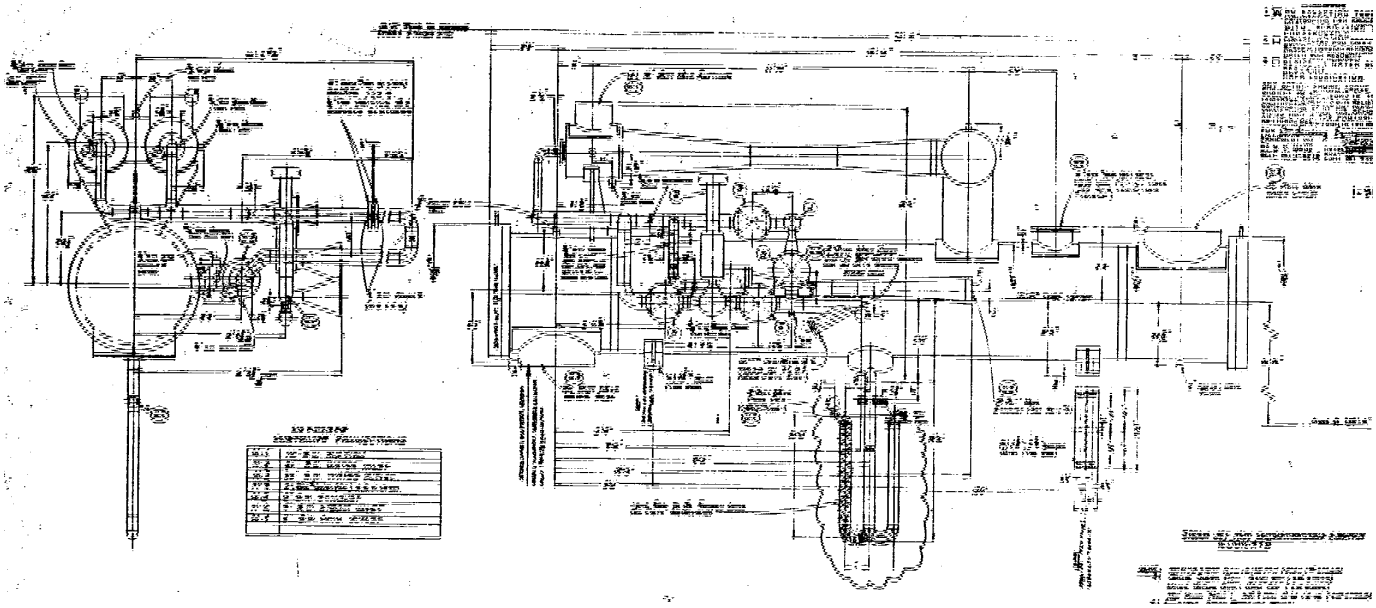

**STEAM JET AIR EJECTOR**
**(FOR REFERENCE ONLY)**

# GROUP 22 – CONDENSATE
# CONDENSER DISCHARGE PIPING (Sheet 3 of 4)
# (Covers Worksheets PCS-CONDISCH – 1 thru 53)

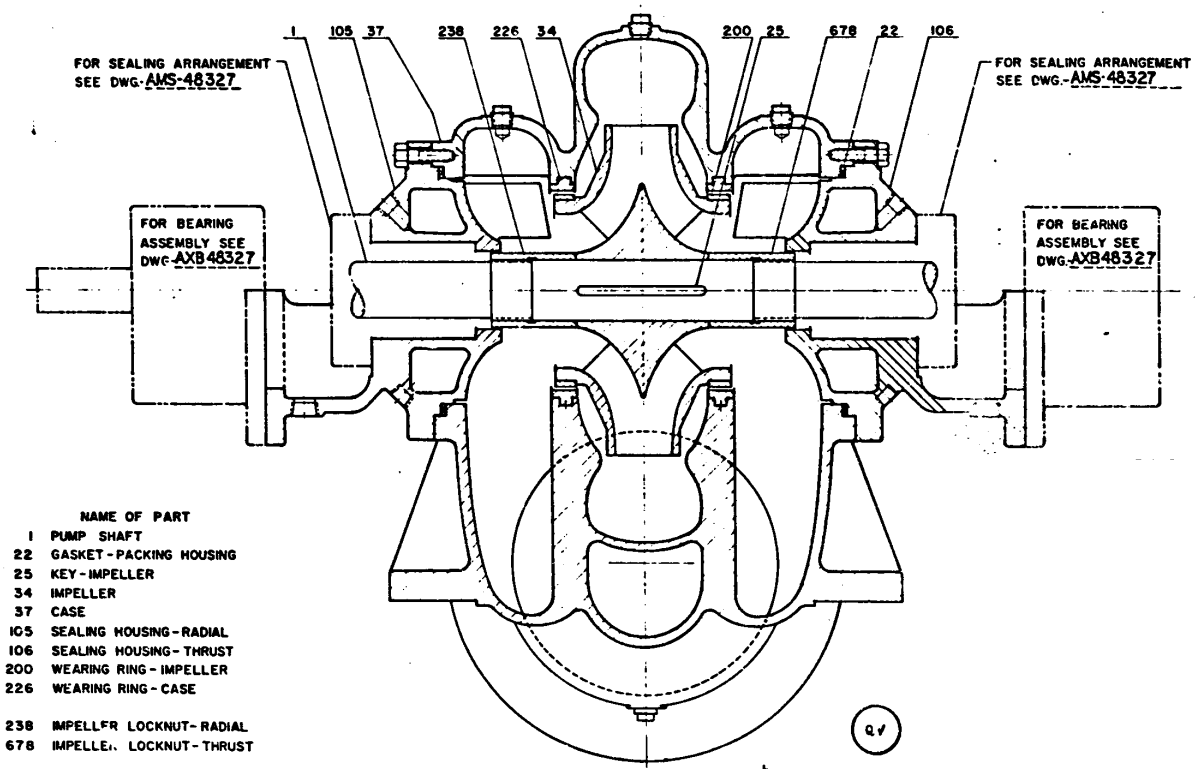


**CONDENSATE PUMP**
**(FOR REFERENCE ONLY)**

# GROUP 22 – CONDENSATE
# CONDENSER DISCHARGE PIPING (Sheet 4 of 4)
# (Covers Worksheets PCS-CONDISCH – 1 thru 53)

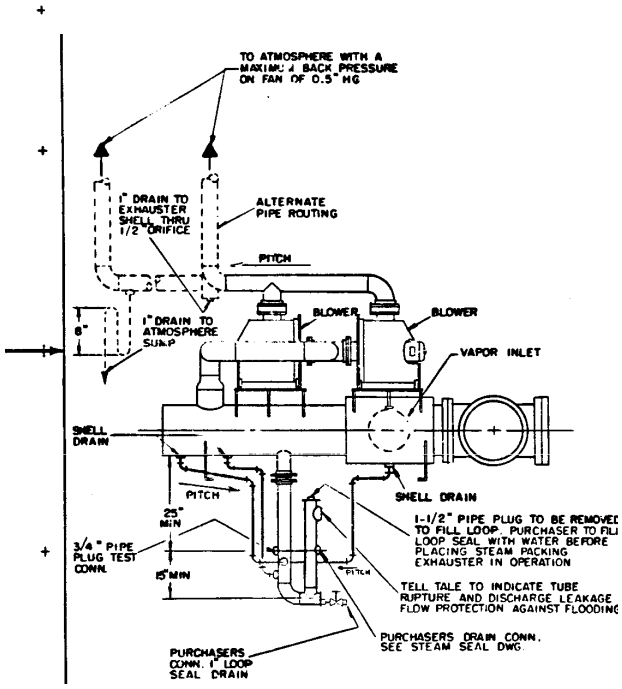


**STEAM PACKING EXHAUSTER**
**(FOR REFERENCE ONLY)**

# GROUP 23 – CONDENSATE
# CONDENSATE PIPING TO BOOSTER PUMP (Sheet 1 of 3)
# (Covers Worksheets PCS-CONDBPMP – 1 thru 57)

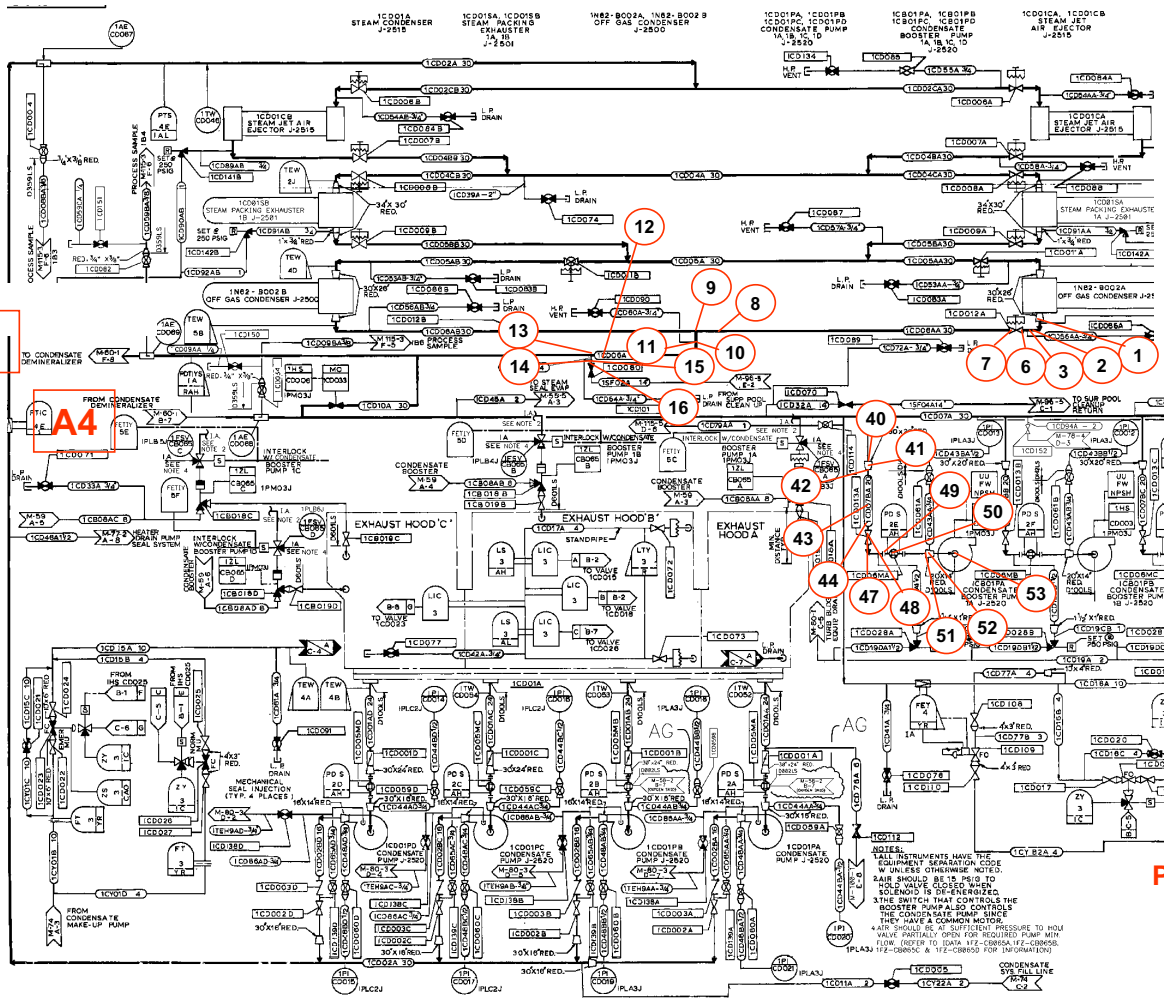


4 Pipe – Elbow – 30”

5 Elbow – 30”

17 Pipe – Elbow – 14”

18 Elbow – 14”

45 Pipe – Elbow – 20”

46 Elbow – 20”

**PLANT DRAWINGS NOT AVAILABLE**

# GROUP 23 – CONDENSATE
# CONDENSATE PIPING TO BOOSTER PUMP (Sheet 2 of 3)
# (Covers Worksheets PCS-CONDBPMP – 1 thru 57)

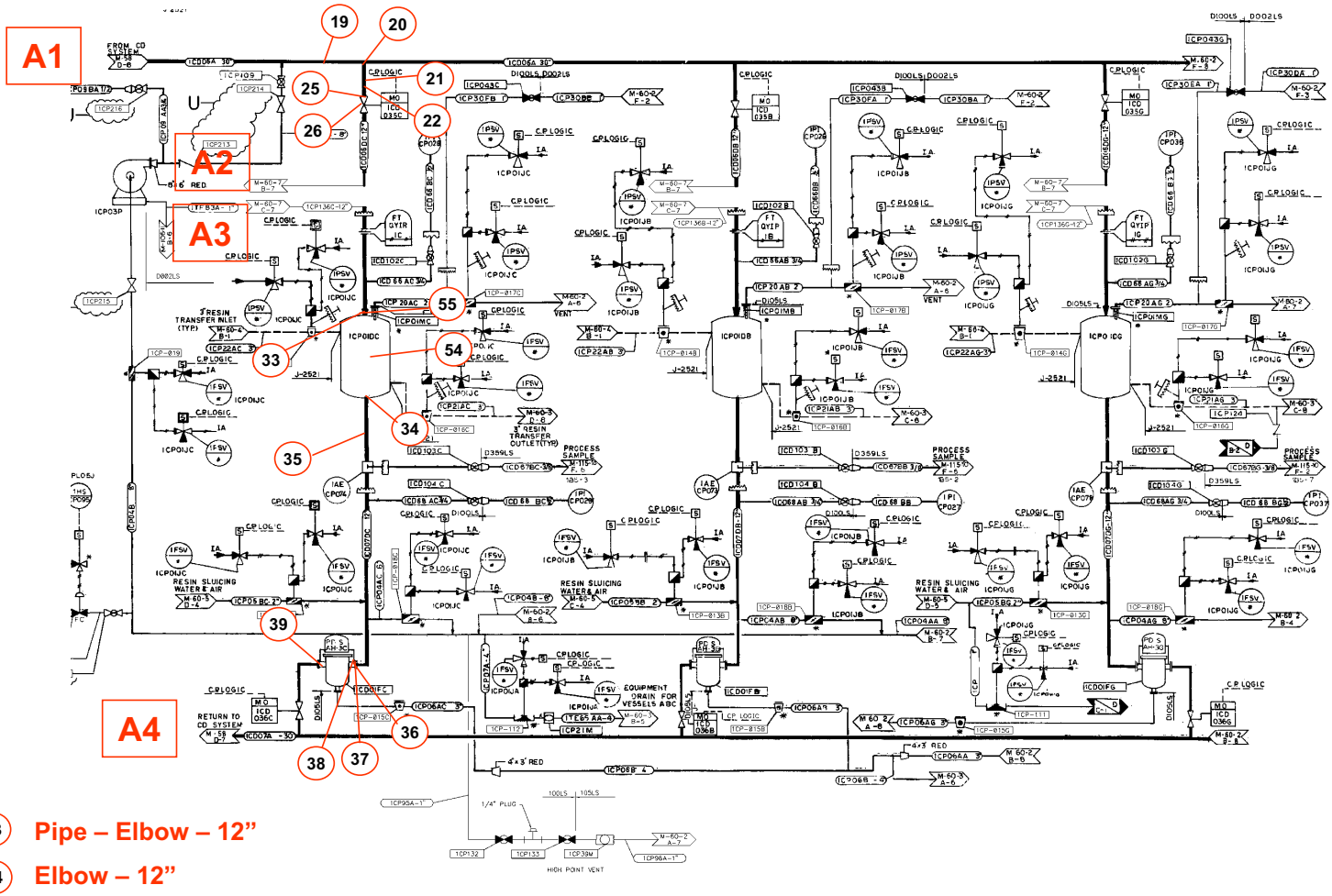


23 Pipe – Elbow – 12”

24 Elbow – 12”

# GROUP 23 – CONDENSATE
# CONDENSATE PIPING TO BOOSTER PUMP (Sheet 3 of 3)
# (Covers Worksheets PCS-CONDBPMP – 1 thru 57)

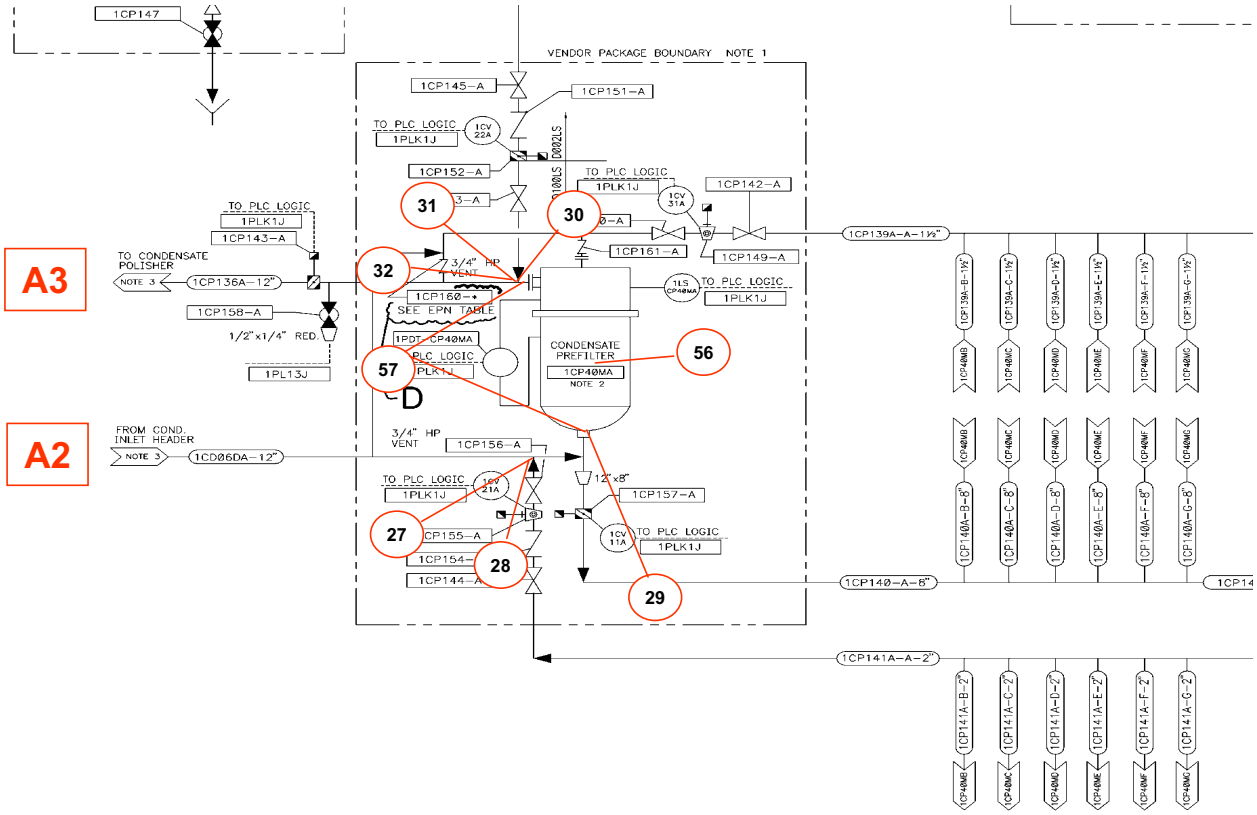

# GROUP 24 – CONDENSATE BOOSTER PUMP PIPING TO FW PUMP (Sheet 1 of 6)
## (Covers Worksheets PCS-CONDFWPMP – 1 thru 65)

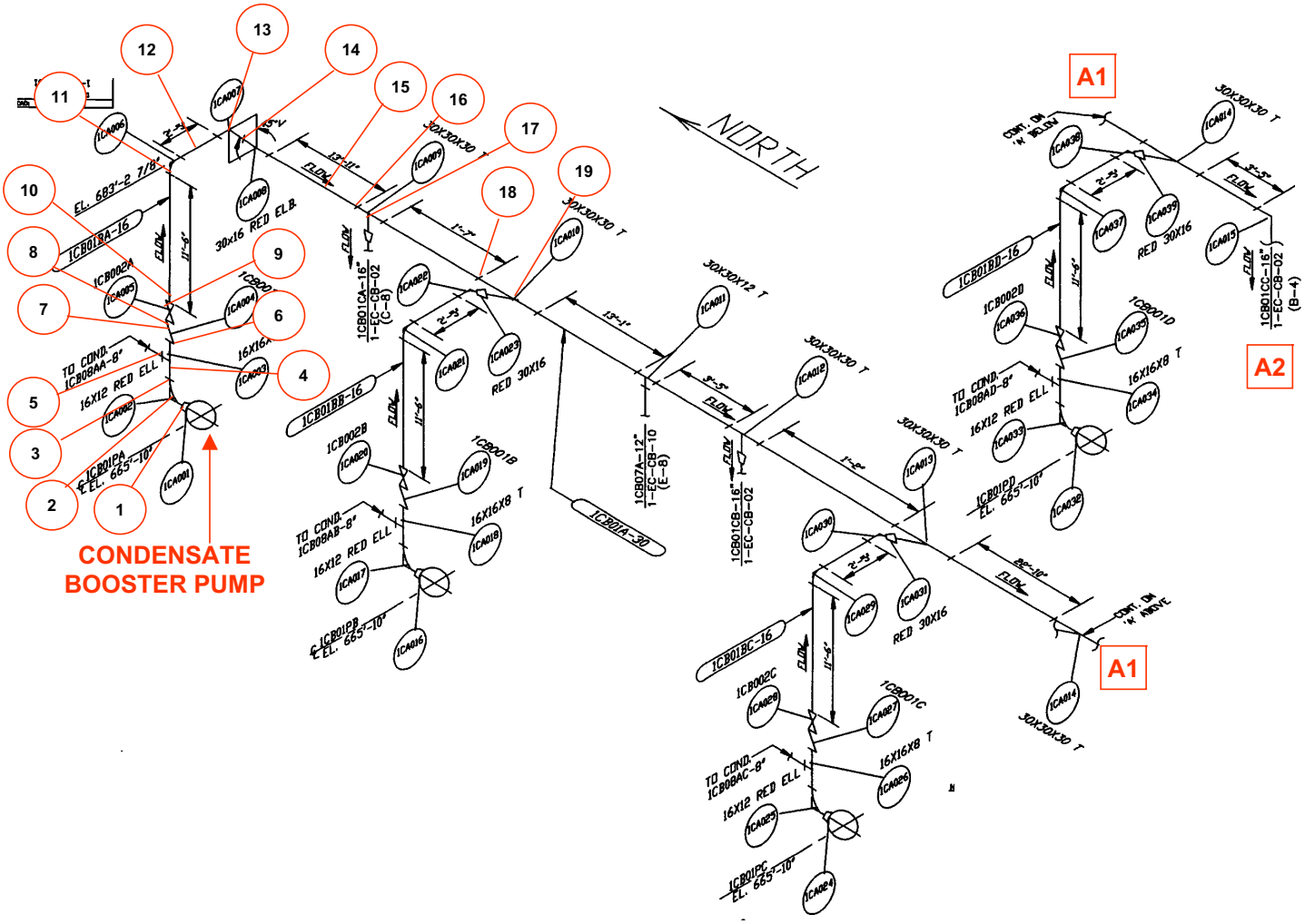

# GROUP 24 – CONDENSATE
# BOOSTER PUMP PIPING TO FW PUMP (Sheet 2 of 6)
# (Covers Worksheets PCS-CONDFWPMP – 1 thru 65)

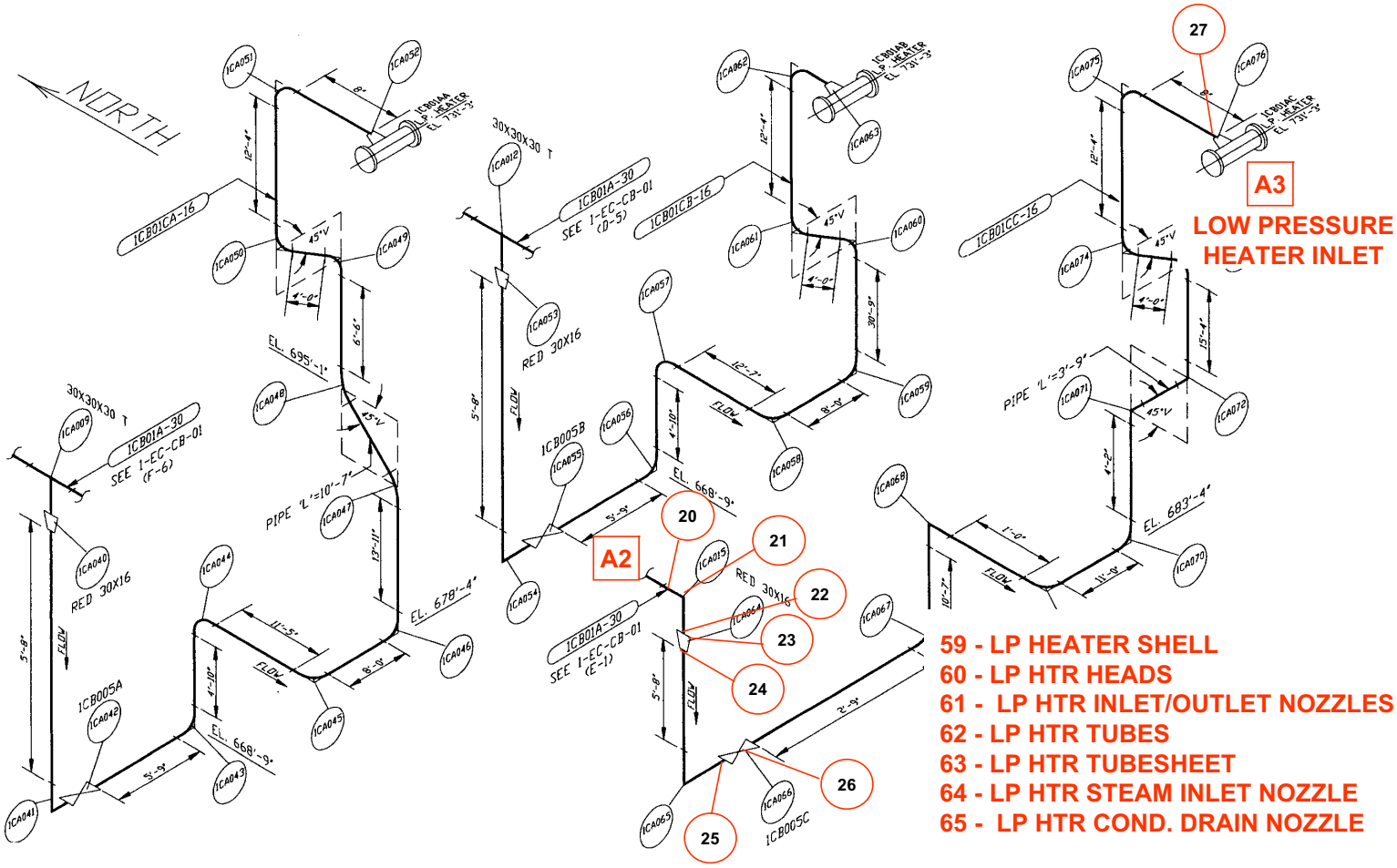

# GROUP 24 – CONDENSATE
# BOOSTER PUMP PIPING TO FW PUMP (Sheet 3 of 6)
# (Covers Worksheets PCS-CONDFWPMP – 1 thru 65)

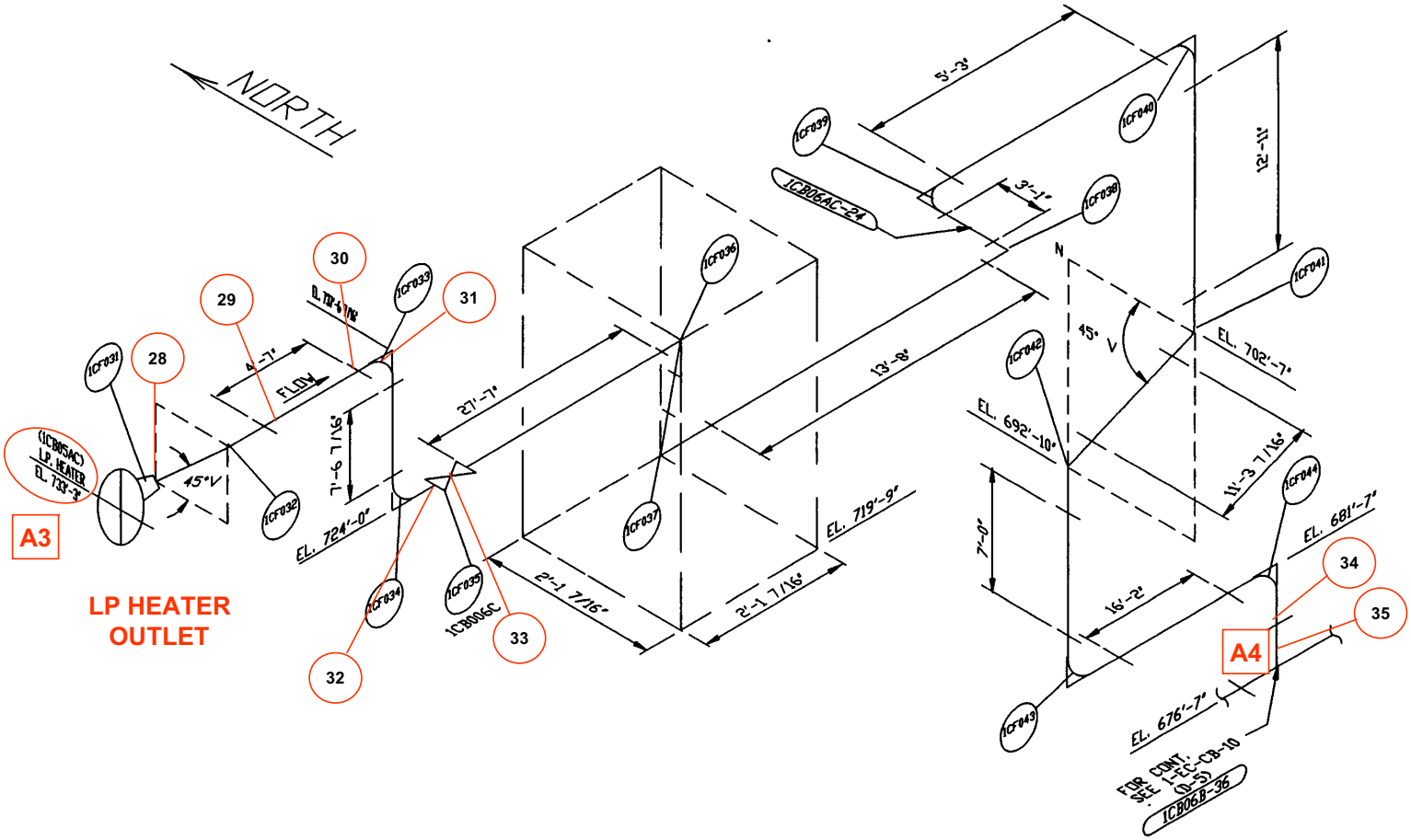

# GROUP 24 – CONDENSATE
# BOOSTER PUMP PIPING TO FW PUMP (Sheet 4 of 6)
# (Covers Worksheets PCS-CONDFWPMP – 1 thru 65)

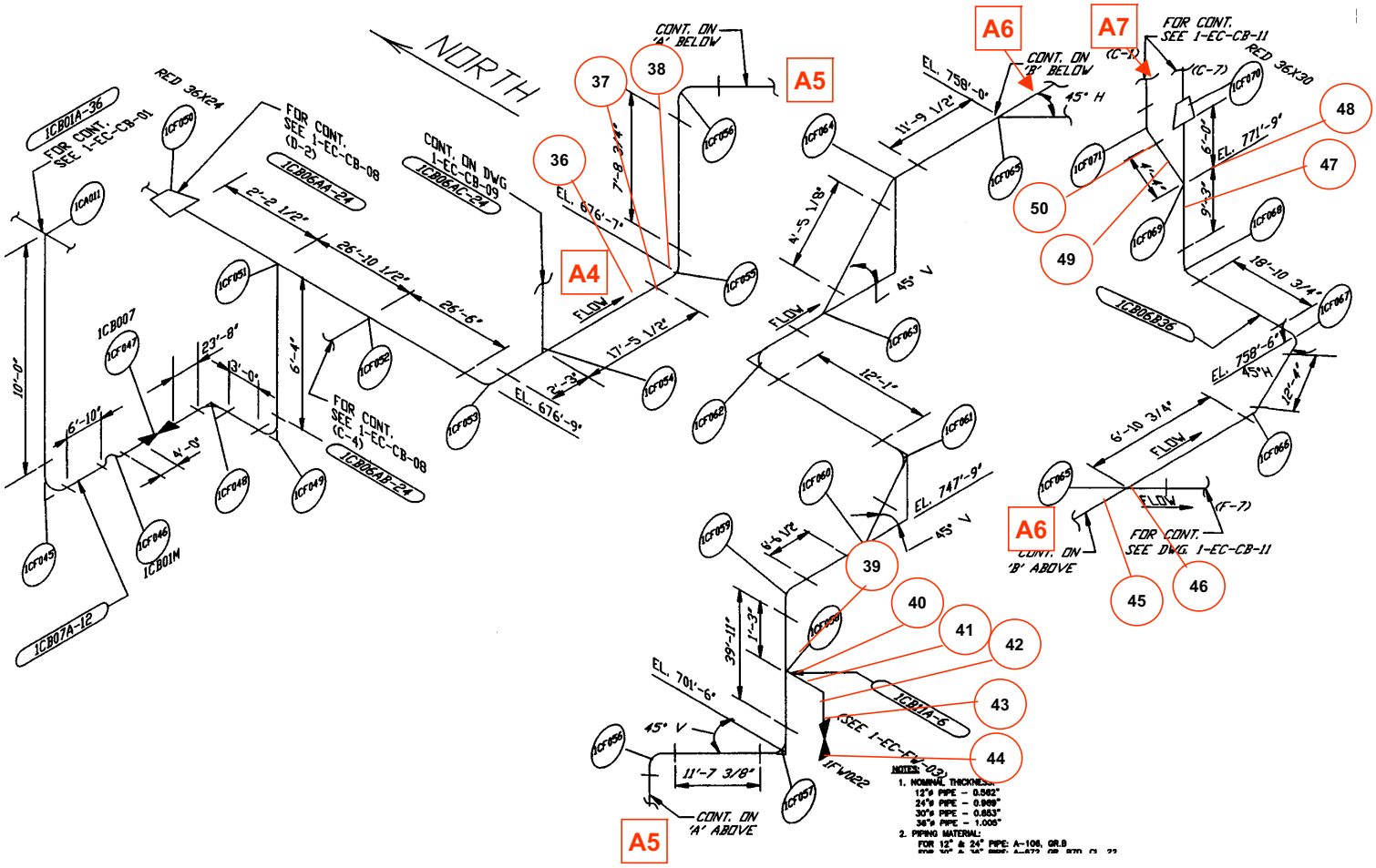

# GROUP 24 – CONDENSATE
# BOOSTER PUMP PIPING TO FW PUMP (Sheet 5 of 6)
# (Covers Worksheets PCS-CONDFWPMP – 1 thru 65)

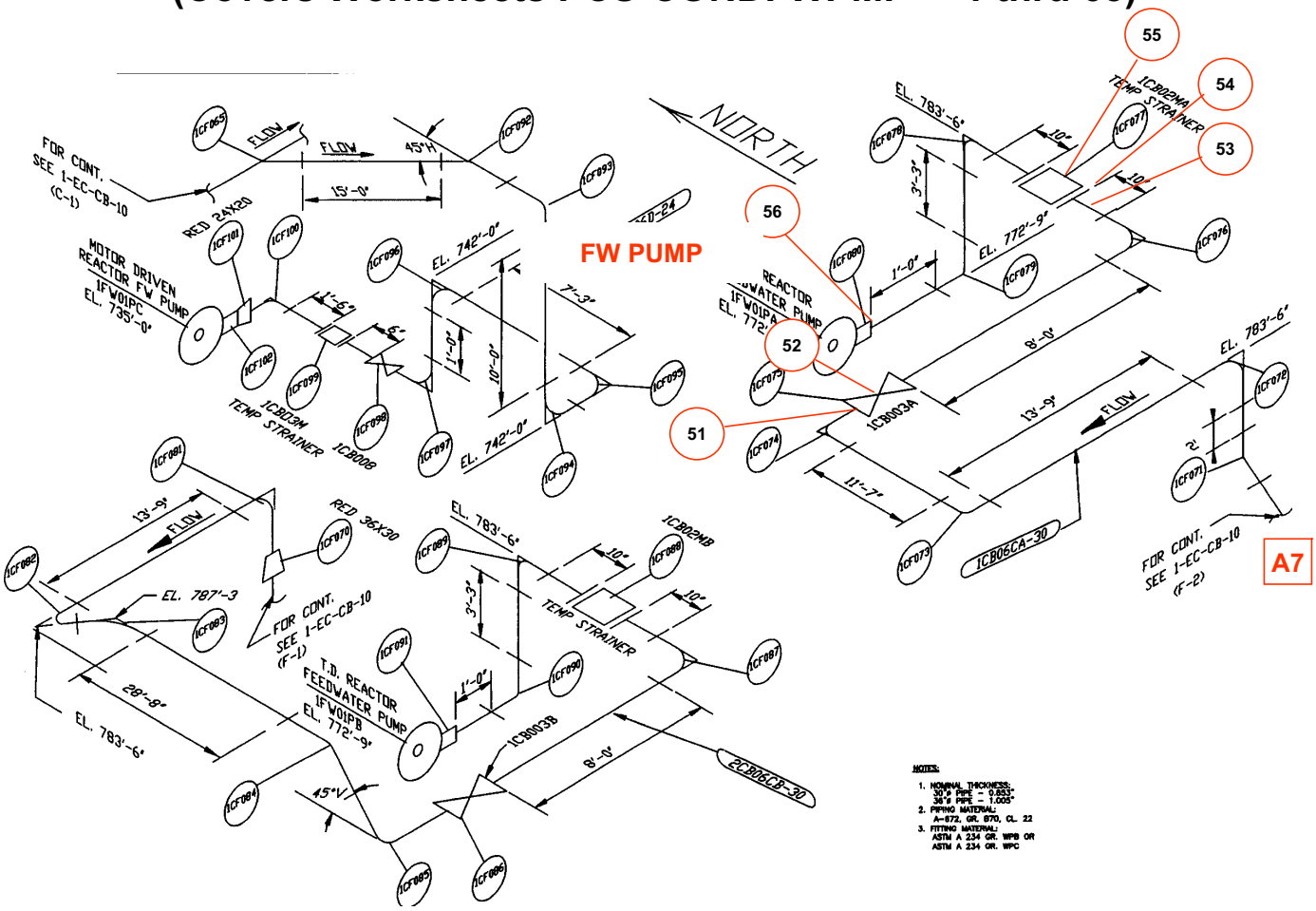

# GROUP 24 – CONDENSATE BOOSTER PUMP PIPING TO FW PUMP (Sheet 6 of 6)
## (Covers Worksheets PCS-CONDFWPMP – 1 thru 65)

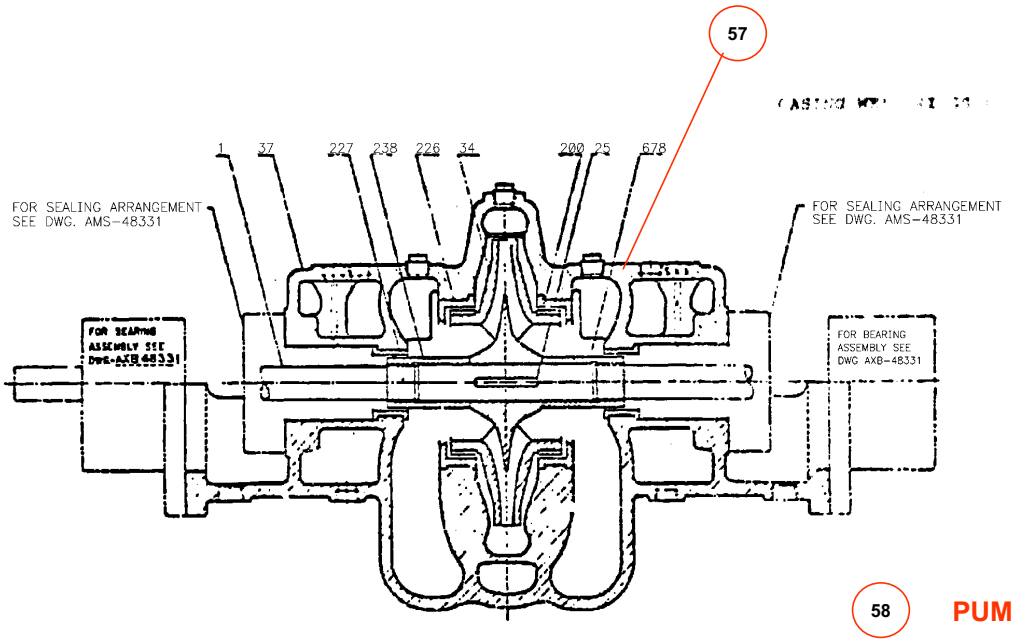


**CONDENSATE BOOSTER PUMP (1CB01PA)**

# GROUP 25 – REACTOR WATER CLEANUP
# RR PIPING to PUMPS (Sheet 1 of 5)
# (Covers Worksheets SS-RWCUPMPS – 1 thru 65)

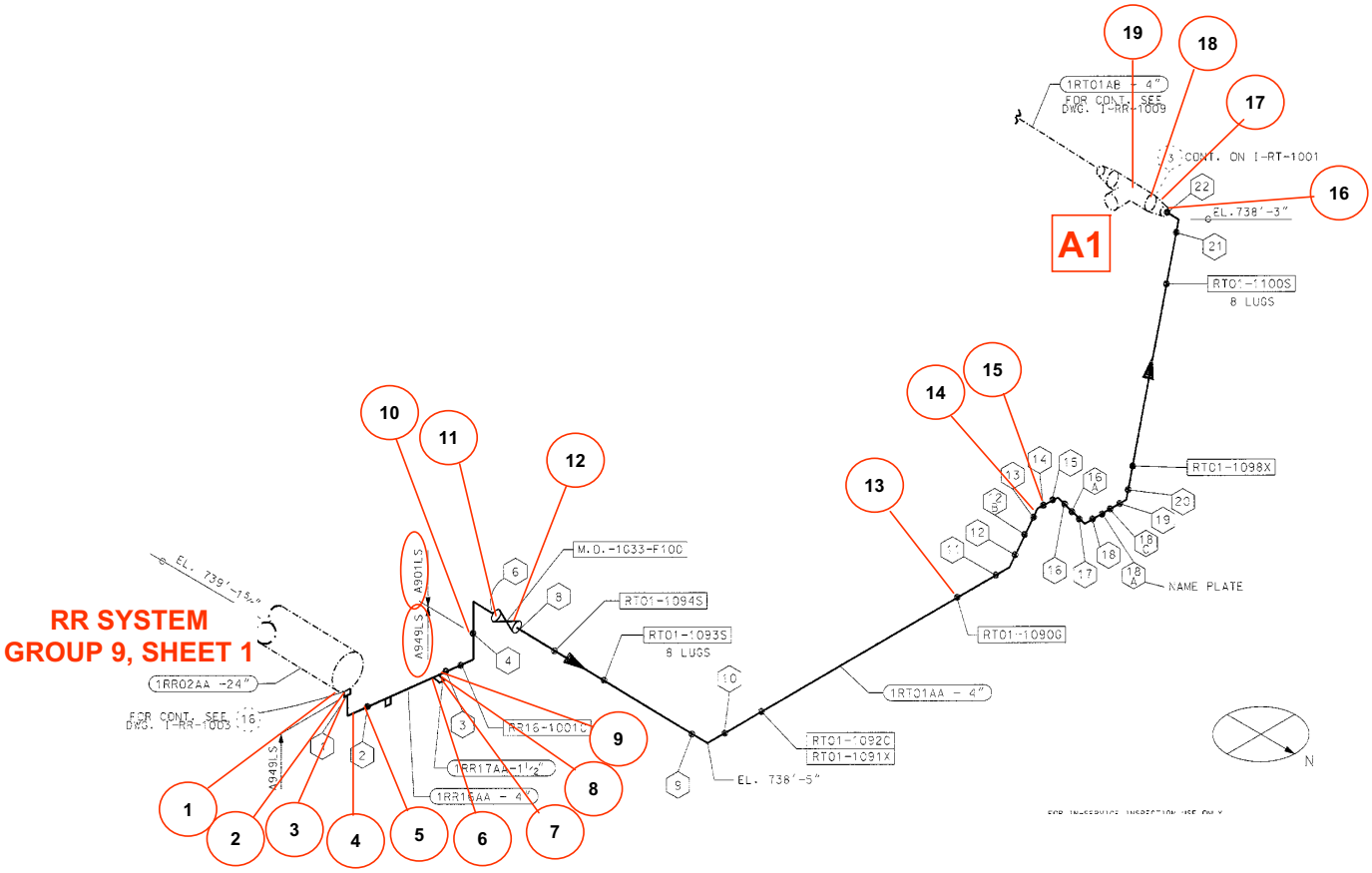

# GROUP 25 – REACTOR WATER CLEANUP
# RR PIPING to PUMPS (Sheet 2 of 5)
# (Covers Worksheets SS-RWCUPMPS – 1 thru 65)

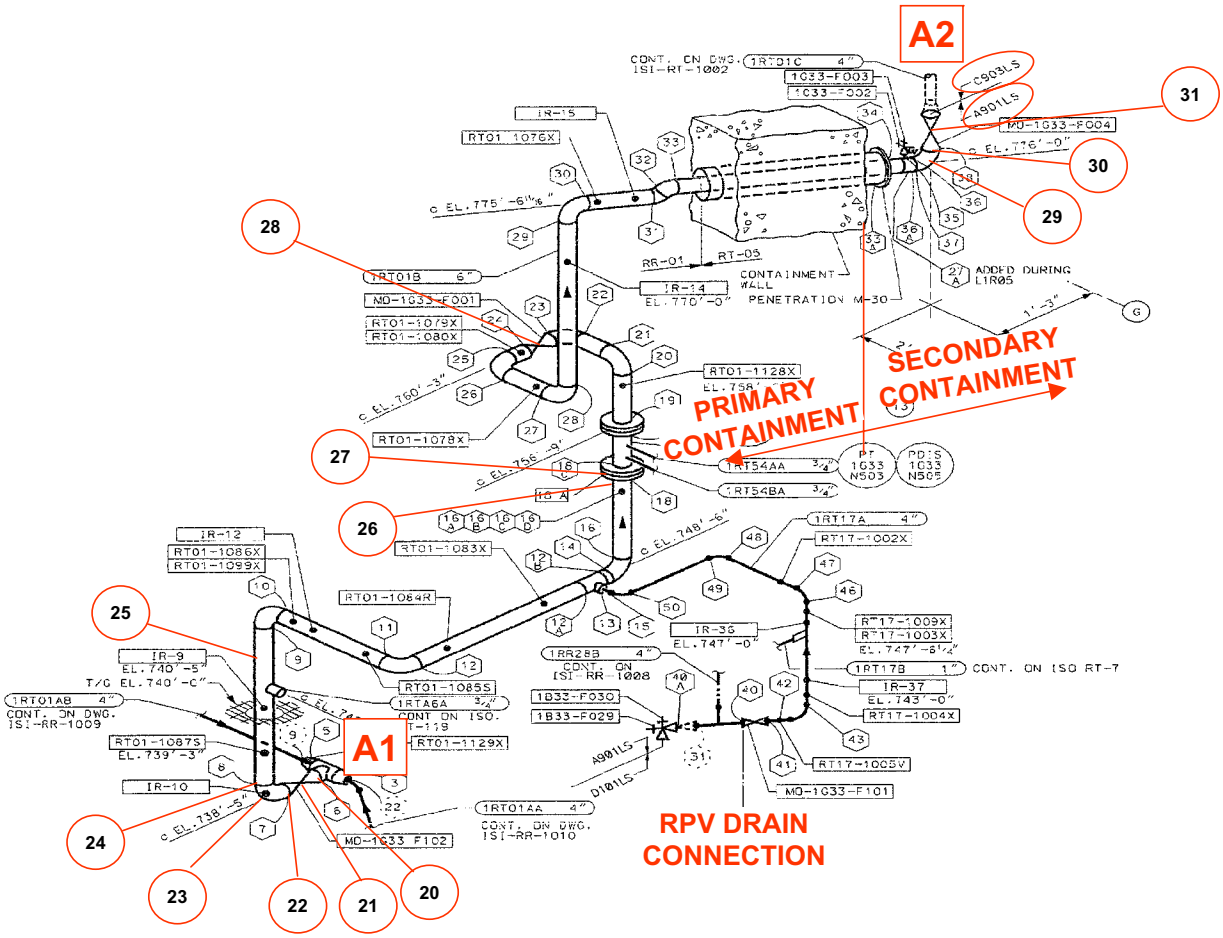

# GROUP 25 – REACTOR WATER CLEANUP
# RR PIPING to PUMPS (Sheet 3 of 5)
# (Covers Worksheets SS-RWCUPMPS – 1 thru 65)

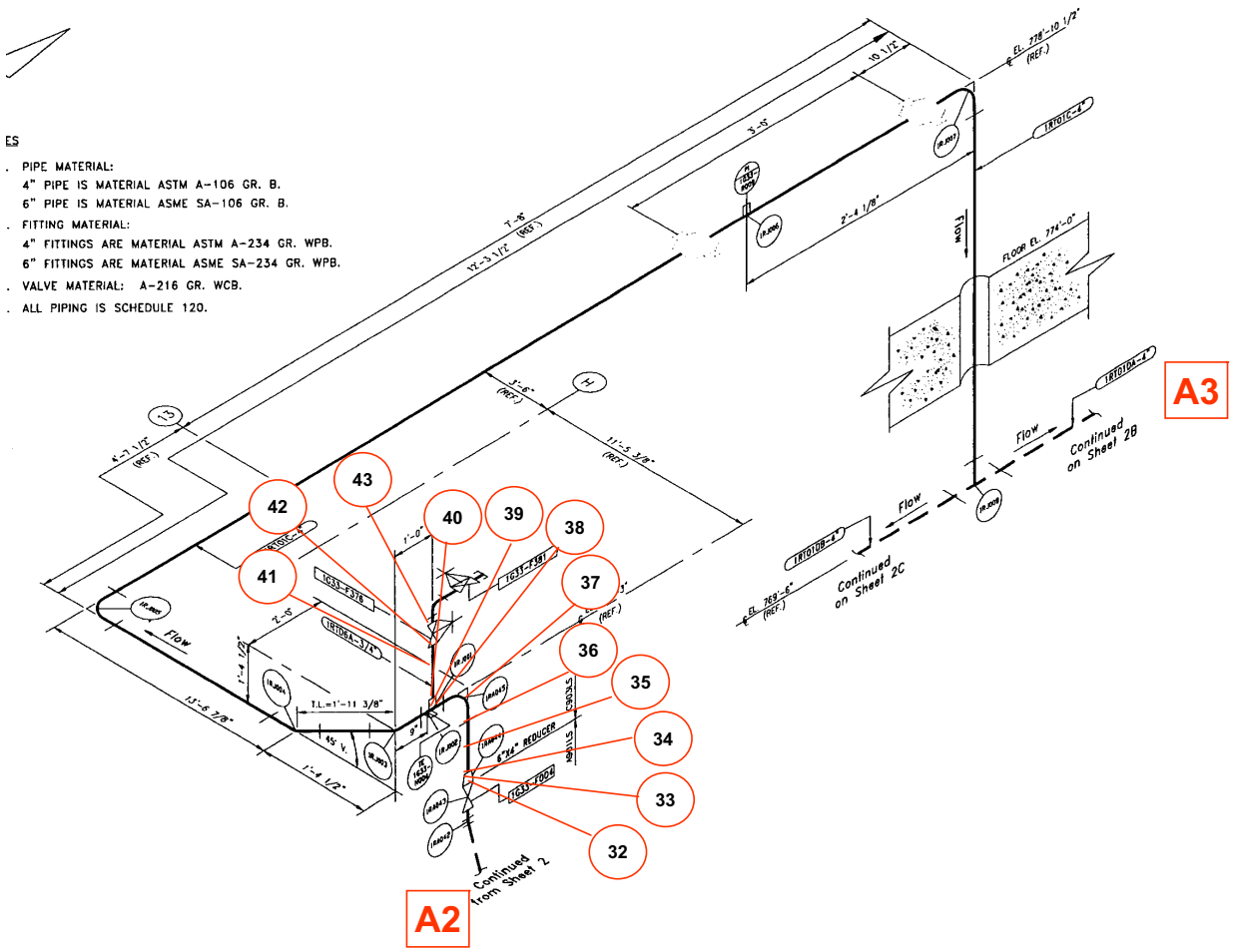

# GROUP 25 – REACTOR WATER CLEANUP
# RR PIPING to PUMPS (Sheet 4 of 5)
# (Covers Worksheets SS-RWCUPMPS – 1 thru 65)

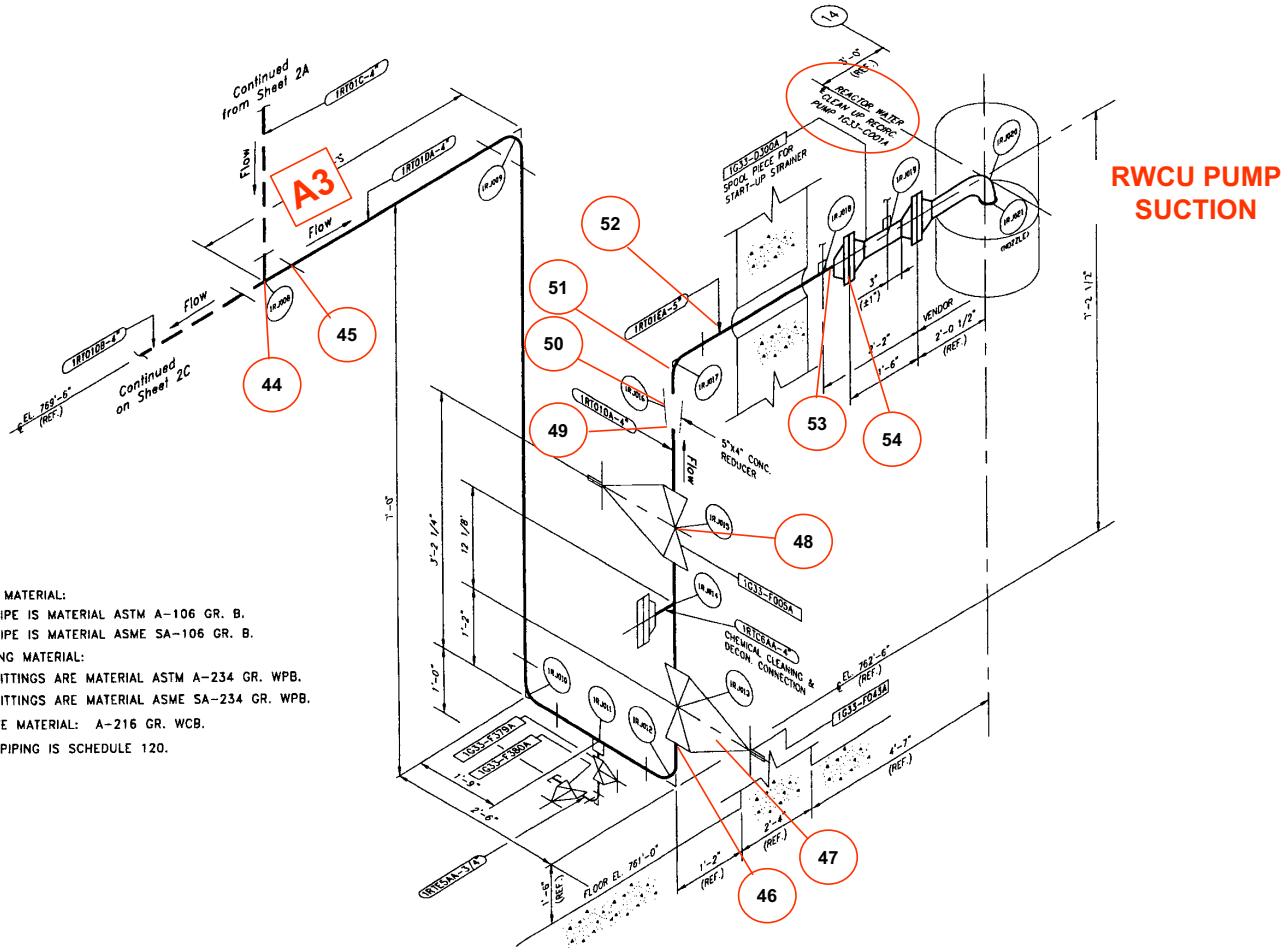


NOTES

1. PIPE MATERIAL:
   4" PIPE IS MATERIAL ASTM A-106 GR. B.
   6" PIPE IS MATERIAL ASME SA-106 GR. B.
2. FITTING MATERIAL:
   4" FITTINGS ARE MATERIAL ASTM A-234 GR. WPB.
   6" FITTINGS ARE MATERIAL ASME SA-234 GR. WPB.
3. VALVE MATERIAL: A-216 GR. WCB.
4. ALL PIPING IS SCHEDULE 120.

# GROUP 25 – REACTOR WATER CLEANUP
# RR PIPING to PUMPS (Sheet 5 of 5)
# (Covers Worksheets SS-RWCUPMPS – 1 thru 65)

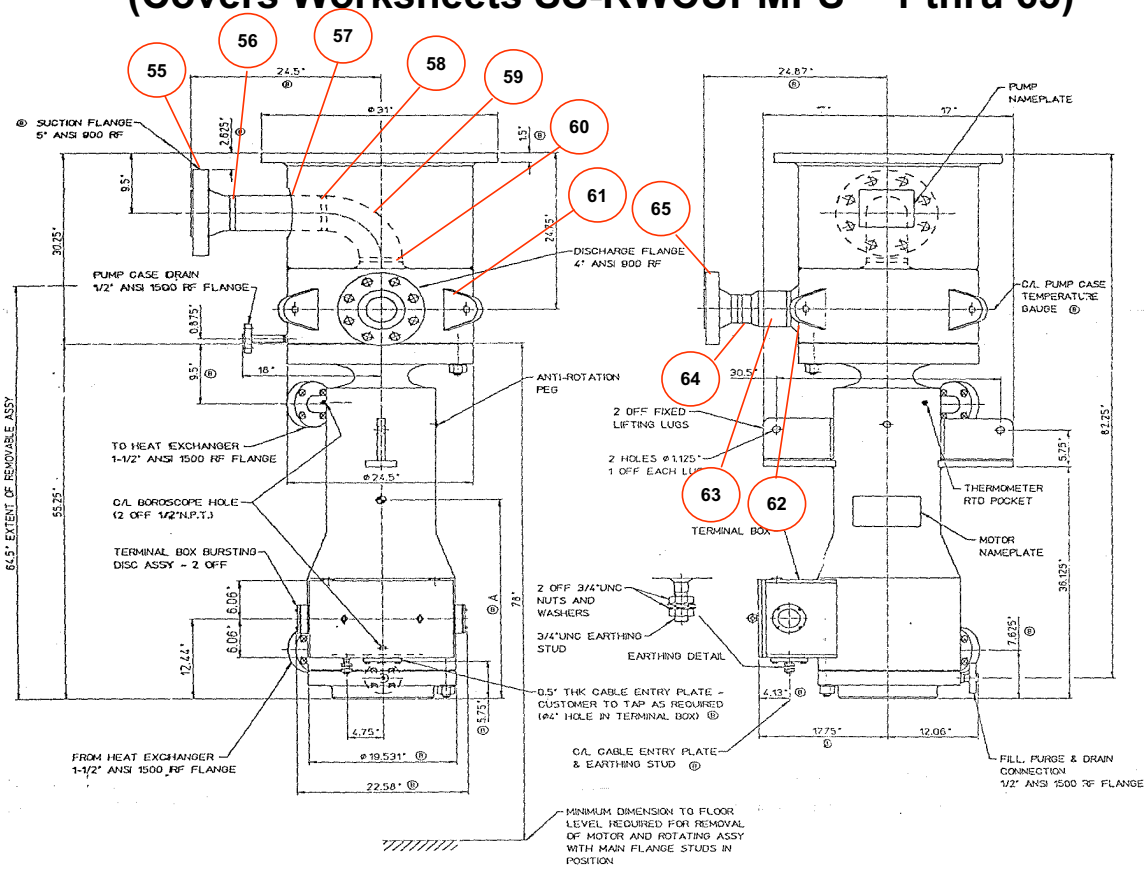


**RWCU PUMP (1G-33-C001A)**

# GROUP 26 – REACTOR WATER CLEANUP
# RWCU PUMP PIPING to NRHX/RHX (Sheet 1 of 7)
# (Covers Worksheets SS-RWCUHX – 1 thru 49)

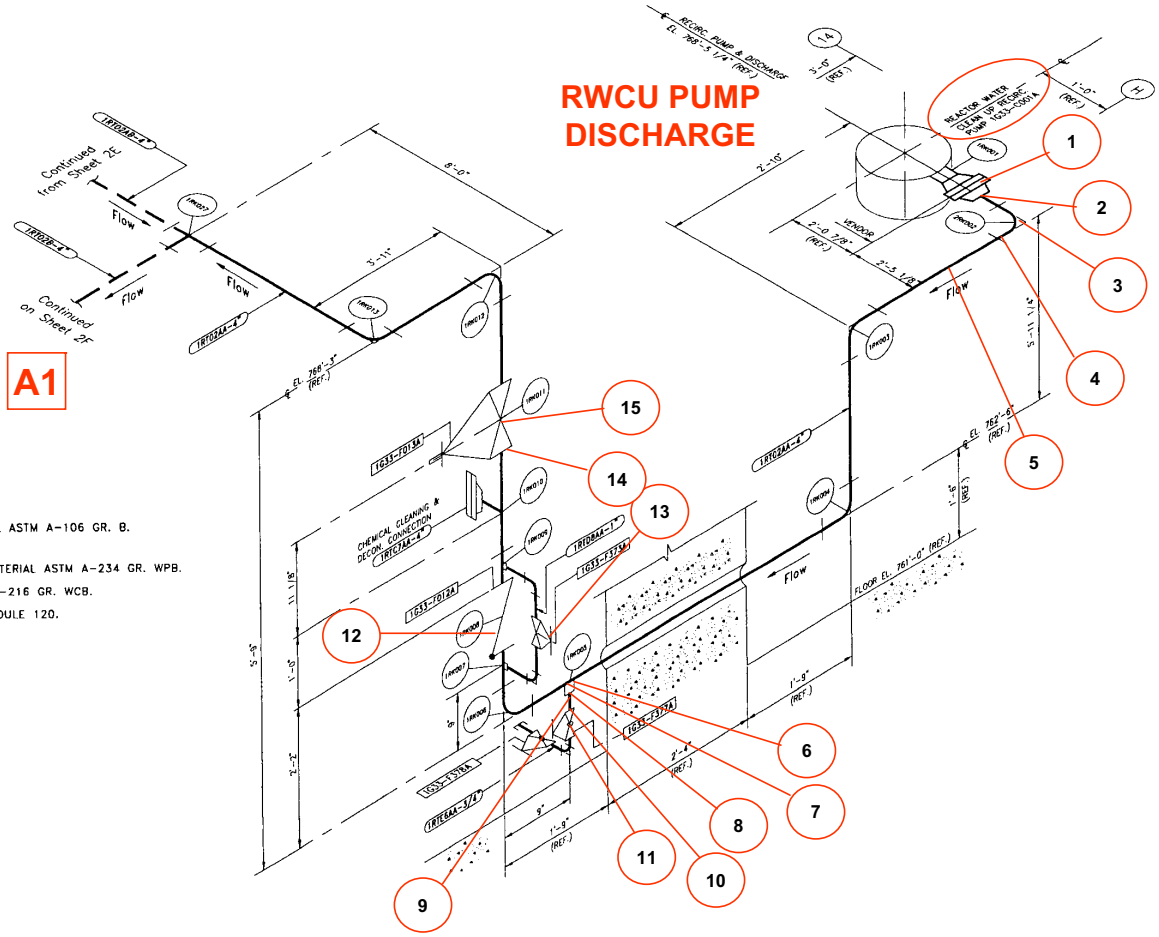


NOTES

1. PIPE MATERIAL:
   4" PIPE IS MATERIAL ASTM A-106 GR. B.
   FITTING MATERIAL:
2. 4" FITTINGS ARE MATERIAL ASTM A-234 GR. WPB.
3. VALVE MATERIAL: A-216 GR. WCB.
4. ALL PIPING IS SCHEDULE 120.

# GROUP 26 – REACTOR WATER CLEANUP
# RWCU PUMP PIPING to NRHX/RHX (Sheet 2 of 7)
# (Covers Worksheets SS-RWCUHX – 1 thru 49)

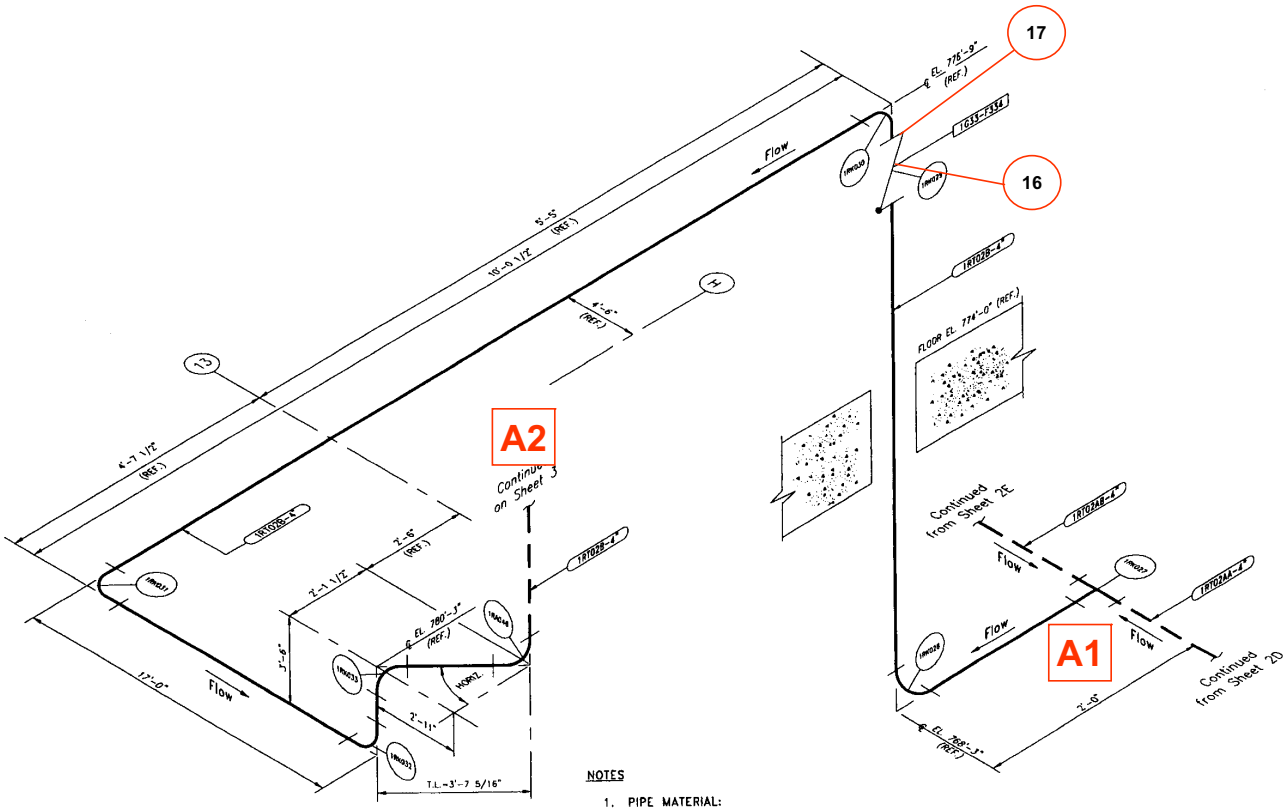


NOTES

1. PIPE MATERIAL:
   4" PIPE IS MATERIAL ASTM A-106 GR. B.
   FITTING MATERIAL:
2. 4" FITTINGS ARE MATERIAL ASTM A-234 GR. WPB.
3. VALVE MATERIAL: A-216 GR. WCB.
4. ALL PIPING IS SCHEDULE 120.

# GROUP 26 – REACTOR WATER CLEANUP
## RWCU PUMP PIPING to NRHX/RHX (Sheet 3 of 7)
## (Covers Worksheets SS-RWCUHX – 1 thru 49)

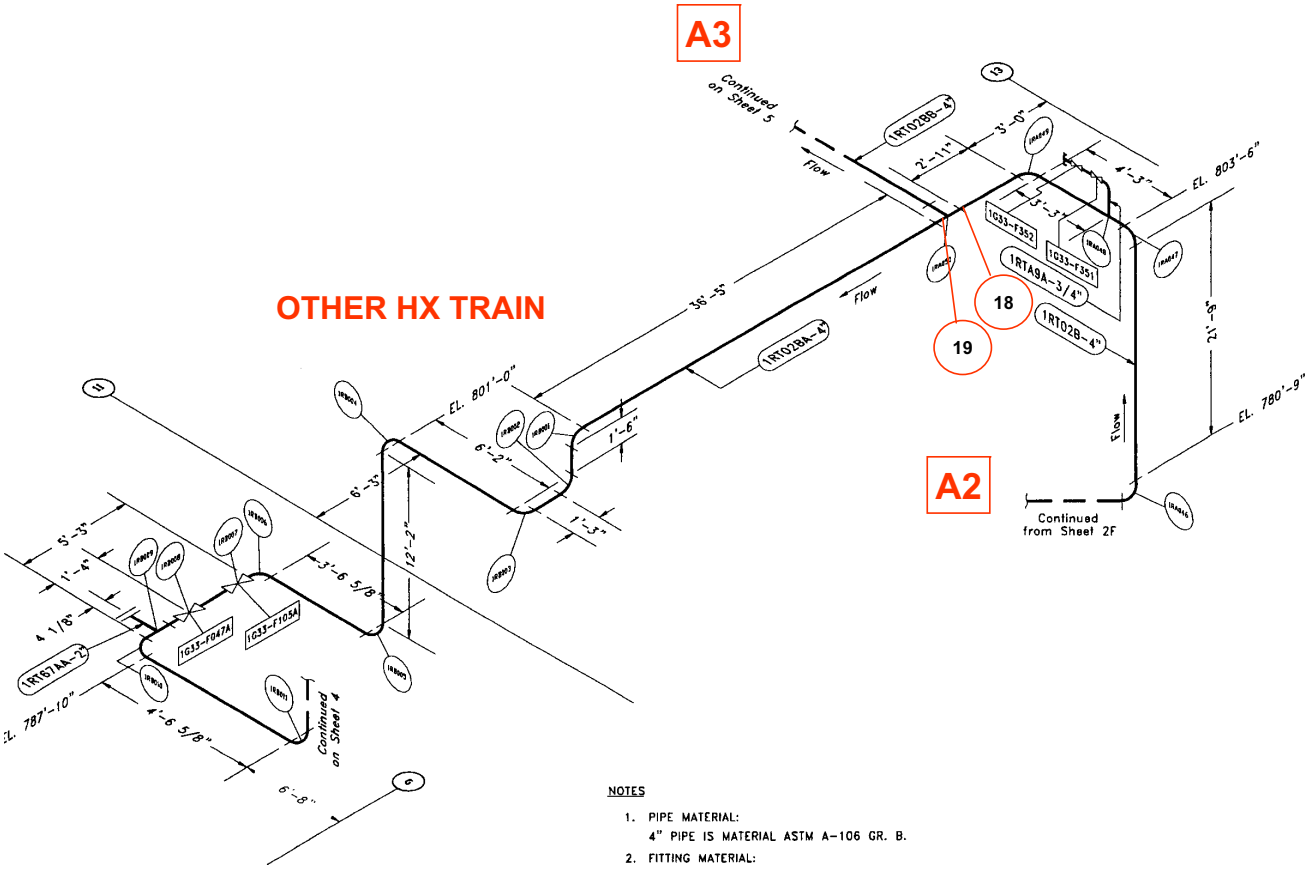


NOTES

1. PIPE MATERIAL:
   4" PIPE IS MATERIAL ASTM A-106 GR. B.
2. FITTING MATERIAL:
   4" FITTINGS ARE MATERIAL ASTM A-234 GR. WPB.
3. VALVE MATERIAL: A-216 GR. WCB.
4. ALL PIPING IS SCHEDULE 120.

# GROUP 26 – REACTOR WATER CLEANUP
# RWCU PUMP PIPING to NRHX/RHX (Sheet 4 of 7)
# (Covers Worksheets SS-RWCUHX – 1 thru 49)

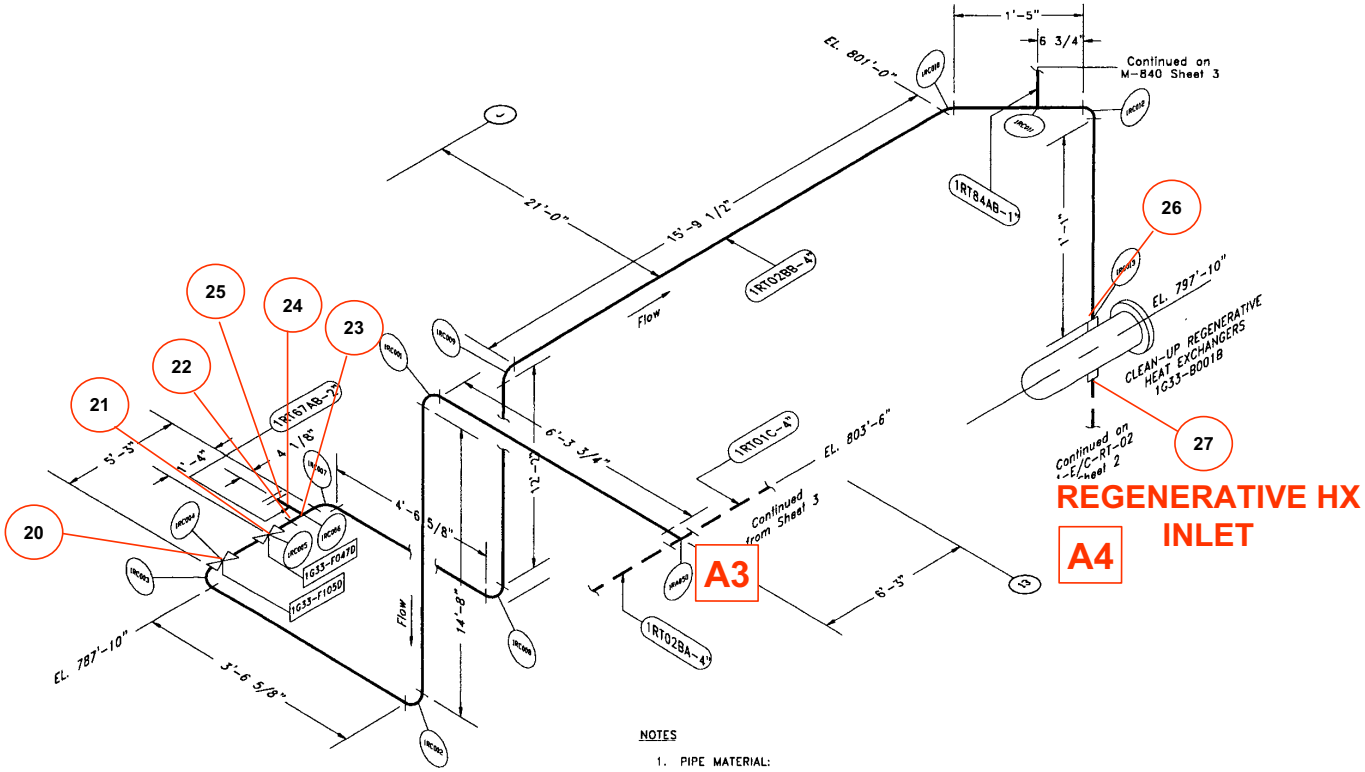


NOTES

1. PIPE MATERIAL:
   4" PIPE IS MATERIAL ASTM A-106 GR. B.
2. FITTING MATERIAL:
   4" FITTINGS ARE MATERIAL ASTM A-234 GR. WPB.
3. VALVE MATERIAL: A-216 GR. WCB.
4. ALL PIPING IS SCHEDULE 120.

# GROUP 26 – REACTOR WATER CLEANUP
# RWCU PUMP PIPING to NRHX/RHX (Sheet 5 of 7)
# (Covers Worksheets SS-RWCUHX – 1 thru 49)

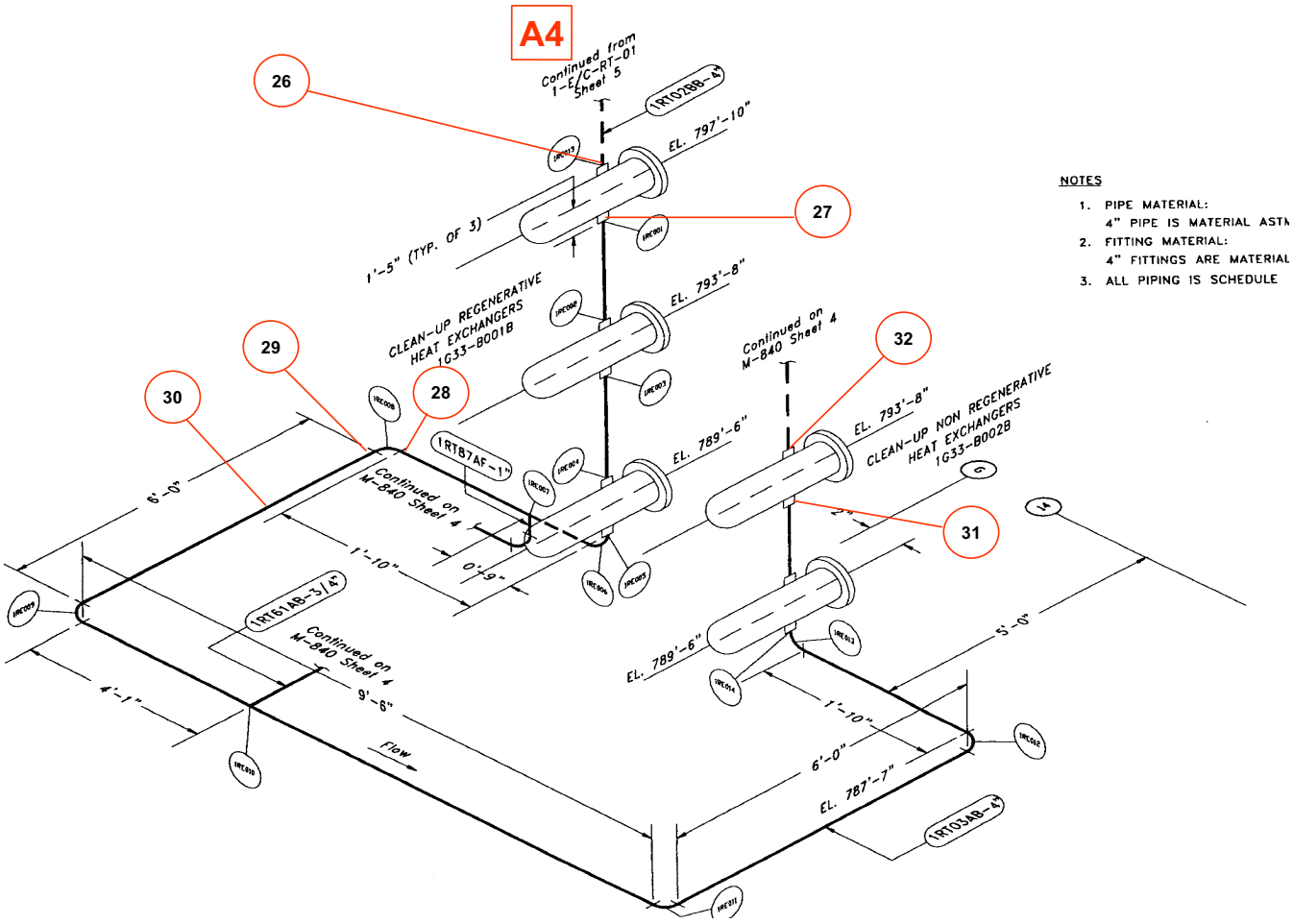

# GROUP 26 – REACTOR WATER CLEANUP
# RWCU PUMP PIPING to NRHX/RHX (Sheet 6 of 7)
# (Covers Worksheets SS-RWCUHX – 1 thru 49)

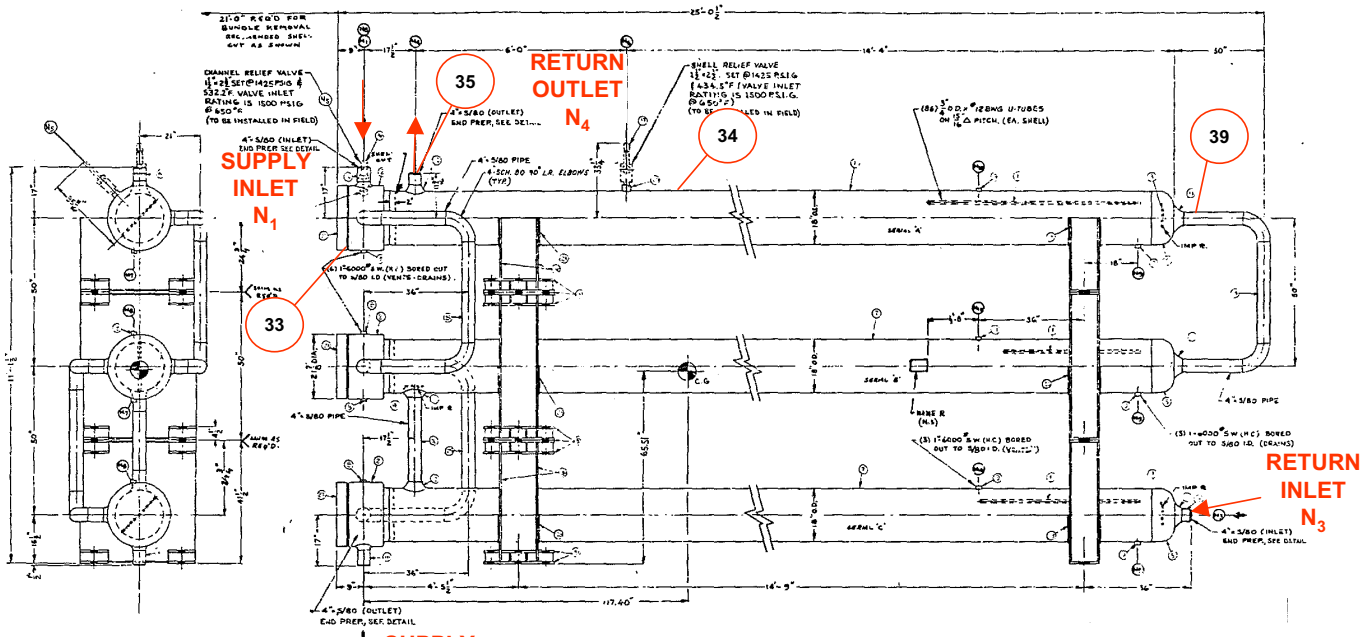


36 TUBESHEETS

37 TUBES

38 BAFFLES

40 FITTINGS

REGENERATIVE HX

# GROUP 26 – REACTOR WATER CLEANUP
# RWCU PUMP PIPING to NRHX/RHX (Sheet 7 of 7)
# (Covers Worksheets SS-RWCUHX – 1 thru 49)

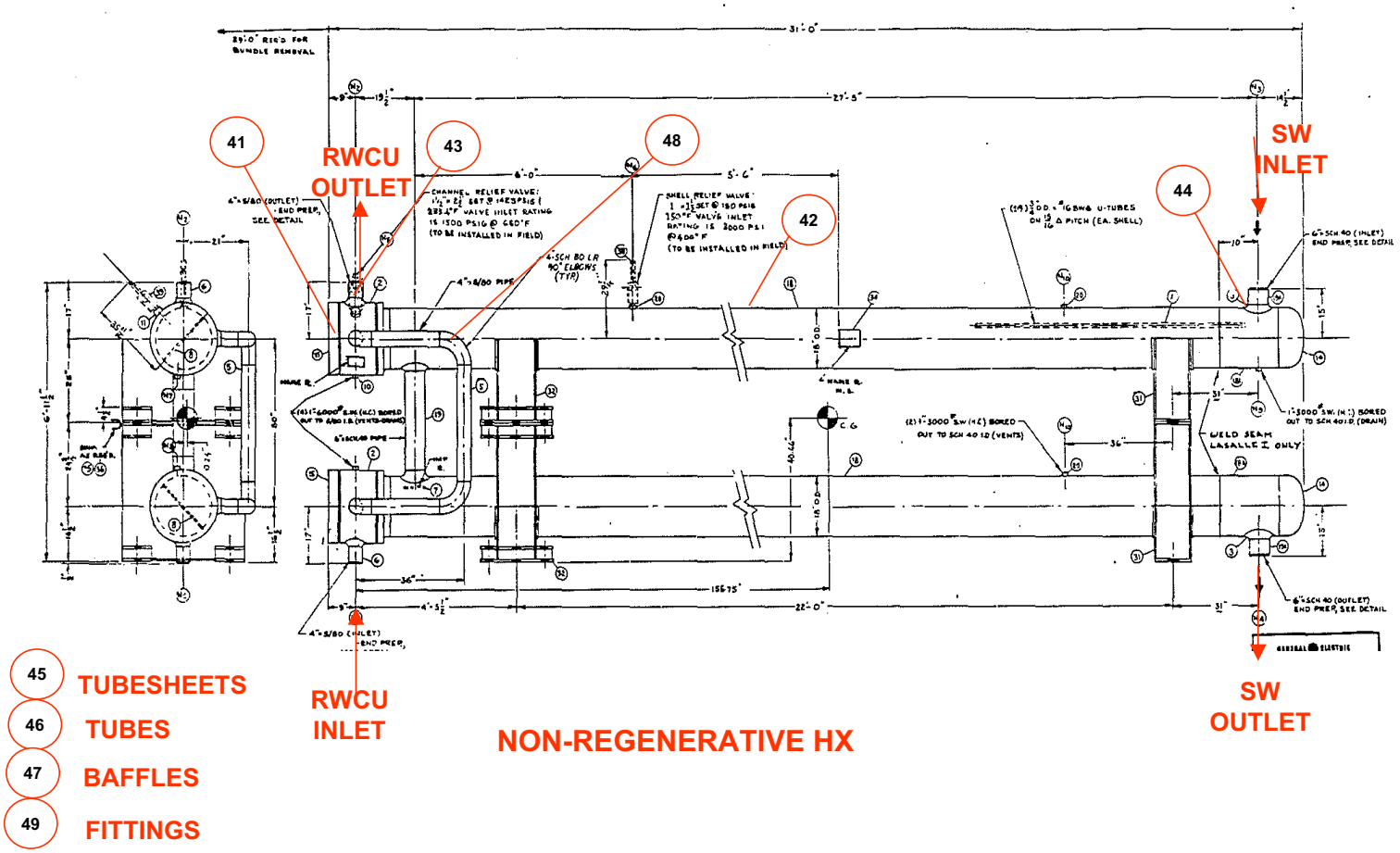

# GROUP 27 – REACTOR WATER CLEANUP
# RWCU PIPING TO FILTERS (Sheet 1 of 2)
# (Covers Worksheets SS-RWCUFLTR – 1 thru 31)

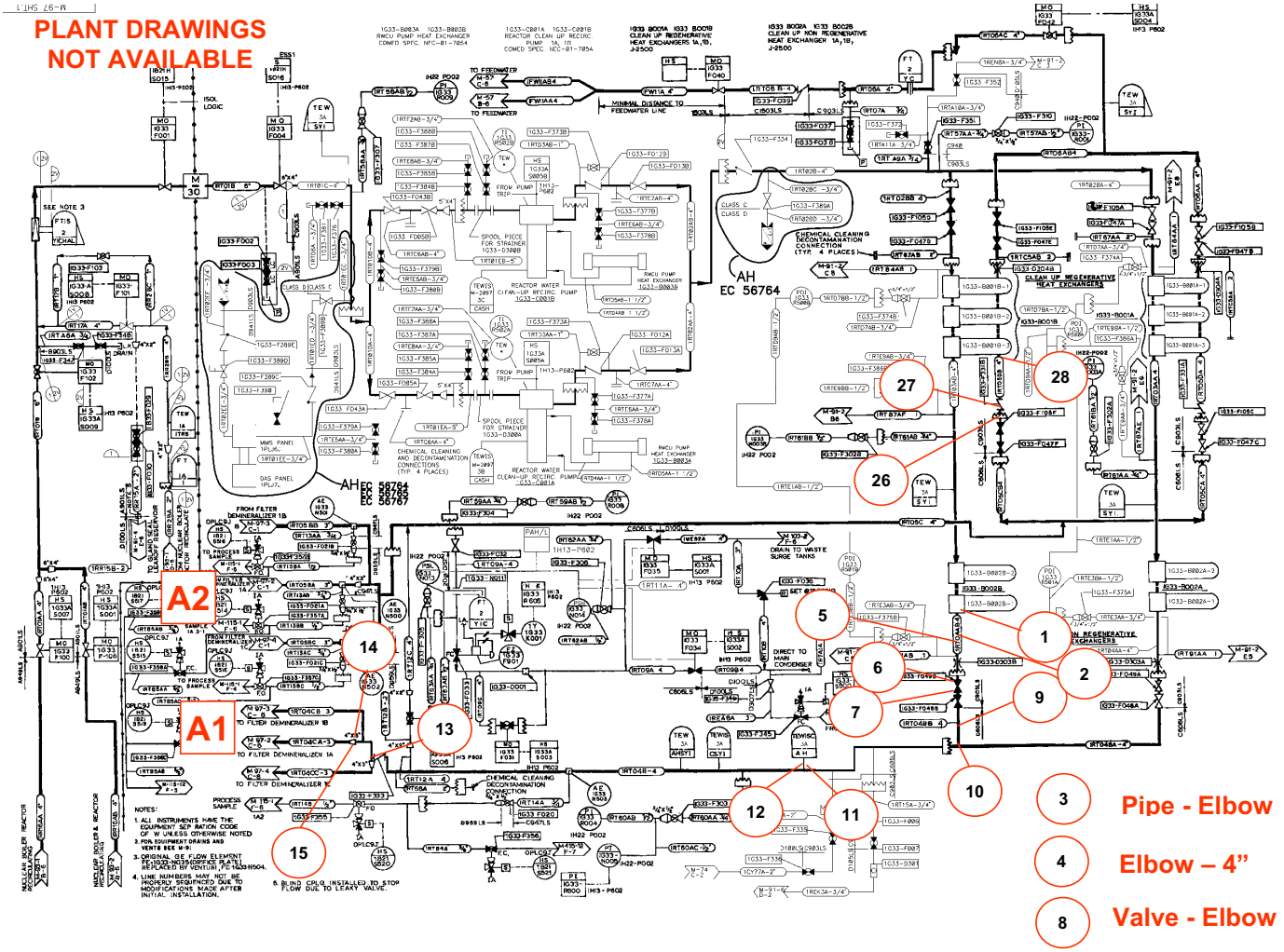

# GROUP 27 – REACTOR WATER CLEANUP
# RWCU PIPING TO FILTERS (Sheet 2 of 2)
# (Covers Worksheets SS-RWCUFLTR – 1 thru 31)

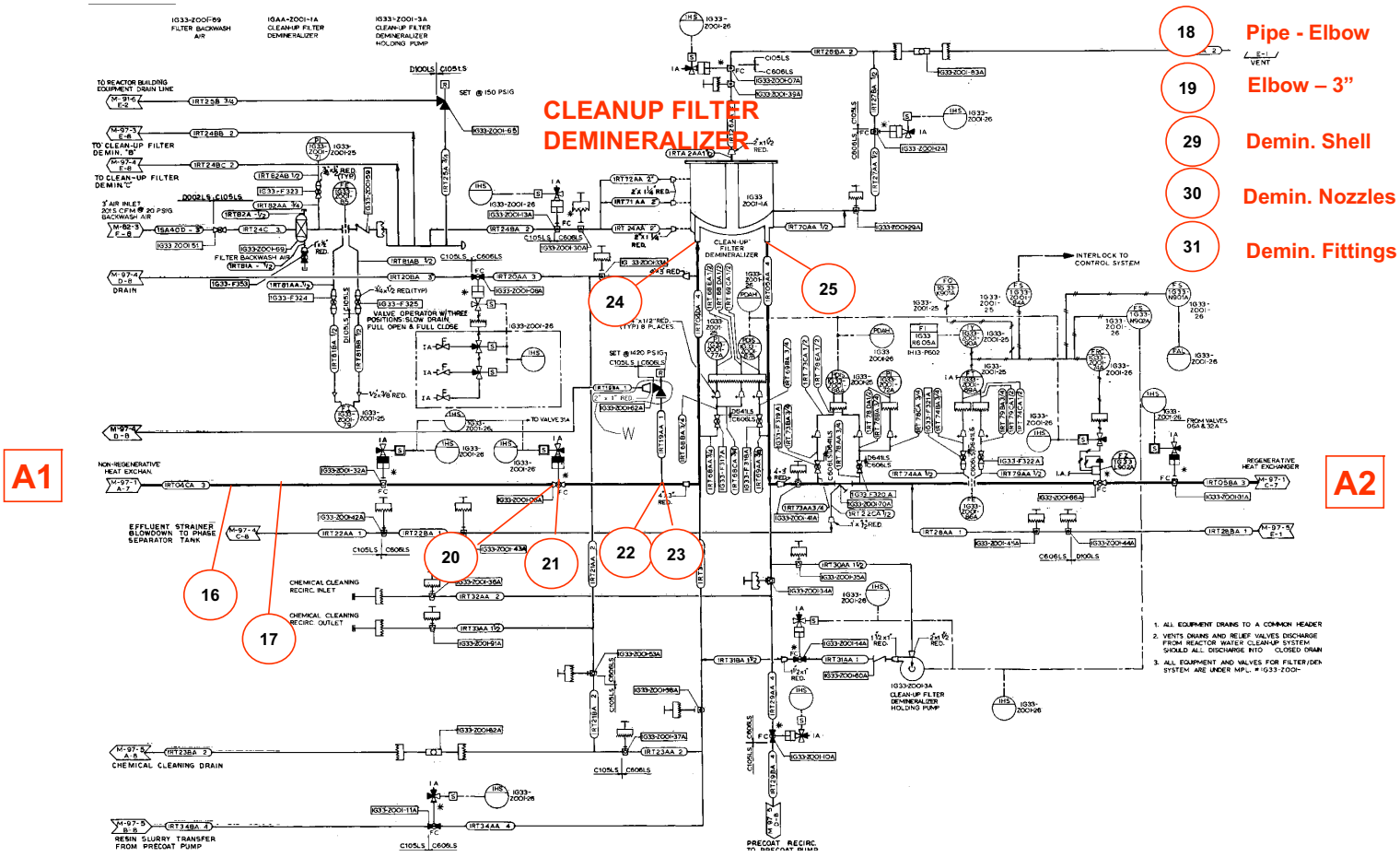

# GROUP 28 – REACTOR WATER CLEANUP
# HX OUTLET PIPING to FEEDWATER (Sheet 1 of 3)
# (Covers Worksheets SS-RWCUFW – 1 thru 26)

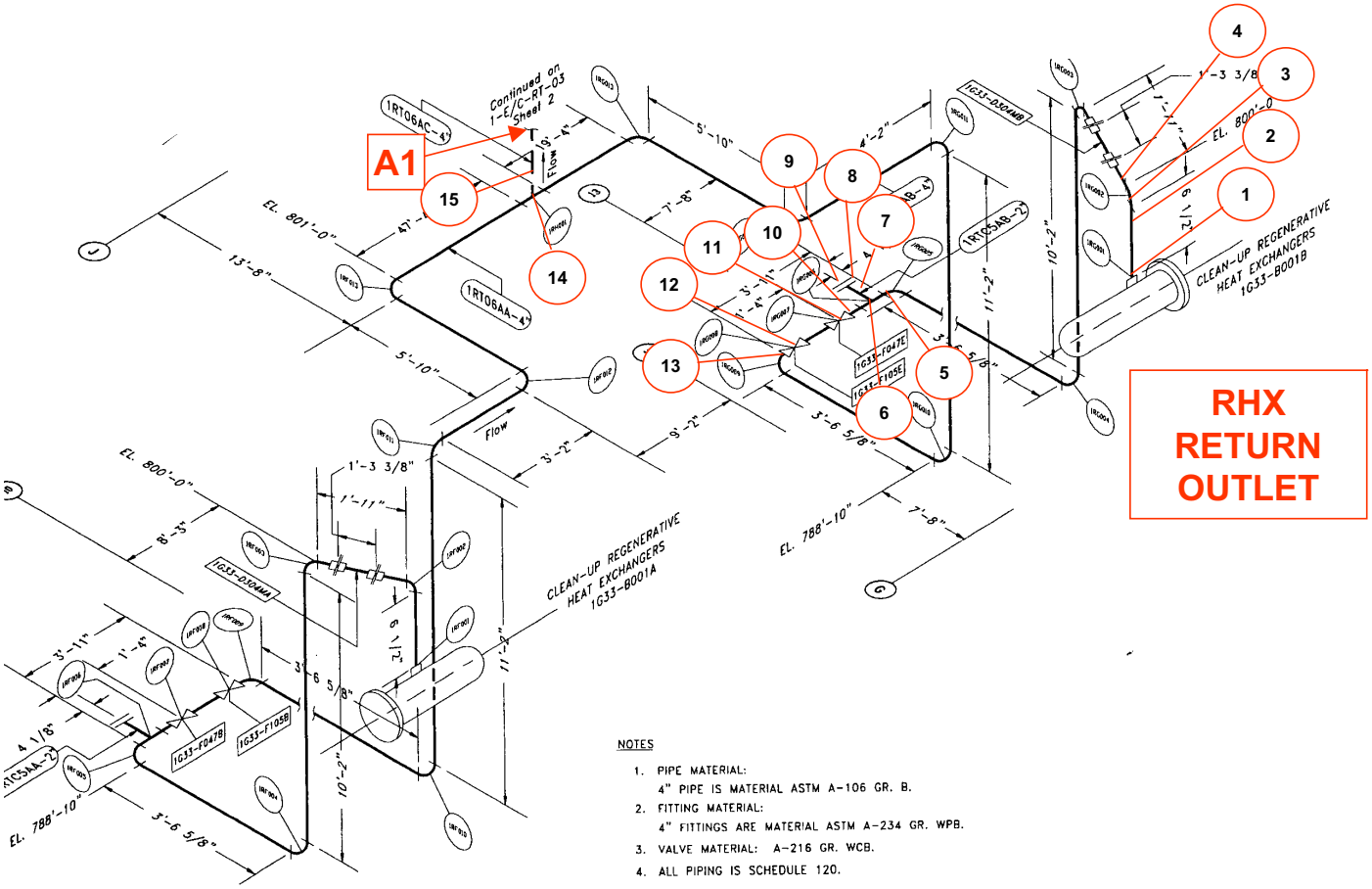


NOTES

1. PIPE MATERIAL:
   4" PIPE IS MATERIAL ASTM A-106 GR. B.
2. FITTING MATERIAL:
   4" FITTINGS ARE MATERIAL ASTM A-234 GR. WPB.
3. VALVE MATERIAL: A-216 GR. WCB.
4. ALL PIPING IS SCHEDULE 120.

# GROUP 28 – REACTOR WATER CLEANUP
# HX OUTLET PIPING to FEEDWATER (Sheet 2 of 3)
# (Covers Worksheets SS-RWCUFW – 1 thru 26)

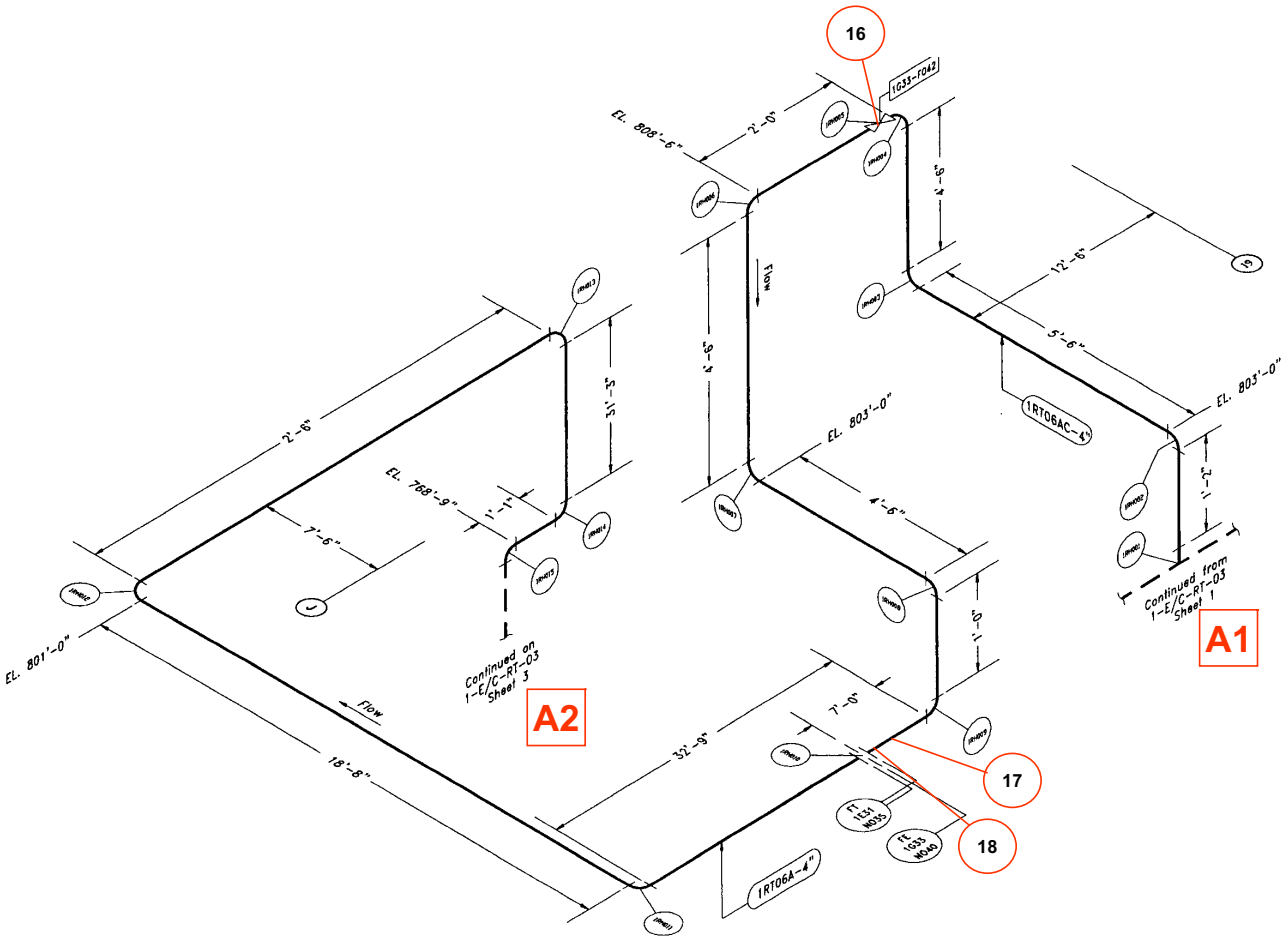
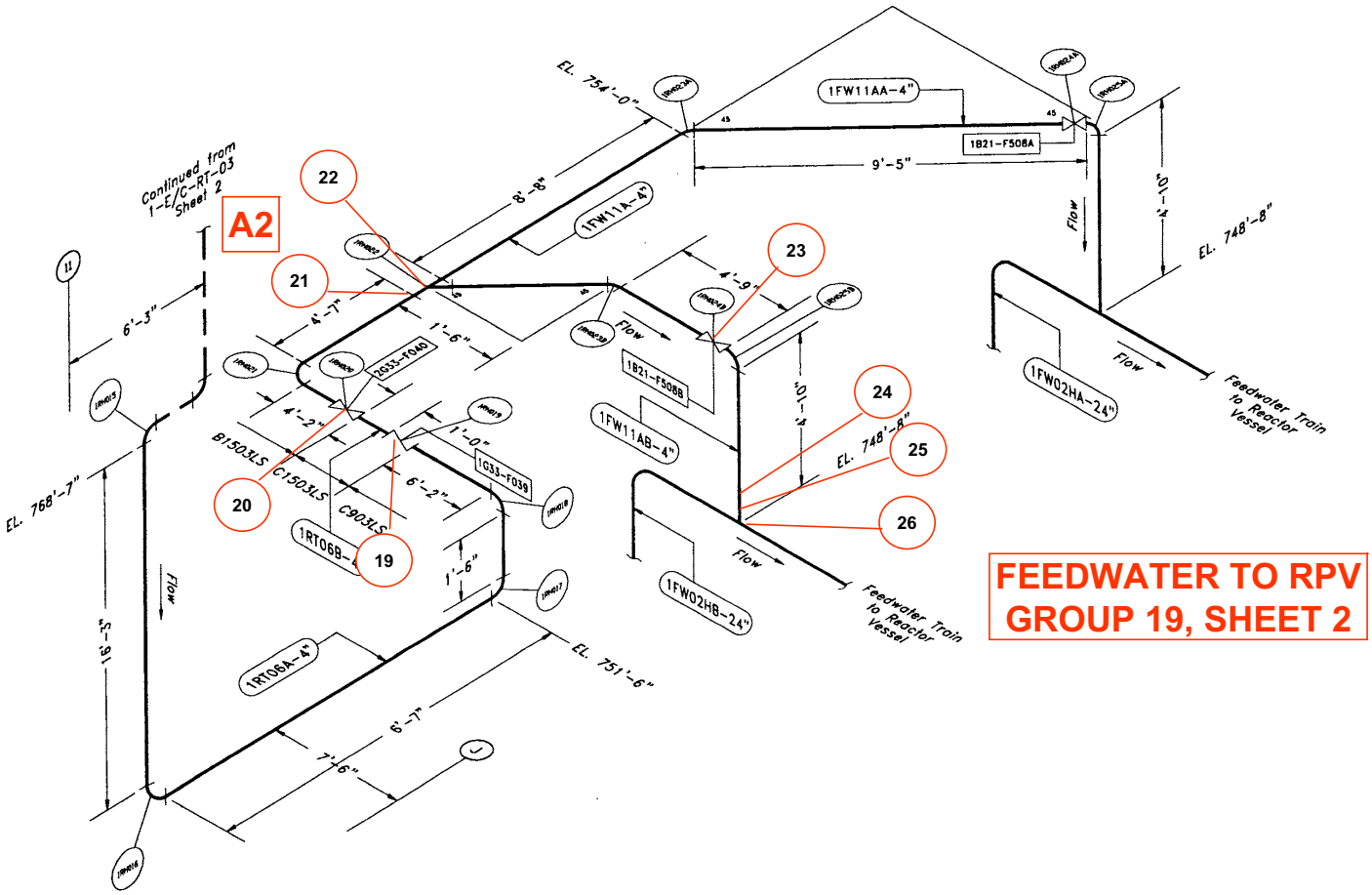
# GROUP 28 – REACTOR WATER CLEANUP
# HX OUTLET PIPING to FEEDWATER (Sheet 3 of 3)
# (Covers Worksheets SS-RWCUFW – 1 thru 26)