REACTOR COOLANT SYSTEM
(Numbers Represent Groups)

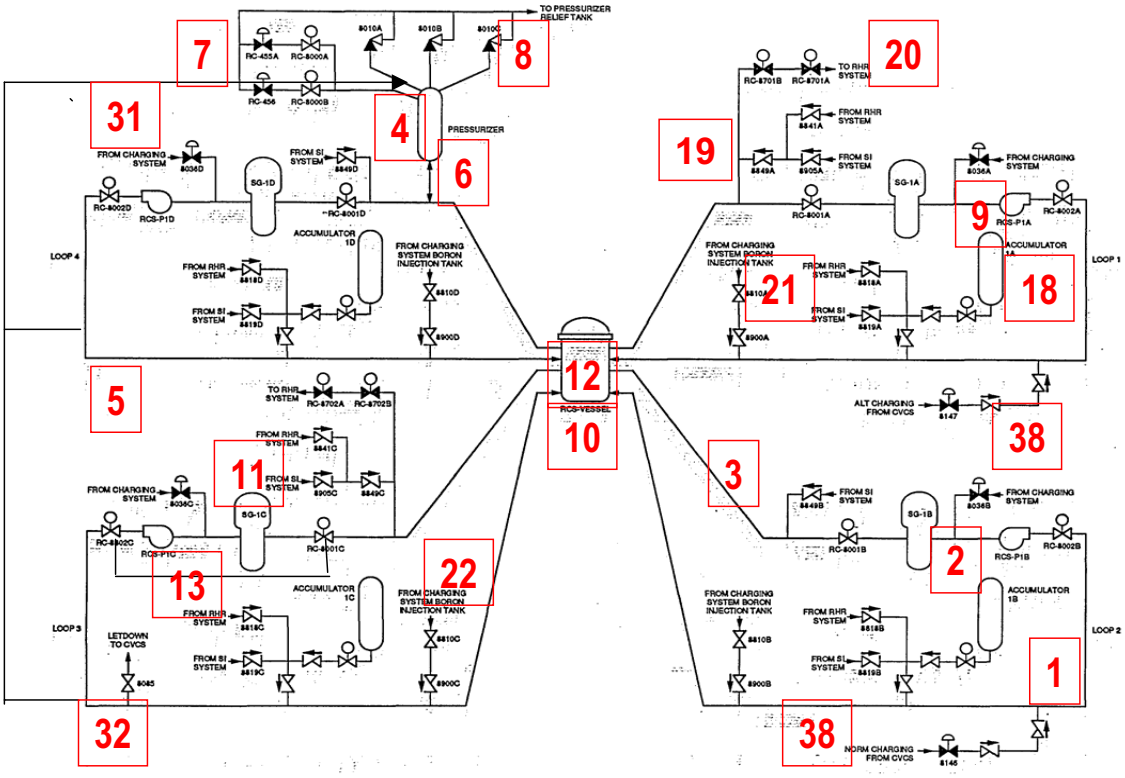

GROUP 1: RCS Cold Leg Piping
(Covers worksheets RCS-CL – 1 thru 28)

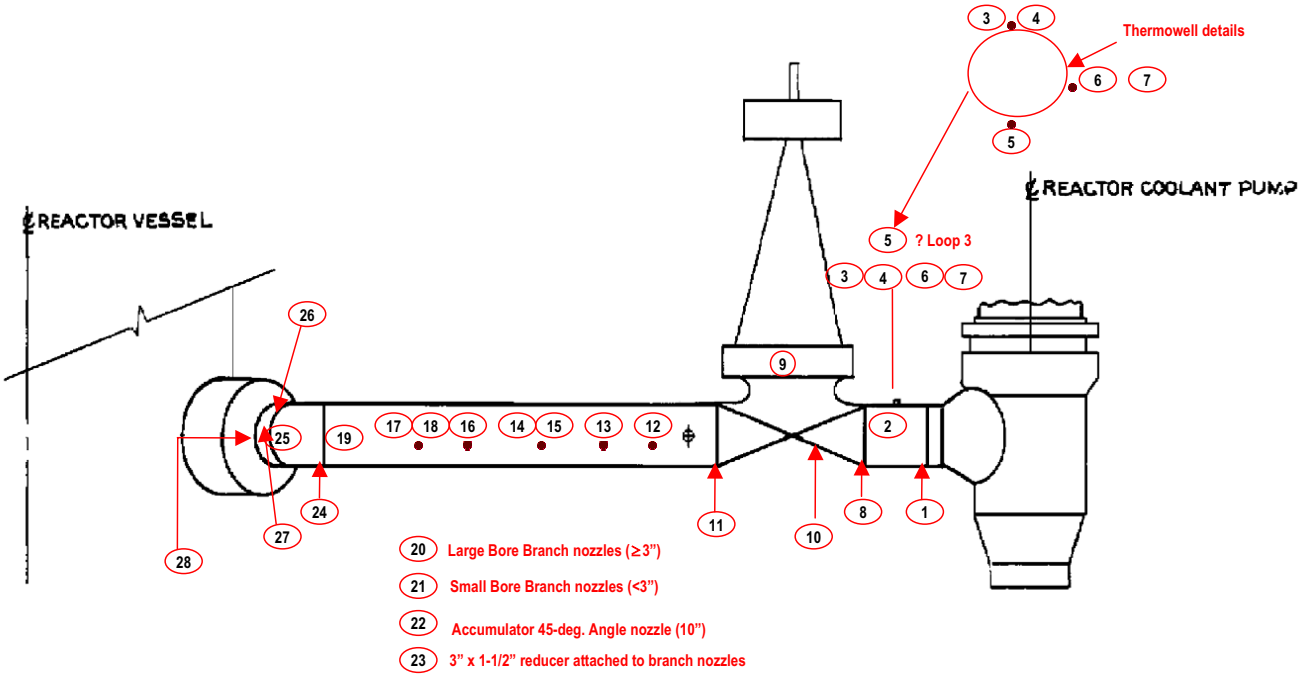

GROUP 2: RCS Crossover Leg Piping
(Covers worksheets RCS-XL – 1 thru 18)

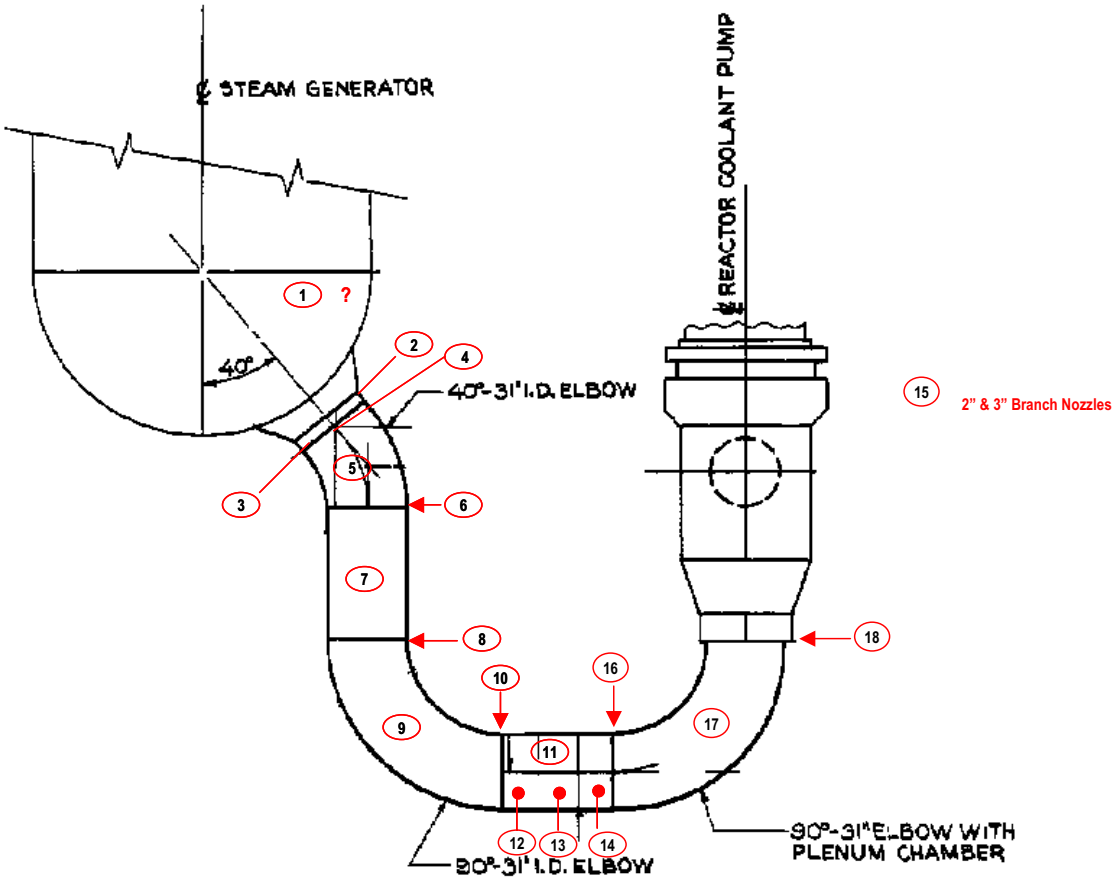

GROUP 3: RCS Hot Leg Piping
(Covers worksheets RCS-HL – 1 thru 22)

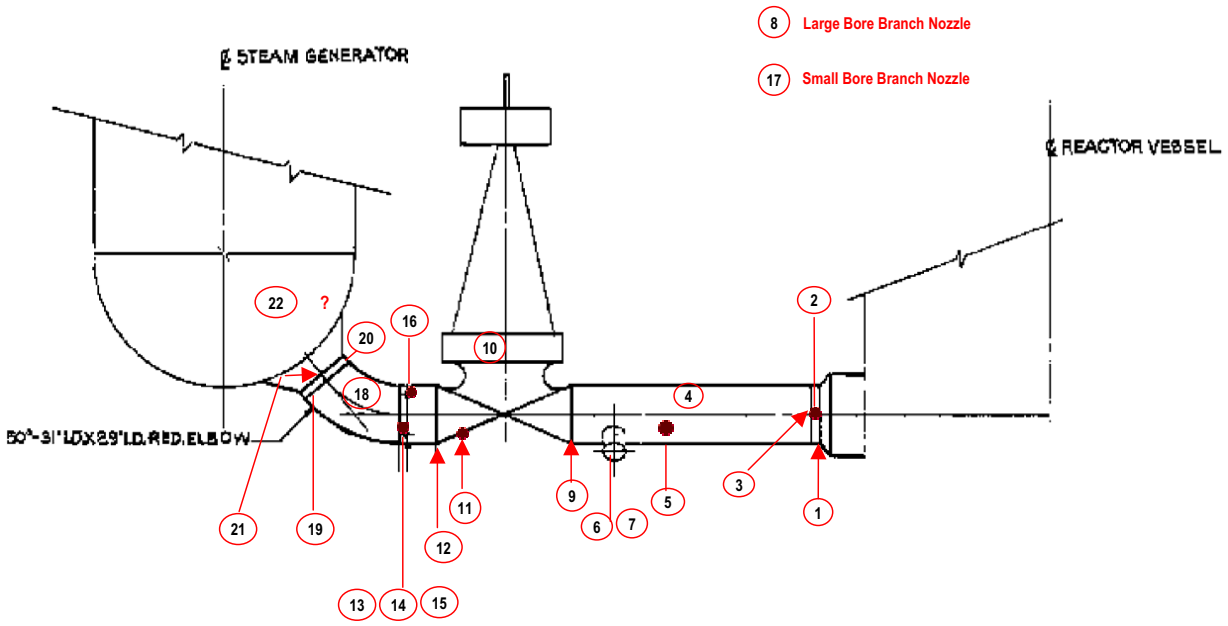

GROUP 4: Pressurizer (Sheet 1 of 2)
(Covers worksheets RCS-PZR – 1 thru 44)

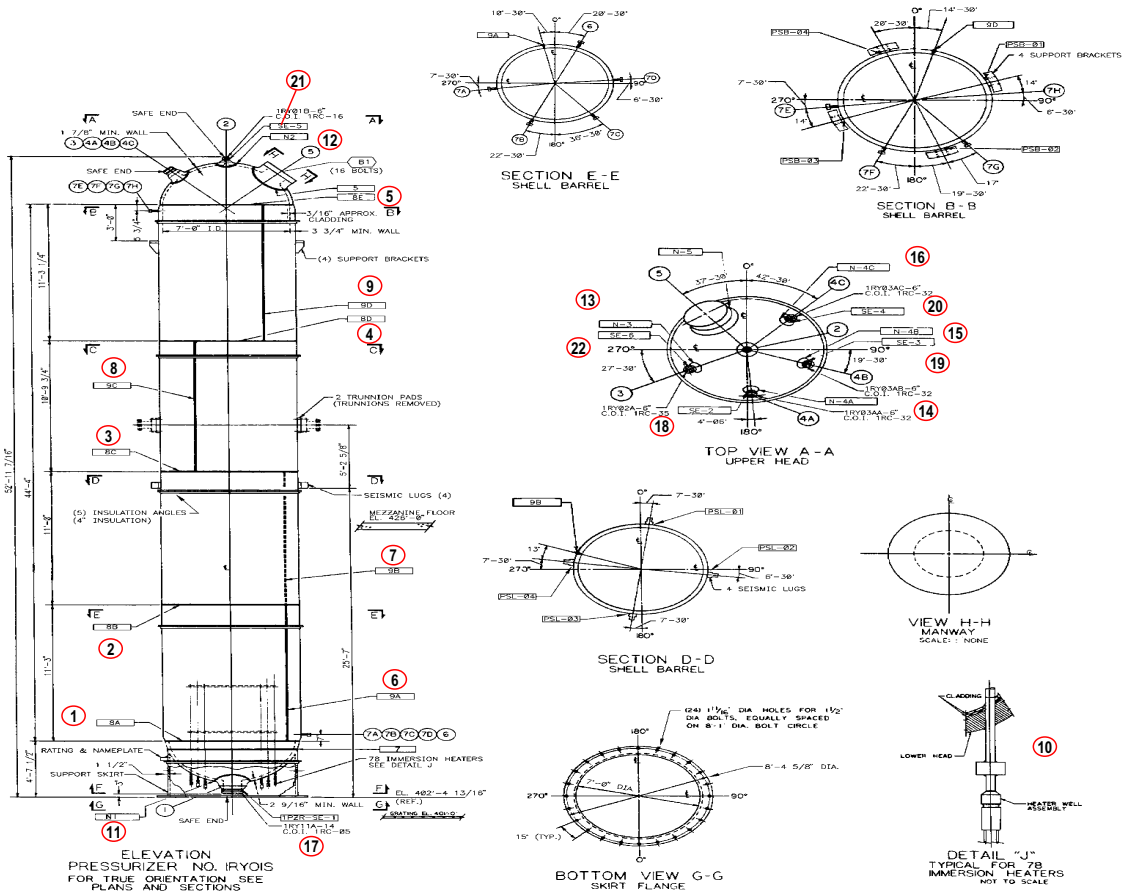

GROUP 4: Pressurizer (Sheet 2 of 2)
(Covers worksheets RCS-PZR – 1 thru 44)

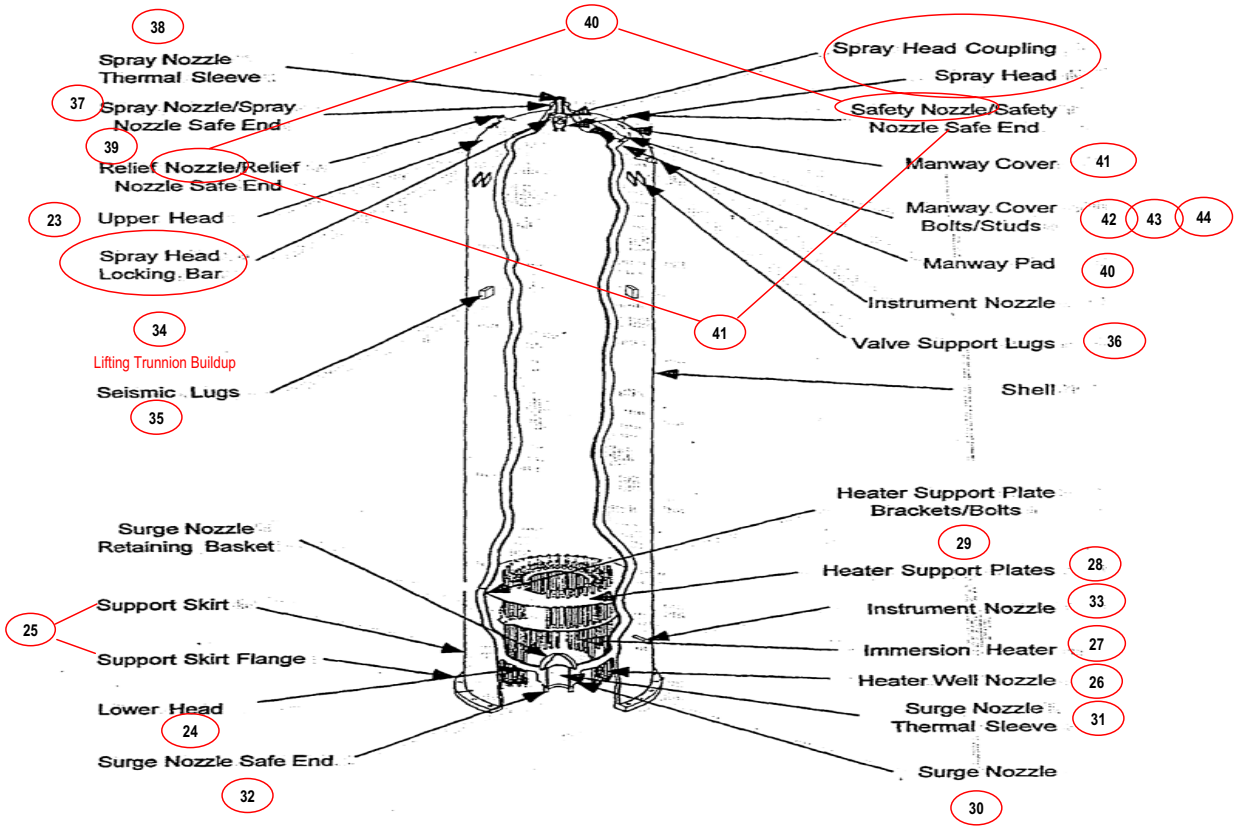

GROUP 5: Pressurizer Spray Line (Sheet 1 of 3)
(Covers worksheets RCS-Spray – 1 thru 36)

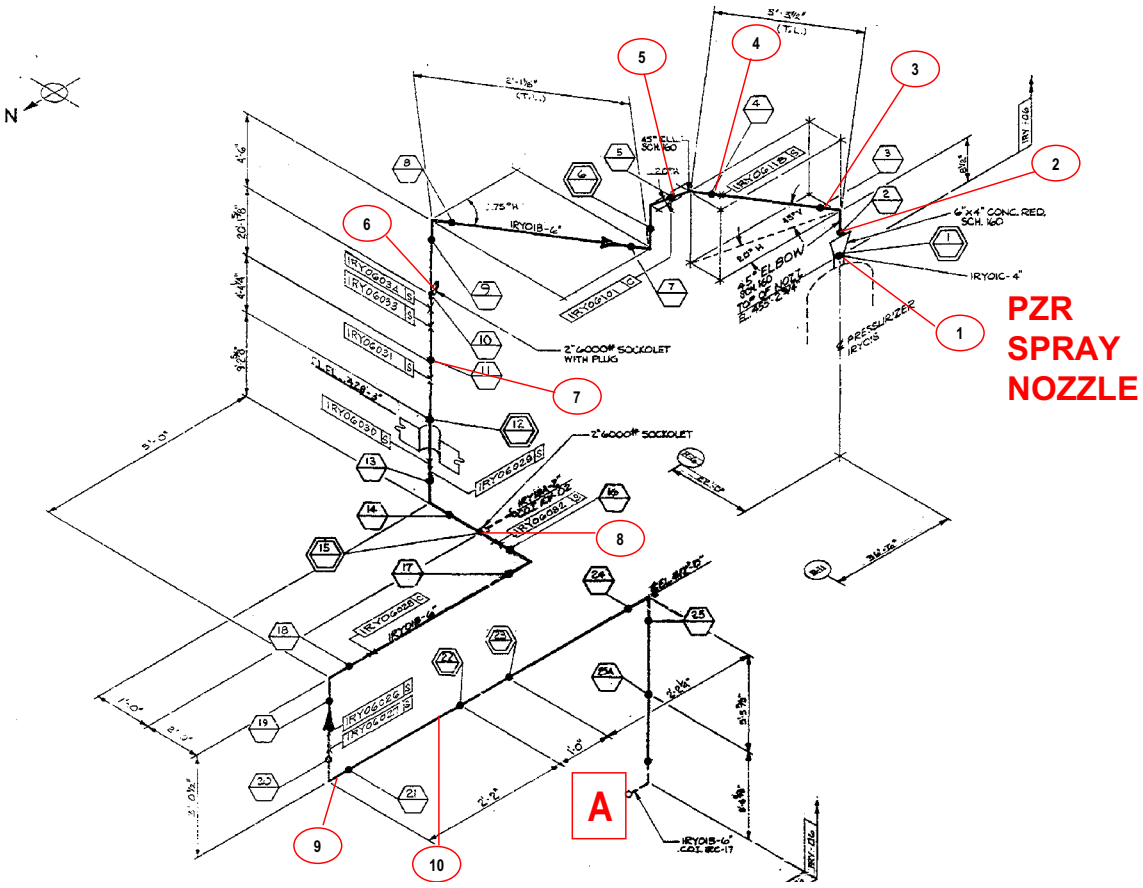

GROUP 5: Pressurizer Spray Line (Sheet 2 of 3)
(Covers worksheets RCS-Spray – 1 thru 36)

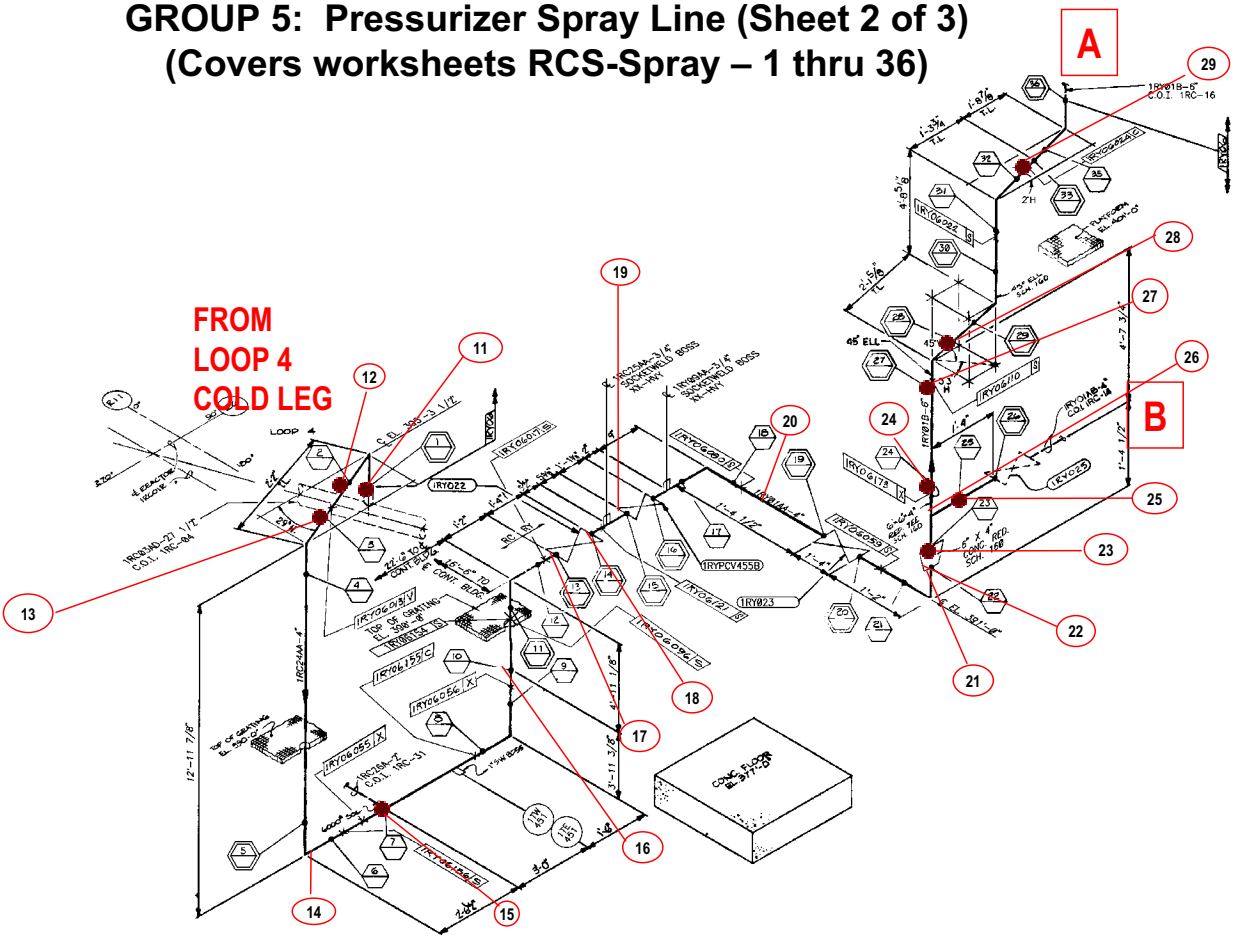

GROUP 5: Pressurizer Spray Line (Sheet 3 of 3)
(Covers worksheets RCS-Spray – 1 thru 36)

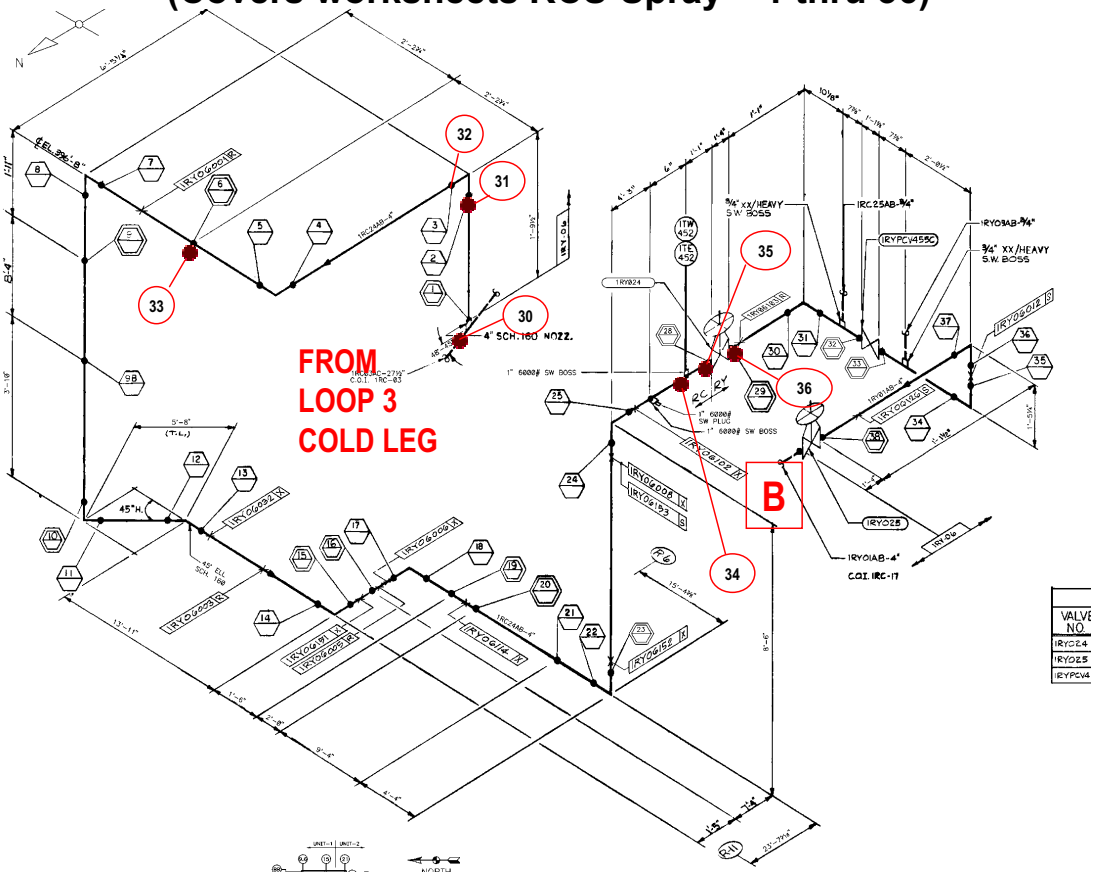

Group 6: Pressurizer Surge Line
(Covers worksheets RCS-Surge – 1 thru 6)

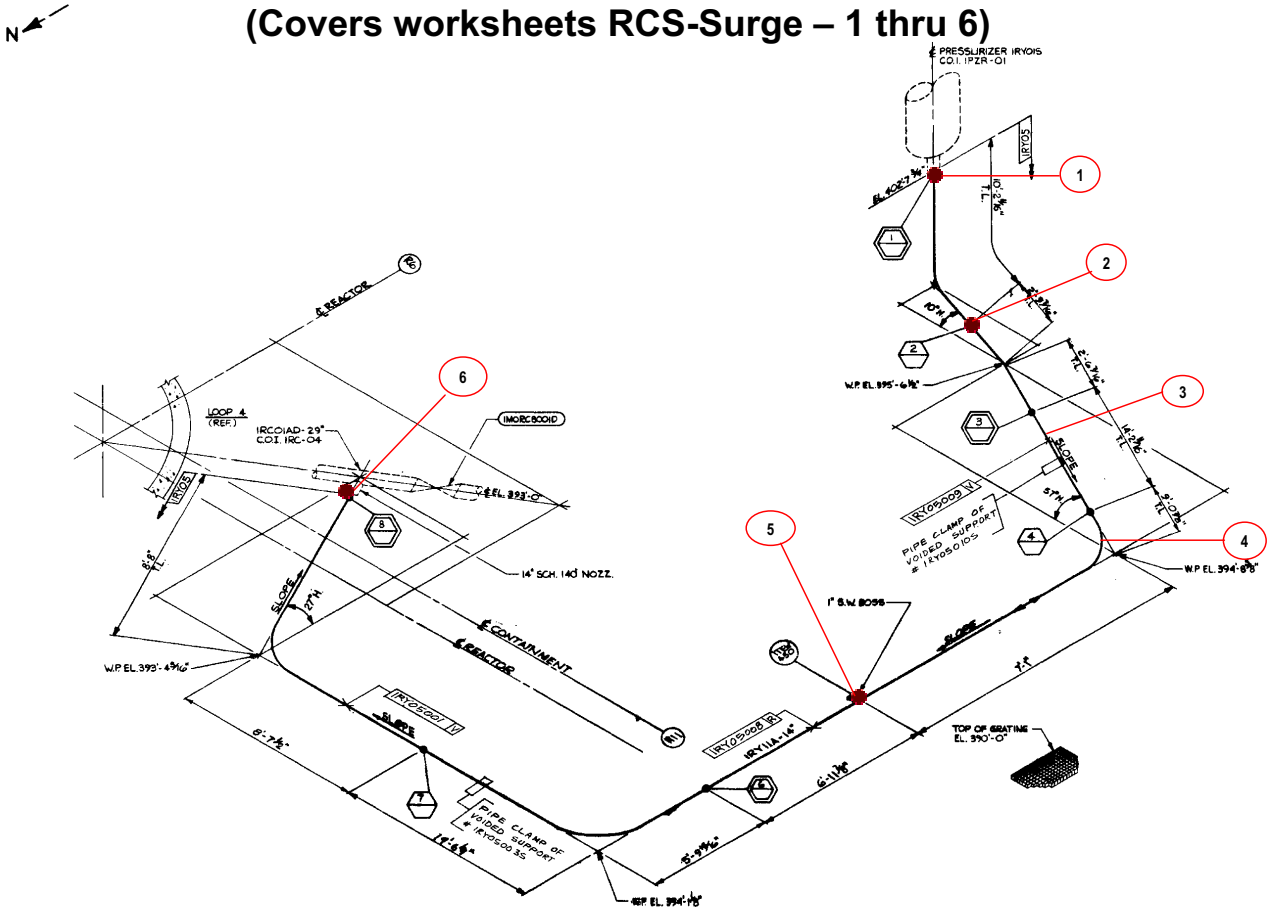

GROUP 7: Pressurizer to PORVs
(Covers worksheets RCS-PORV – 1 thru 21)

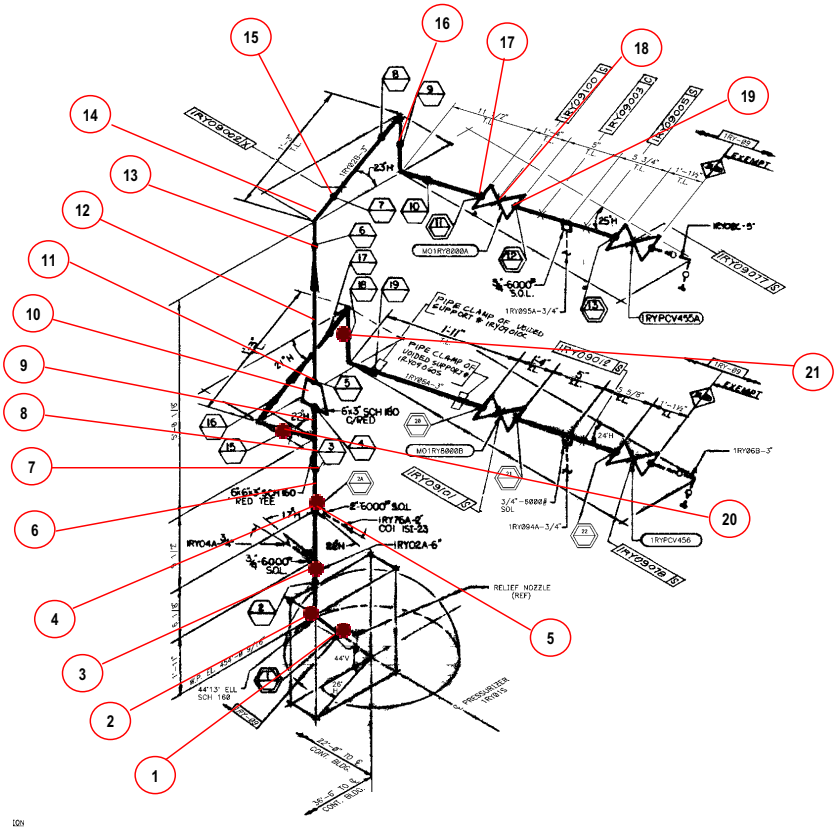

GROUP 8: Pressurizer to SRVs
(Covers worksheets RCS-SRV – 1 thru 9)

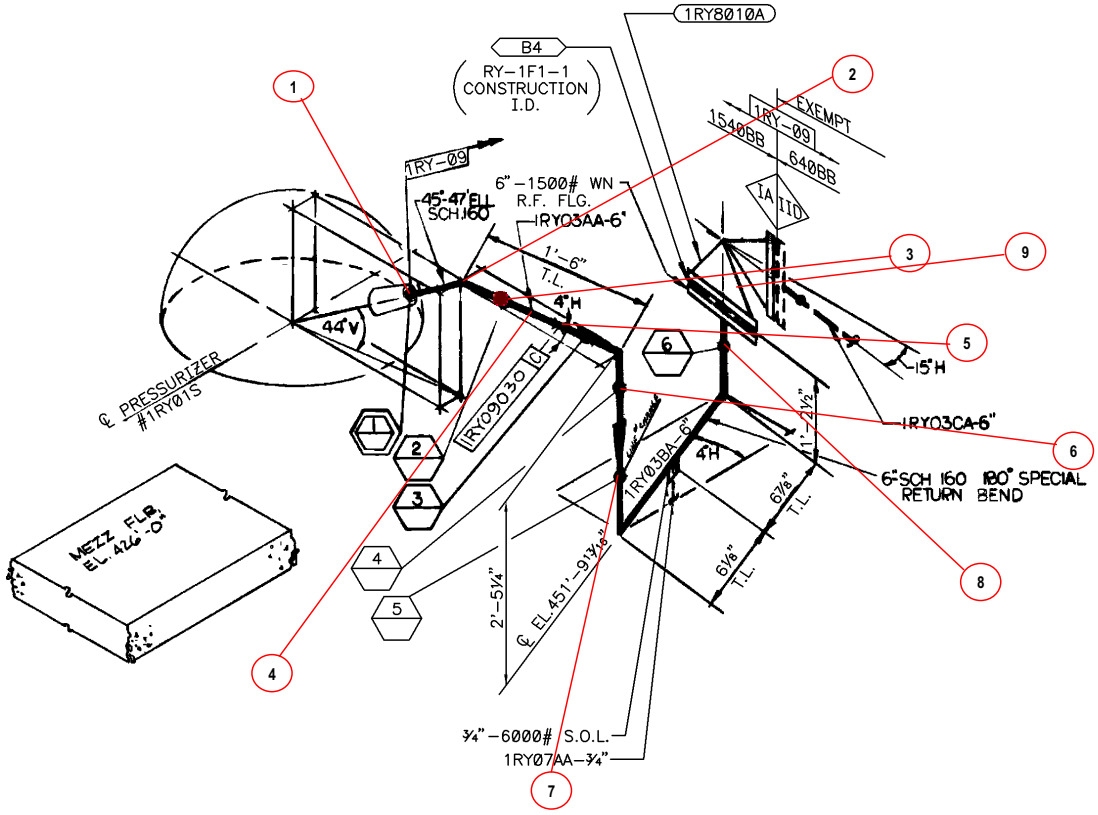

GROUP 9: Reactor Coolant Pump
(Covers worksheets RCS-RCP – 1 thru 5)

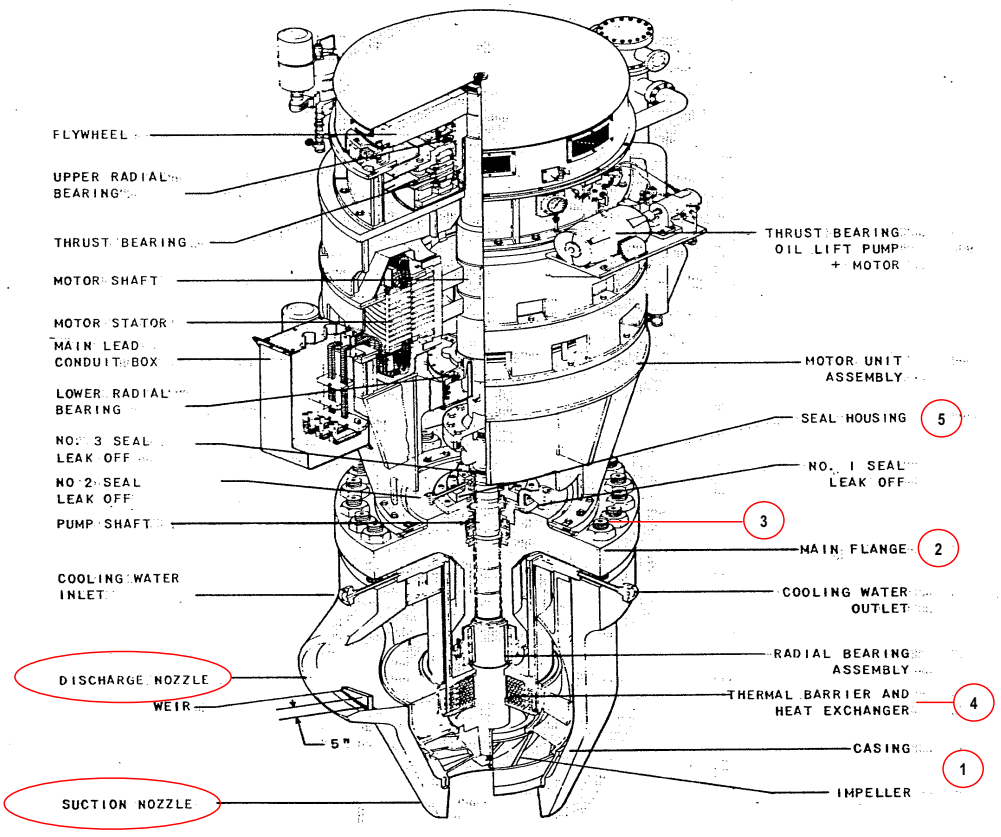

GROUP 10: Reactor Pressure Vessel (Sheet 1 of 4)
(Covers worksheets RCS-RPV – 1 thru 31)

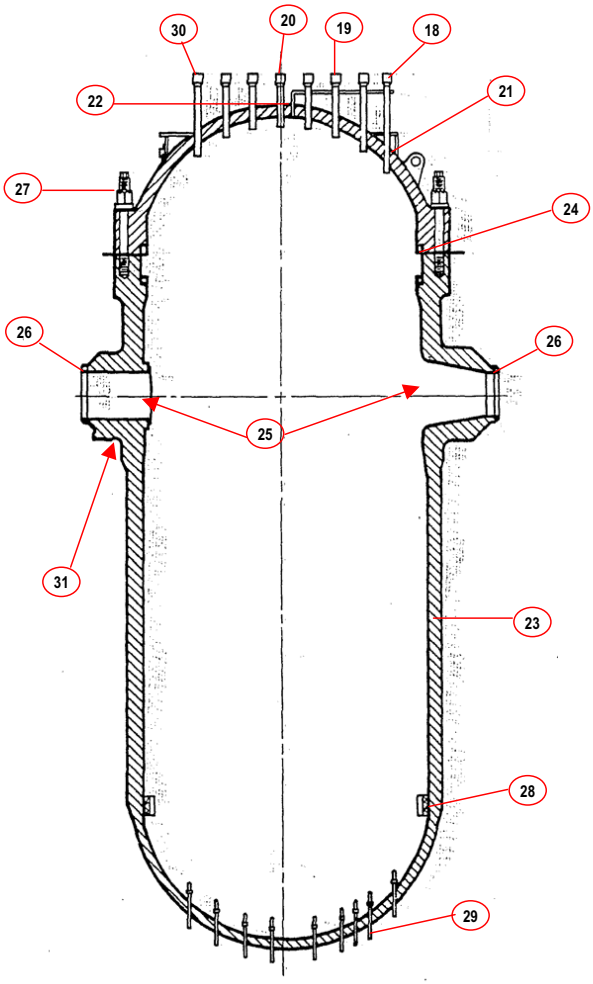

GROUP 10: Reactor Pressure Vessel (Sheet 2 of 4)
(Covers worksheets RCS-RPV – 1 thru 31)

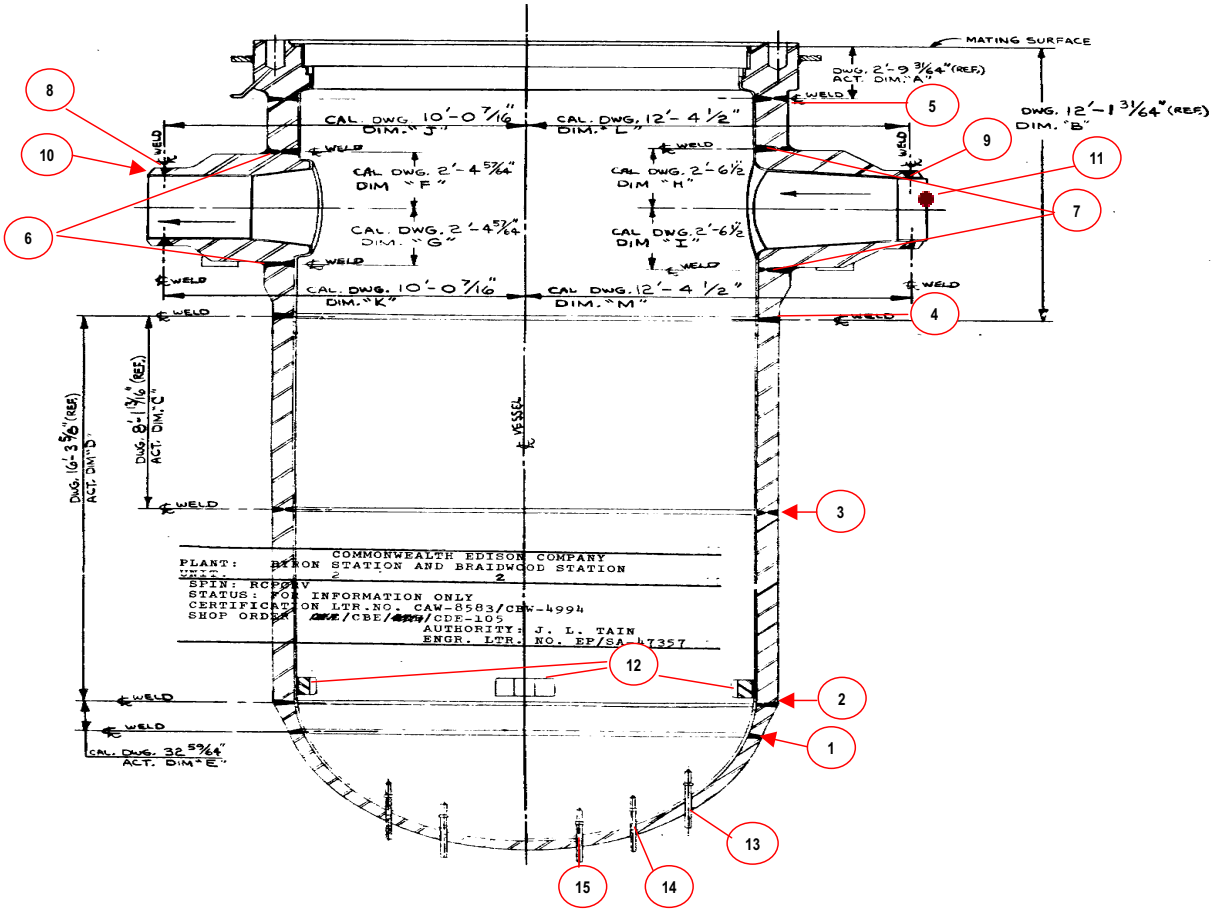

GROUP 10: Reactor Pressure Vessel (Sheet 3 of 4)
(Covers worksheets RCS-RPV – 1 thru 31)

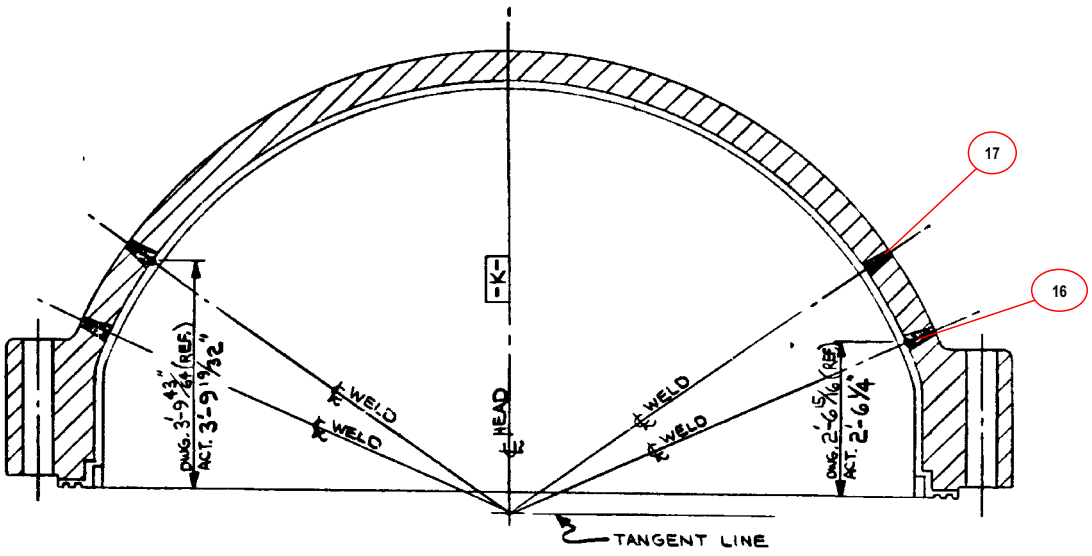

GROUP 10: Reactor Pressure Vessel (Sheet 4 of 4)
(Covers worksheets RCS-RPV – 1 thru 31)

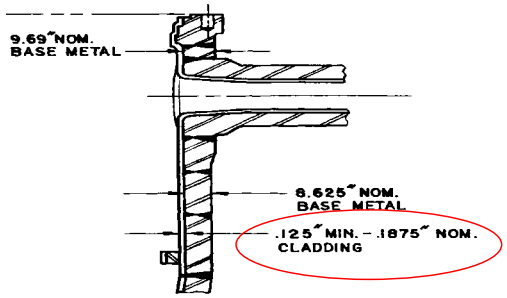

TYP. NOZZLE SECTION

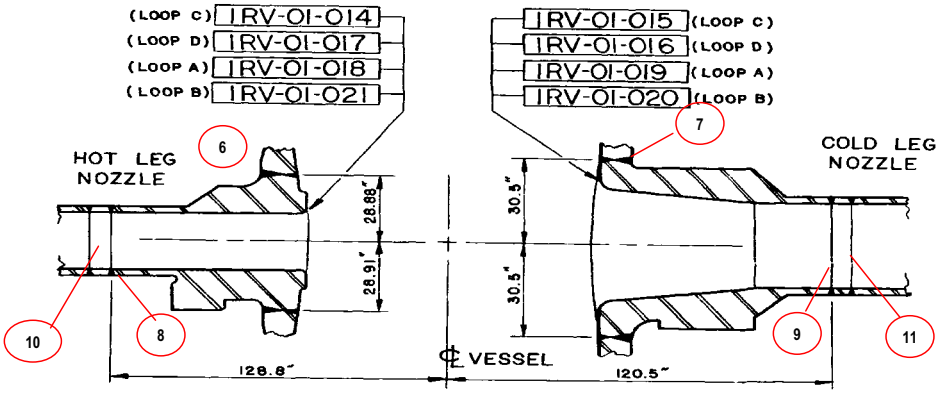

TYP. DETAIL OF
HOT LEG / COLD LEG NOZZLES

GROUP 11: Steam Generator
(Covers worksheets RCS-SG – 1 thru 71)

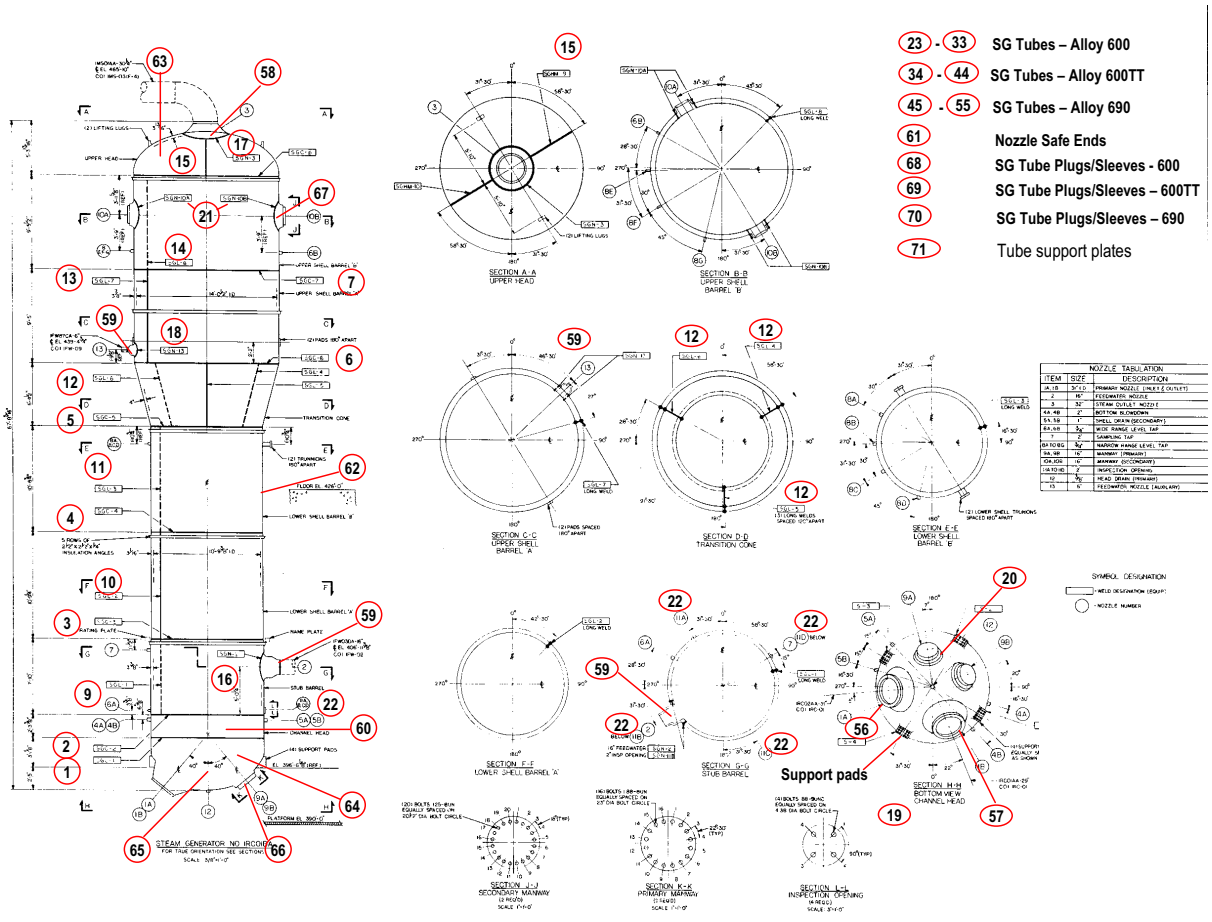

GROUP 12: Reactor Vessel Internals
(Covers Worksheets RCS-RVI – 1 thru 25)

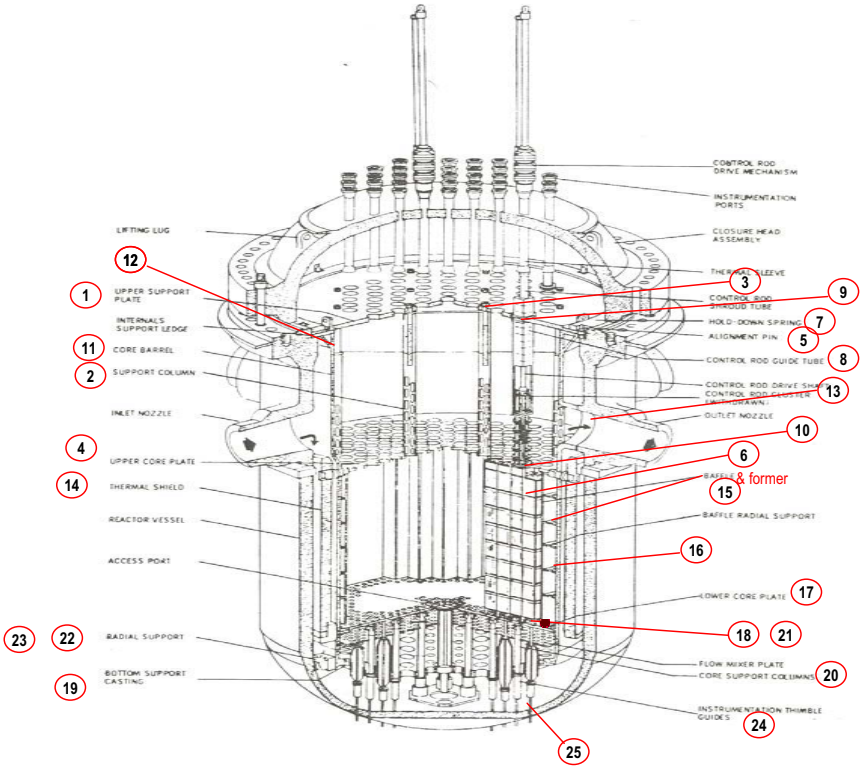

GROUP 13: RCS Stop Valve Loop Bypass Line (Sheet 1 of 3)
(Covers Worksheets RCS-LPBYP – 1 thru 38)

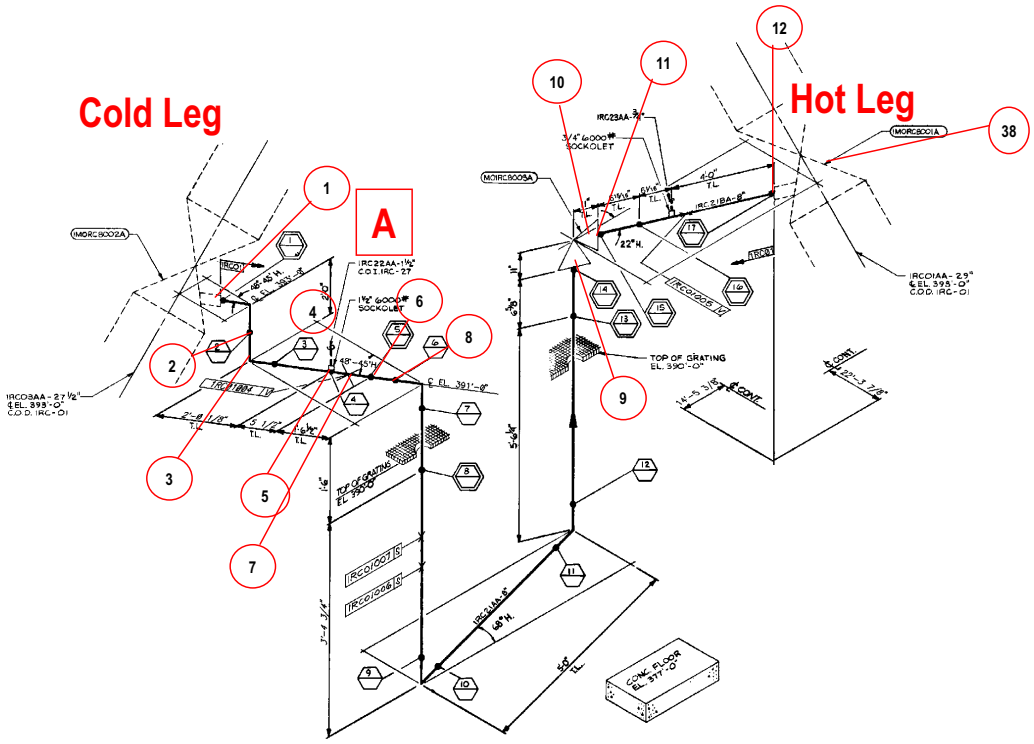

GROUP 13: RCS Stop Valve Loop Bypass Line (Sheet 2 of 3)
(Covers Worksheets RCS-LPBYP – 1 thru 38)

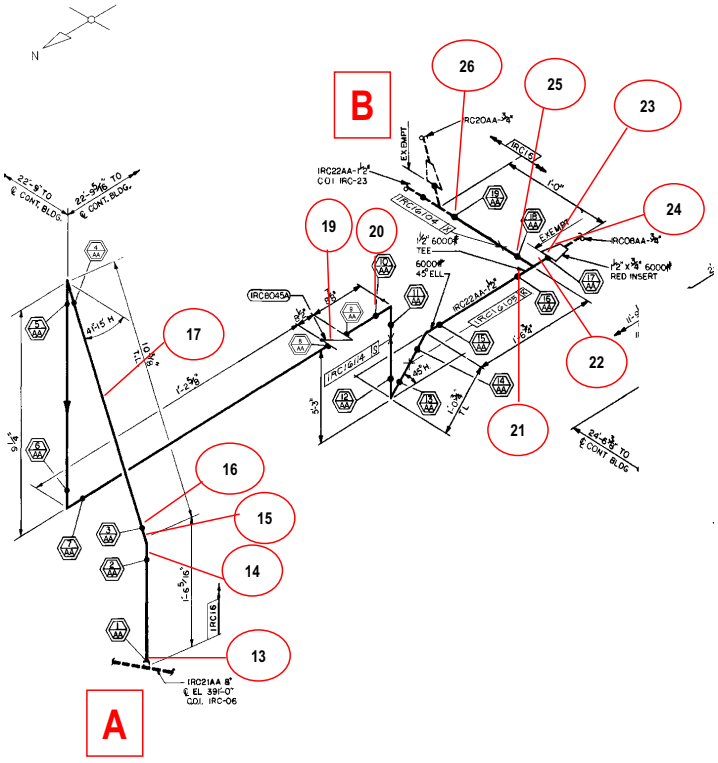

GROUP 13: RCS Stop Valve Loop Bypass Line (Sheet 3 of 3)
(Covers Worksheets RCS-LPBYP – 1 thru 38)

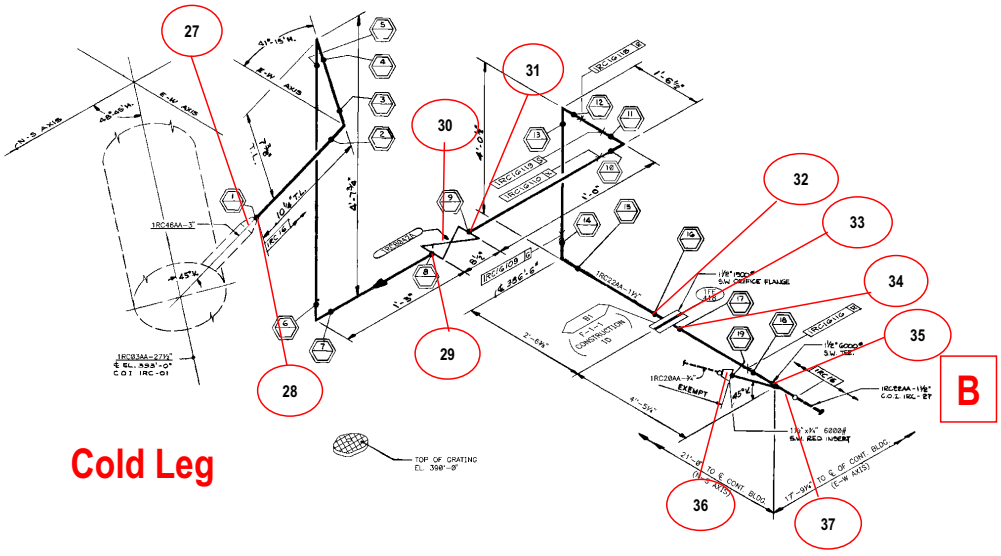

ENGINEERED SAFETY FEATURES (ESF)
EMERGENCY CORE COOLING SYSTEMS (ECCS)
(Numbers Represent Groups)

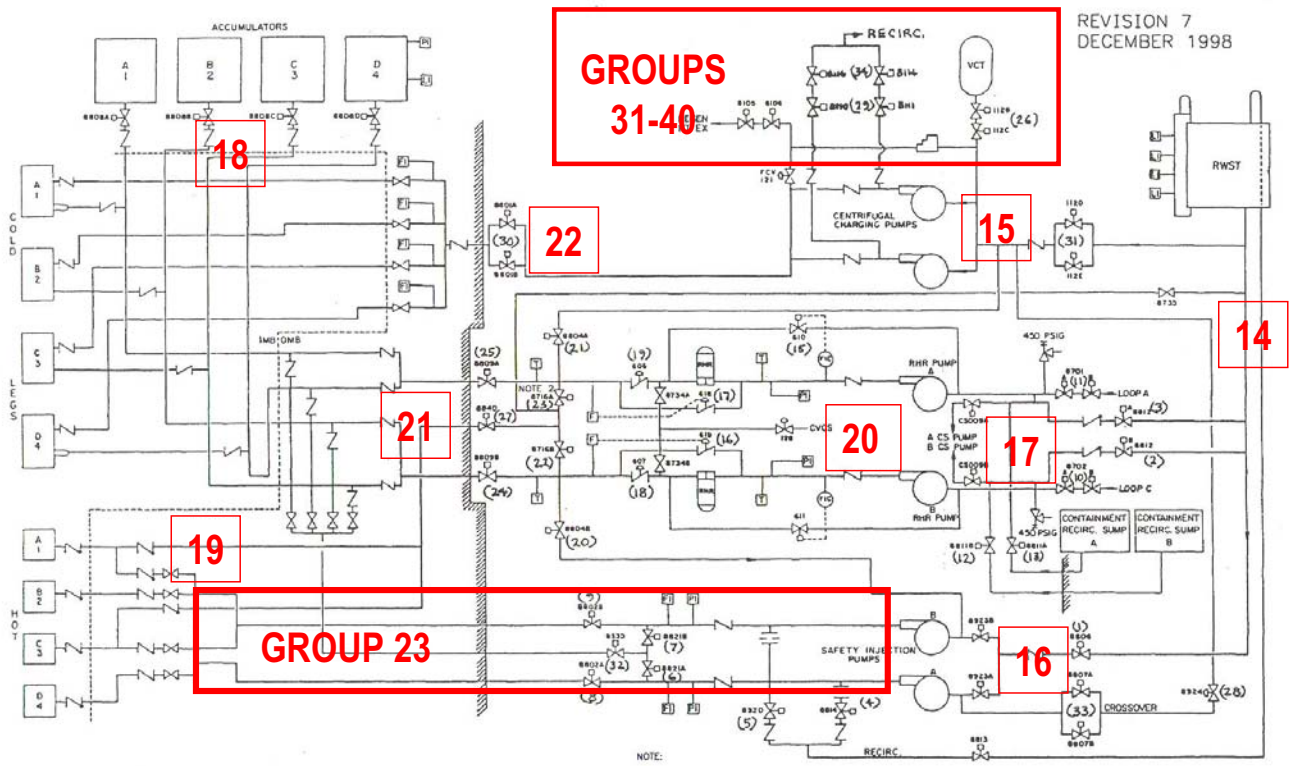

GROUP 14: RWST HEADER (Sheet 1 of 3)
(Covers Worksheets ECCS-RWSTHDR – 1 thru 56)

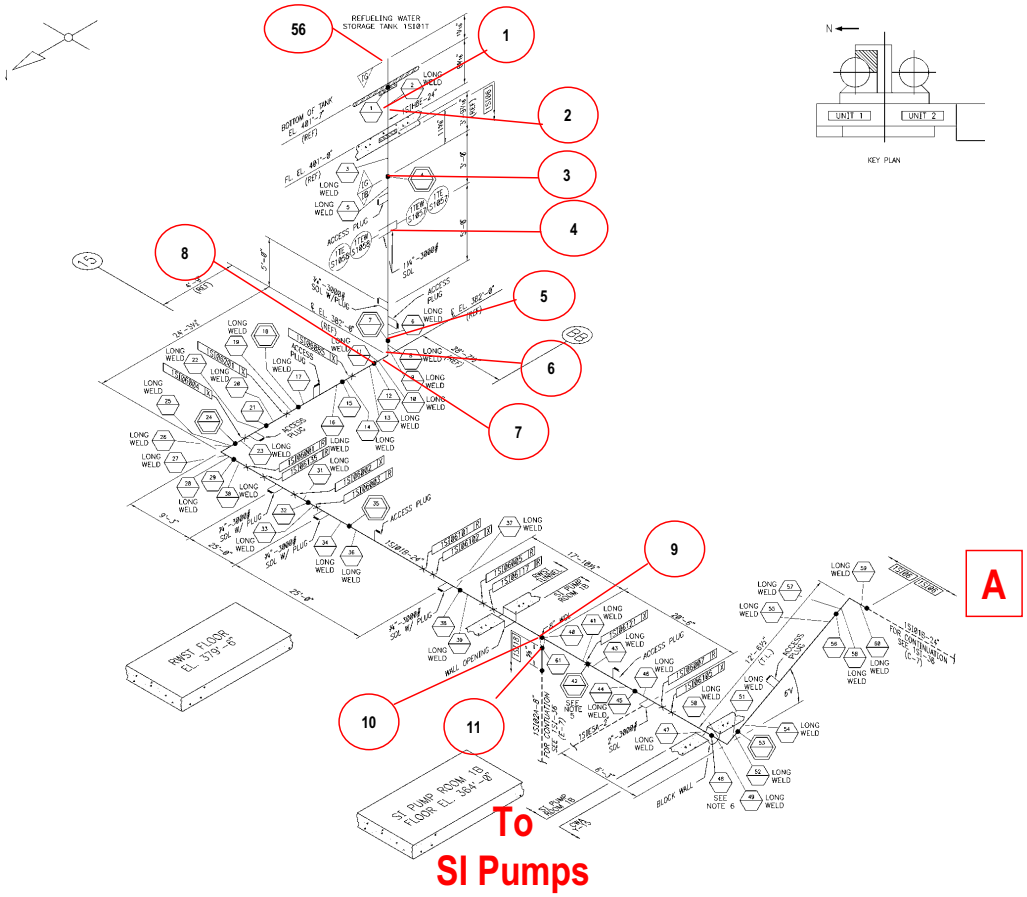

GROUP 14: RWST HEADER (Sheet 2 of 3)
(Covers Worksheets ECCS-RWSTHDR – 1 thru 56)

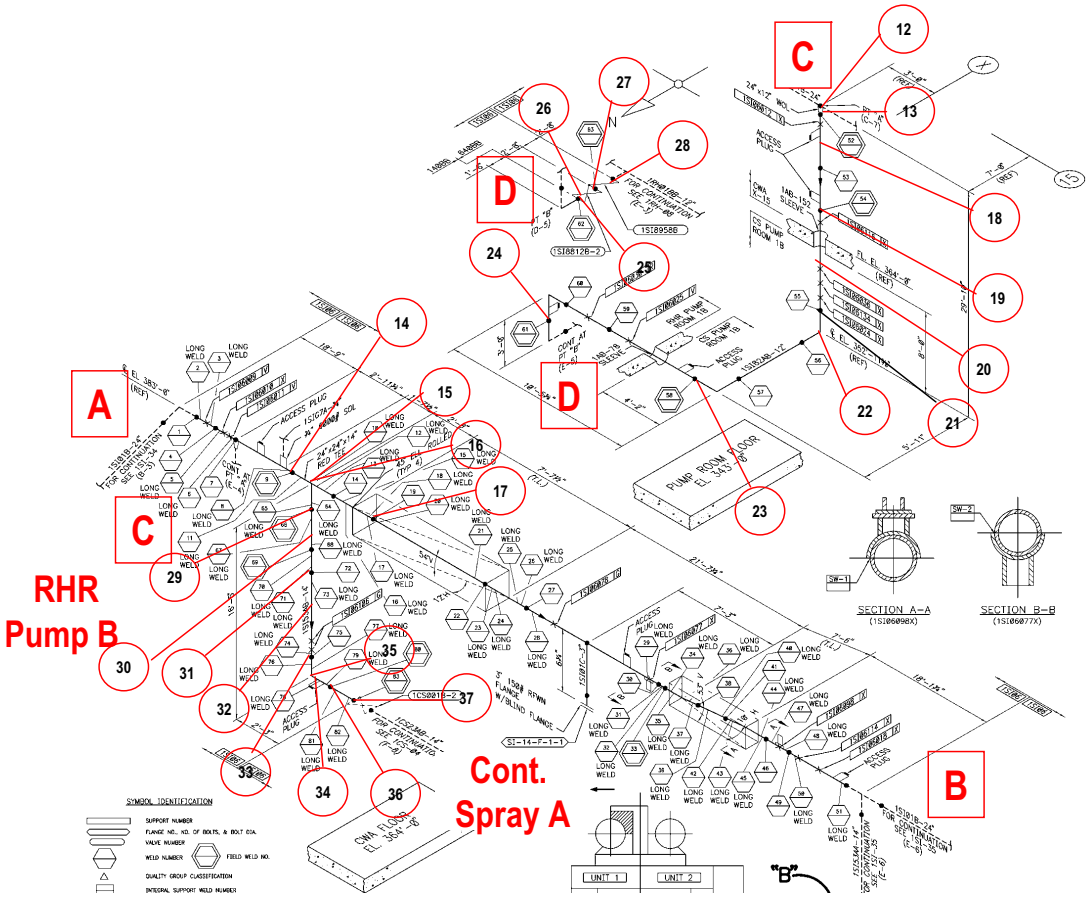

GROUP 14: RWST HEADER (Sheet 3 of 3)
(Covers Worksheets ECCS-RWSTHDR – 1 thru 56)

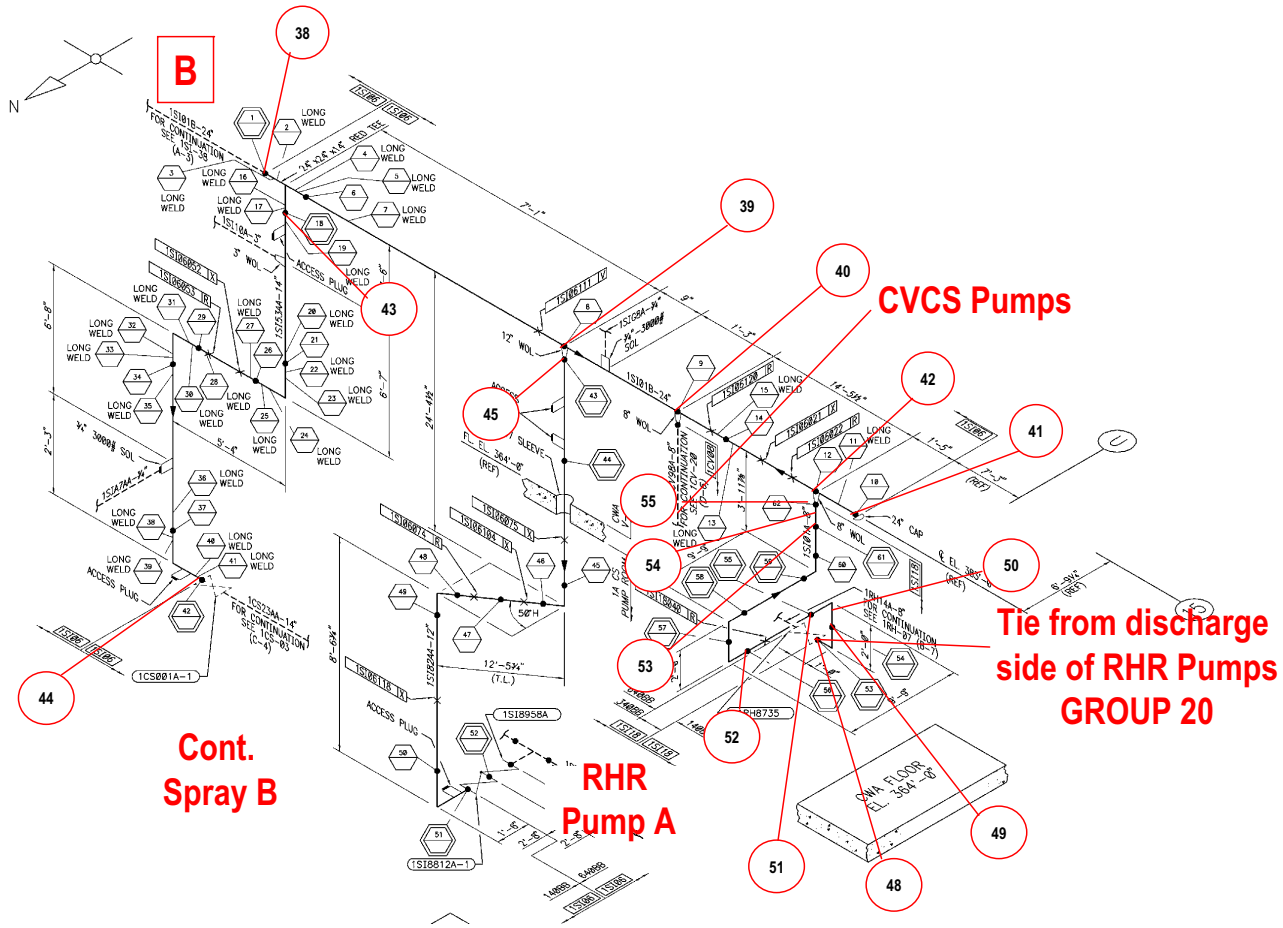

GROUP 15: CVCS Pump Suction Lines (Sheet 1 of 4)
(Covers Worksheets ECCS-CVPMPS – 1 thru 57)

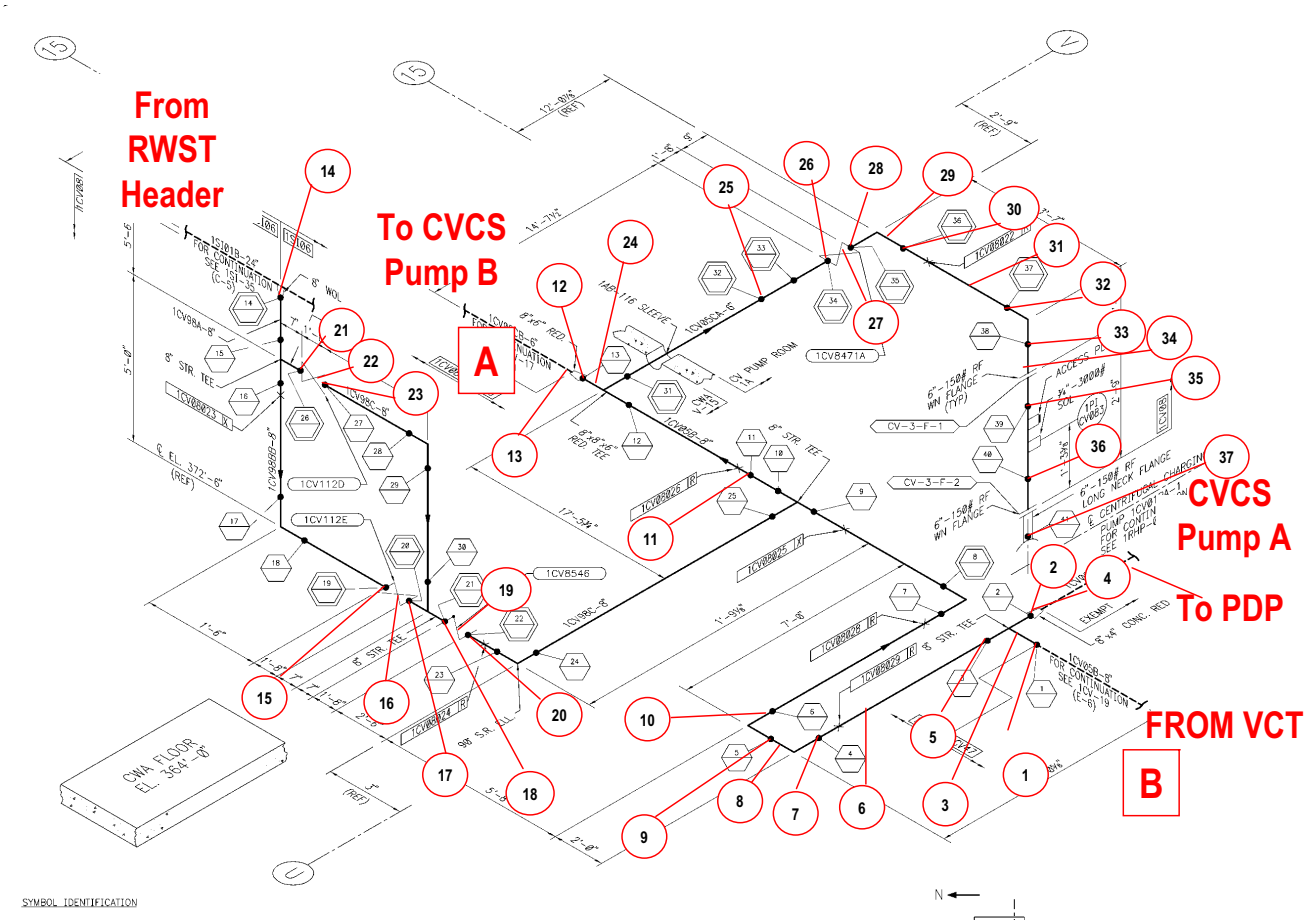

GROUP 15: CVCS Pump Suction Lines (Sheet 2 of 4)
(Covers Worksheets ECCS-CVPMPS – 1 thru 57)

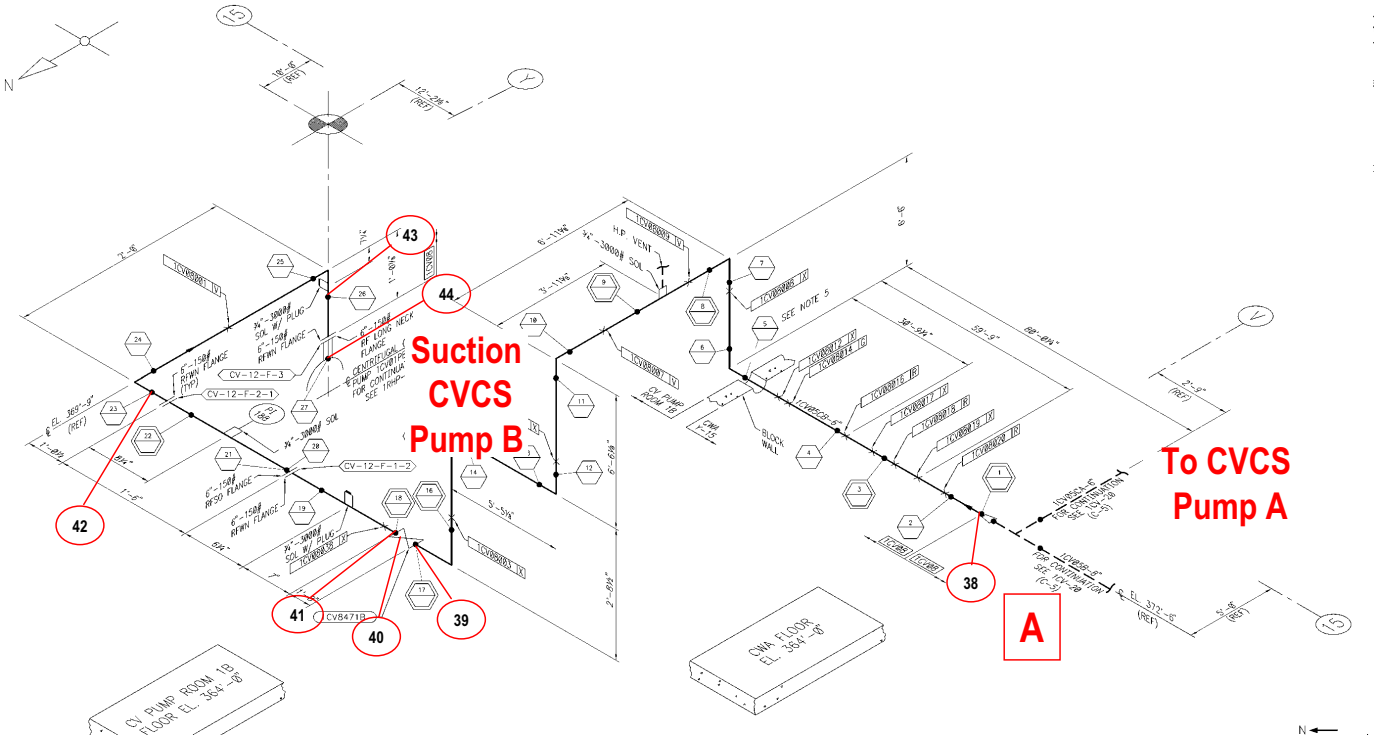

GROUP 15: CVCS Pump Suction Lines (Sheet 3 of 4)
(Covers Worksheets ECCS-CVPMPS – 1 thru 57)

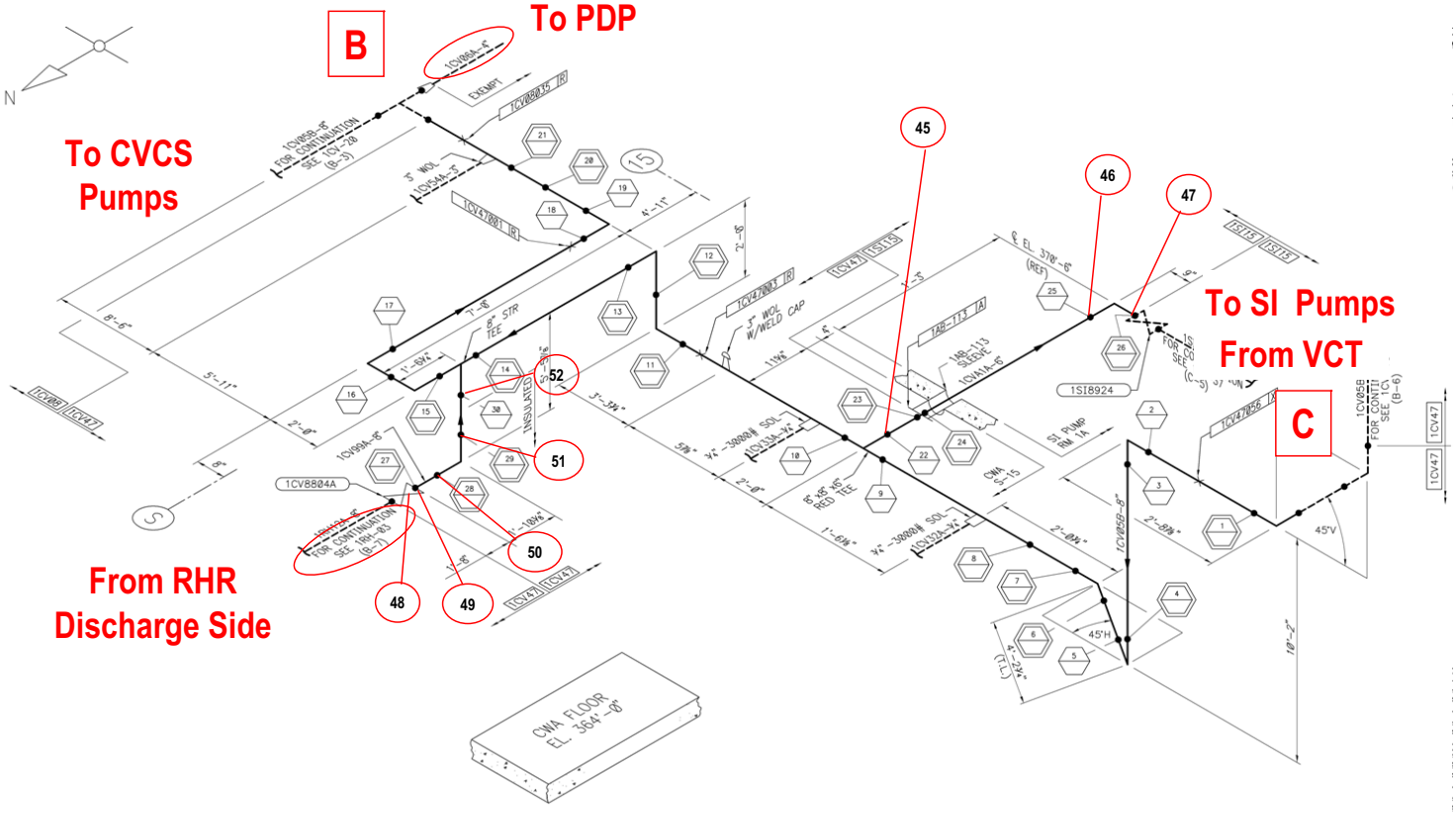

GROUP 15: CVCS Pump Suction Lines (Sheet 4 of 4)
(Covers Worksheets ECCS-CVPMPS – 1 thru 57)

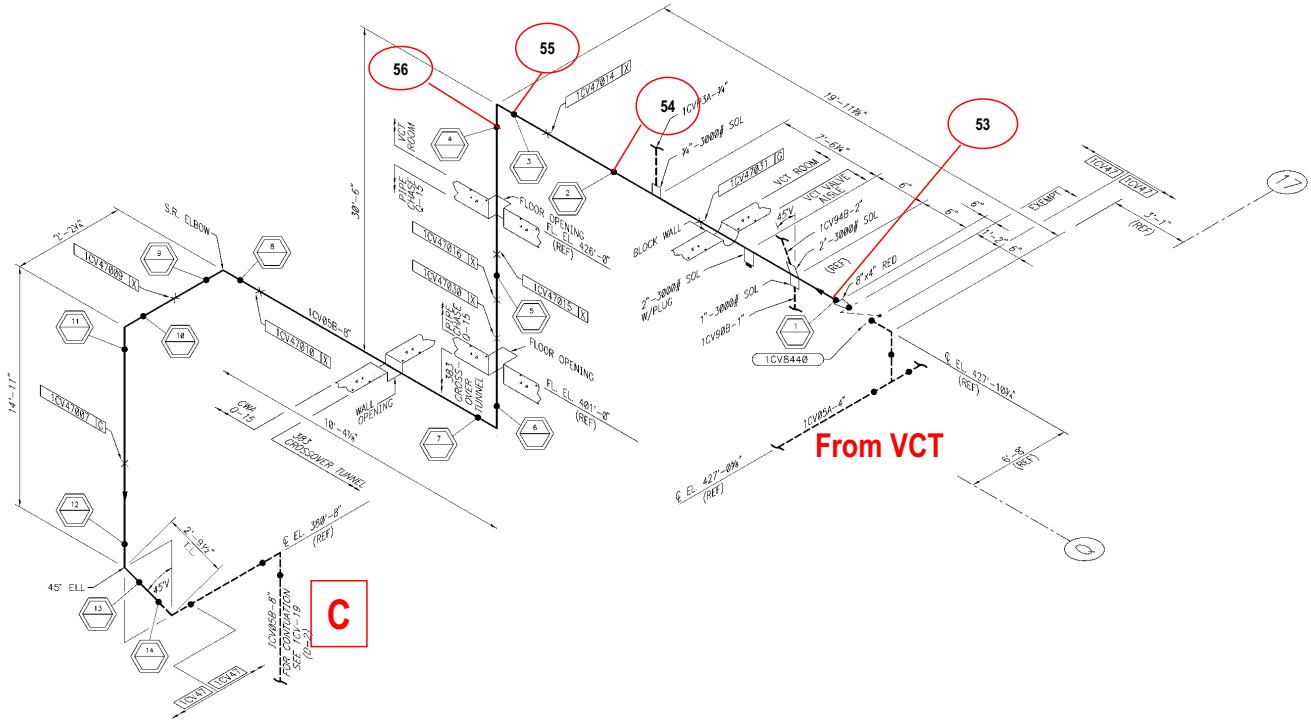

GROUP 16: SI Pump Suction Lines (Sheet 1 of 3)
(Covers Worksheets ECCS-SIPMPS – 1 thru 48)

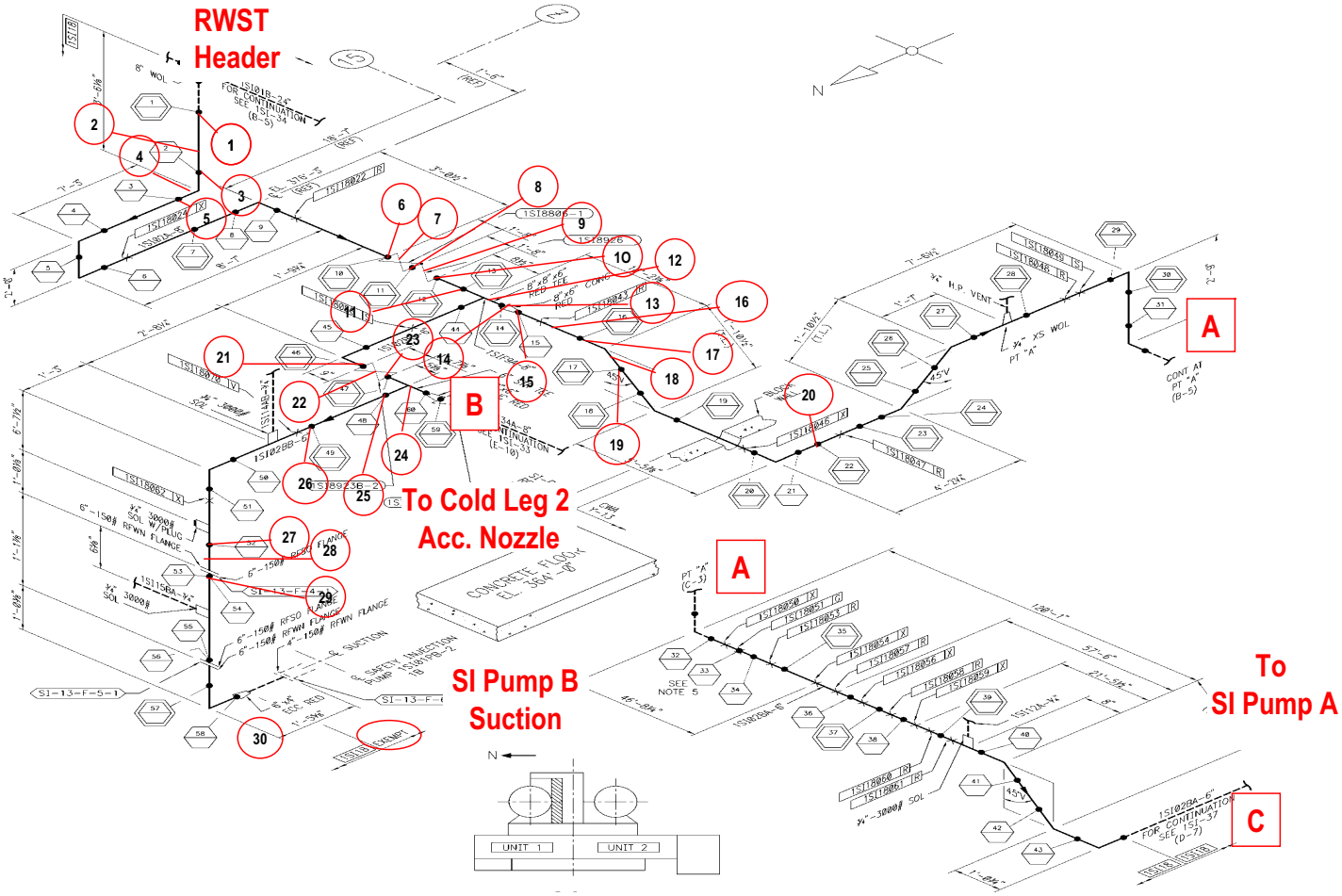

GROUP 16: SI Pump Suction Lines (Sheet 2 of 3) (Covers Worksheets ECCS-SIPMPS – 1 thru 48)

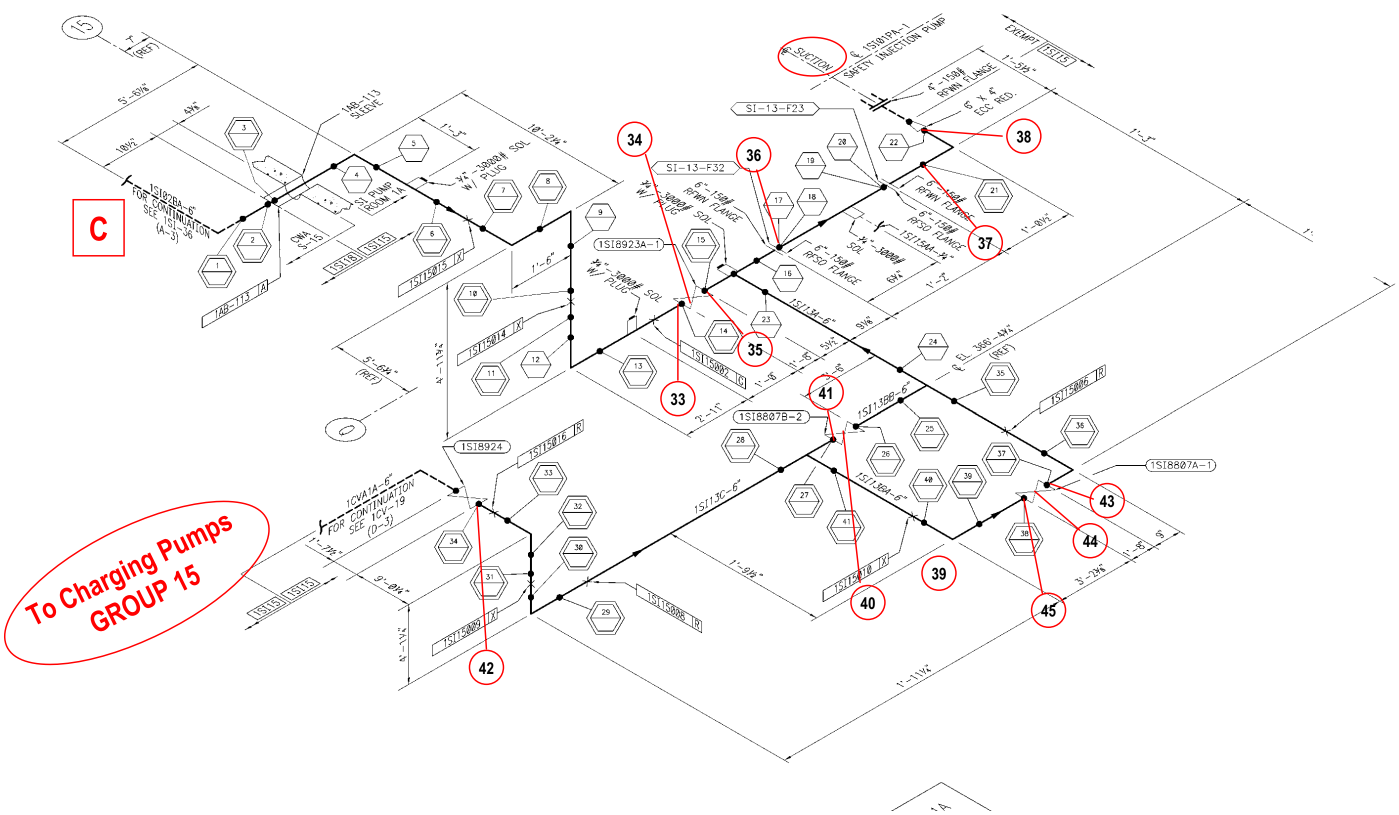

GROUP 16: SI Pump Suction Lines (Sheet 3 of 3)
(Covers Worksheets ECCS-SIPMPS – 1 thru 48)

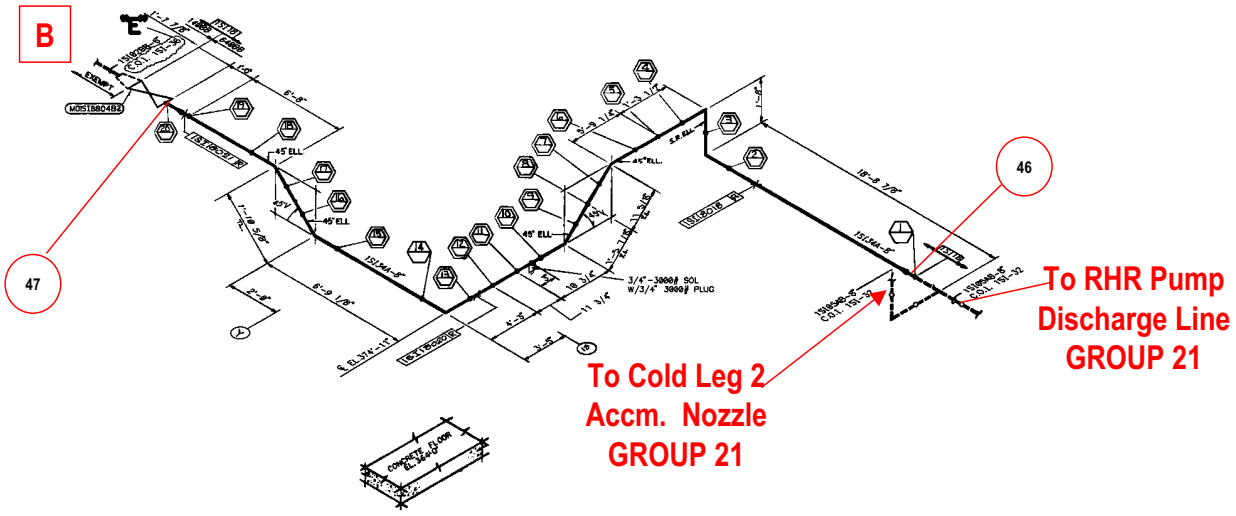

GROUP 17: RHR Pump Suction Lines (Sheet 1 of 3)
(Covers Worksheets ECCS-RHPMPS – 1 thru 77)

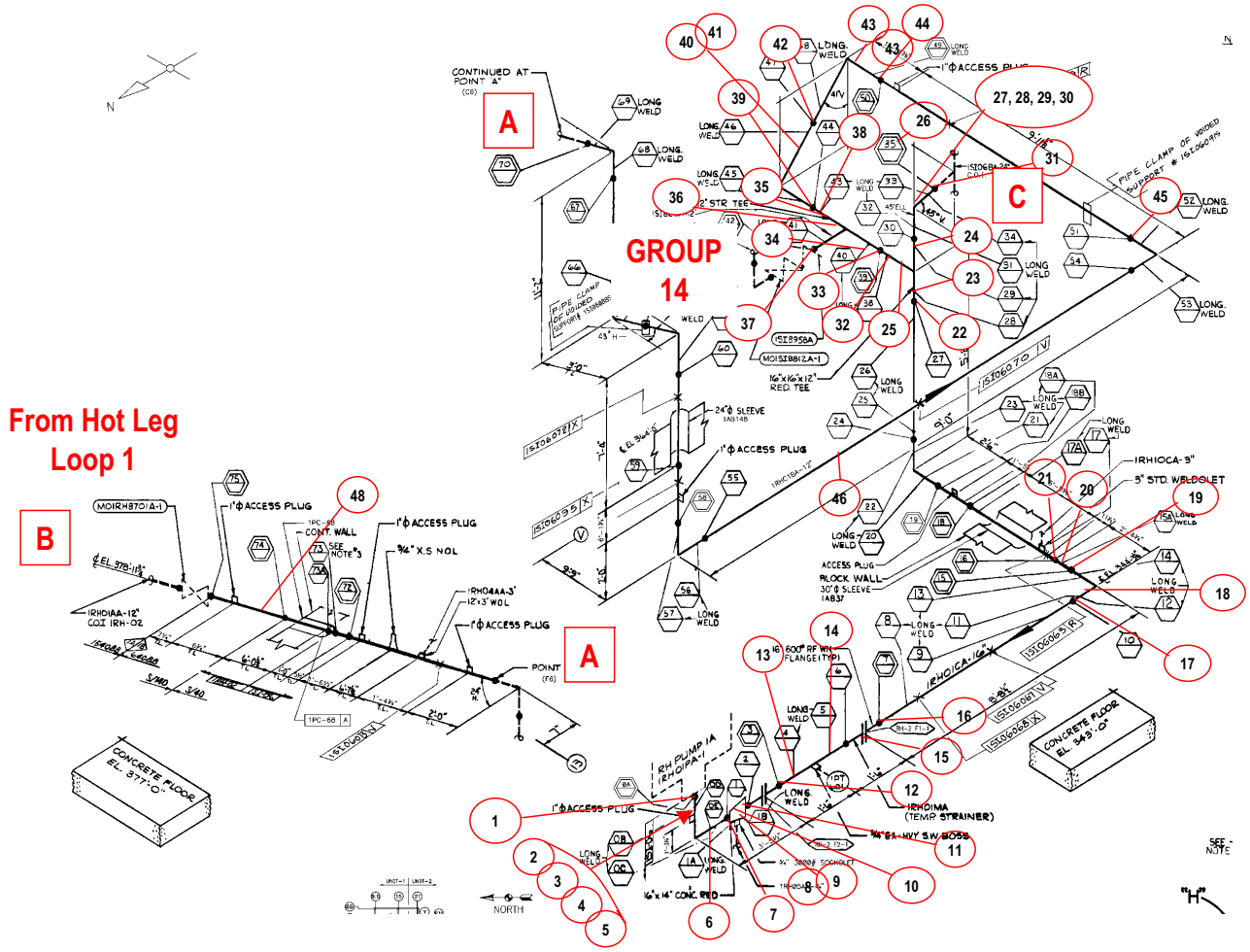

GROUP 17: RHR Pump Suction Lines (Sheet 2 of 3)
(Covers Worksheets ECCS-RHPMPS – 1 thru 77)

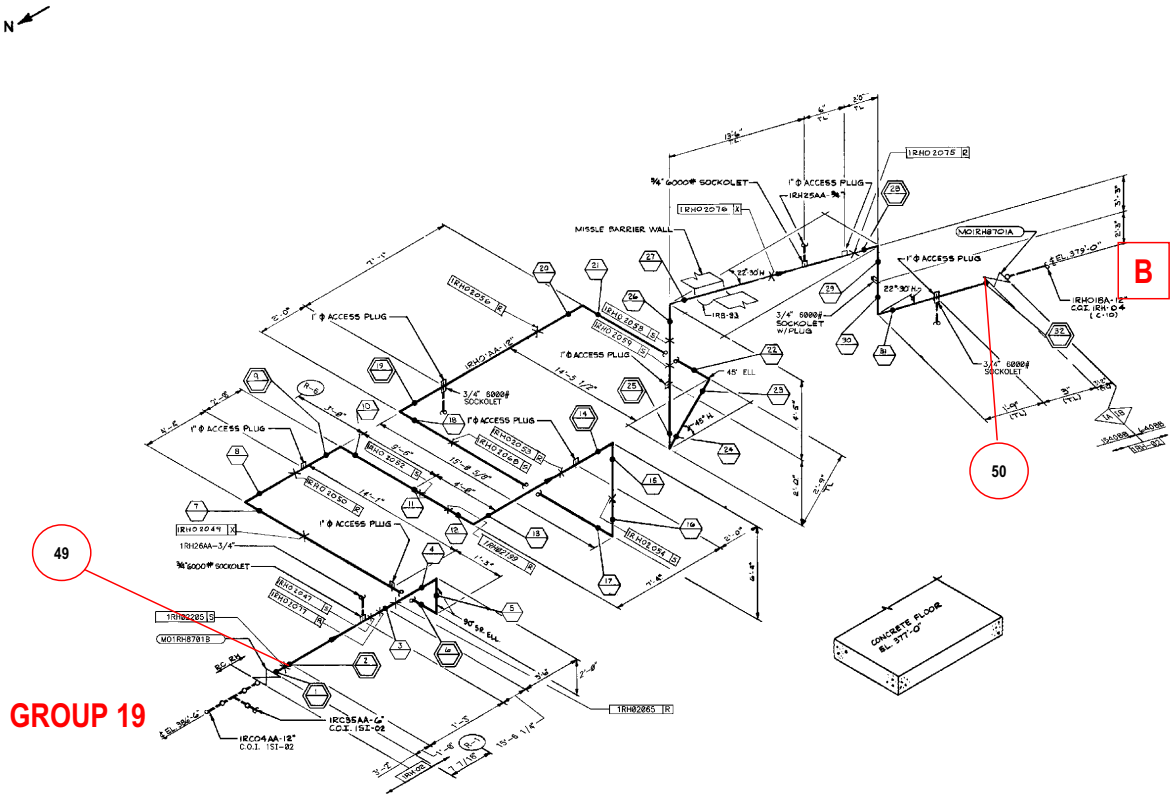

GROUP 17: RHR Pump Suction Lines (Sheet 3 of 3)
(Covers Worksheets ECCS-RHPMPS – 1 thru 77)

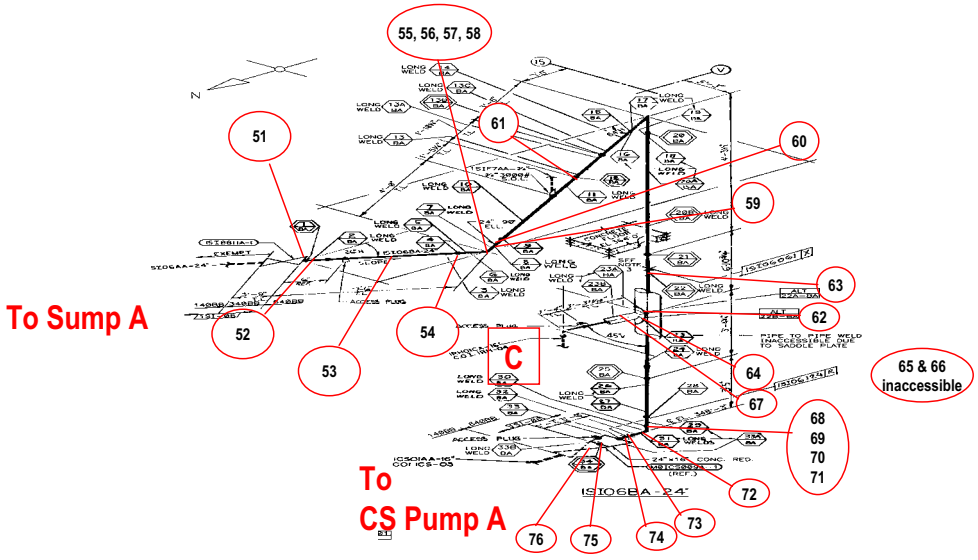

GROUP 18: Accumulator to RCS Cold Leg Connections (Sheet 1 of 2)
(Covers Worksheets ECCS-ACCM – 1 thru 41)

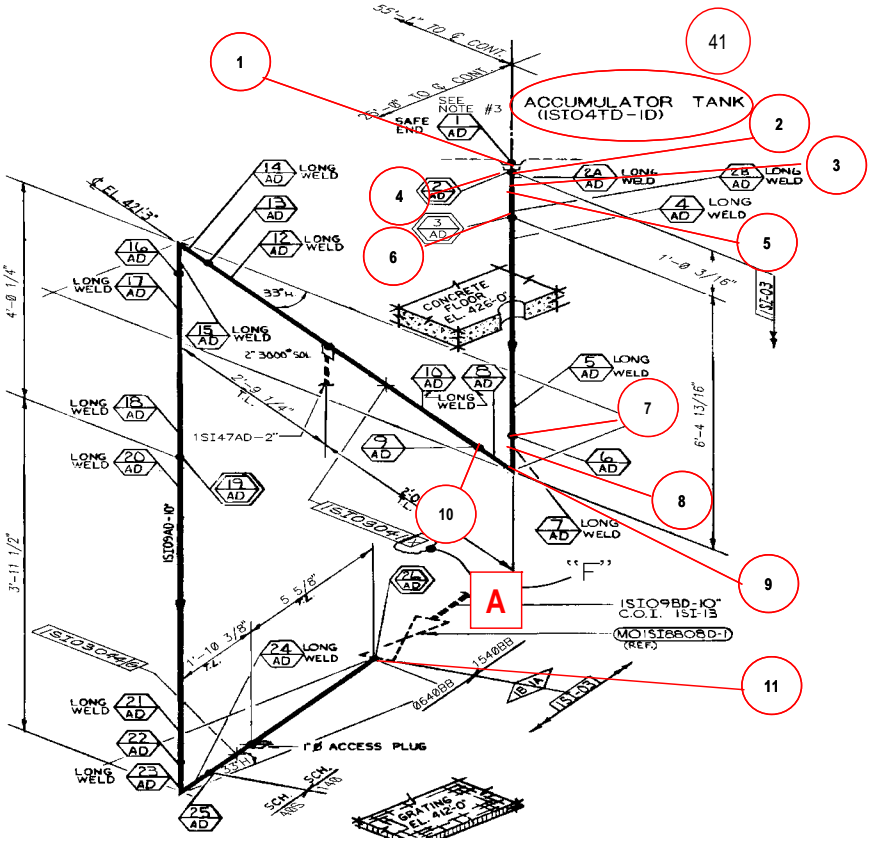

GROUP 18: Accumulator to RCS Cold Leg Connections (Sheet 2 of 2)
(Covers Worksheets ECCS-ACCM – 1 thru 41)

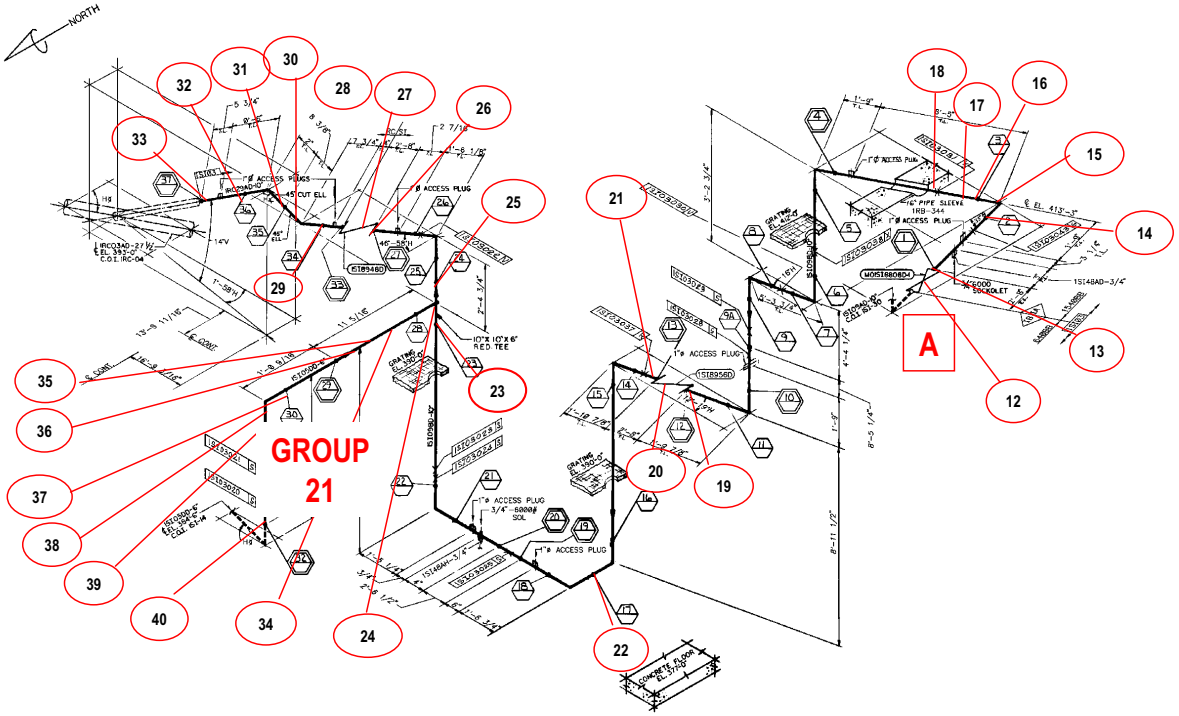

GROUP 19: SI/RHR to RCS Hot Leg Connections (Sheet 1 of 4)
(Covers Worksheets ECCS-HLCONN – 1 thru 58)

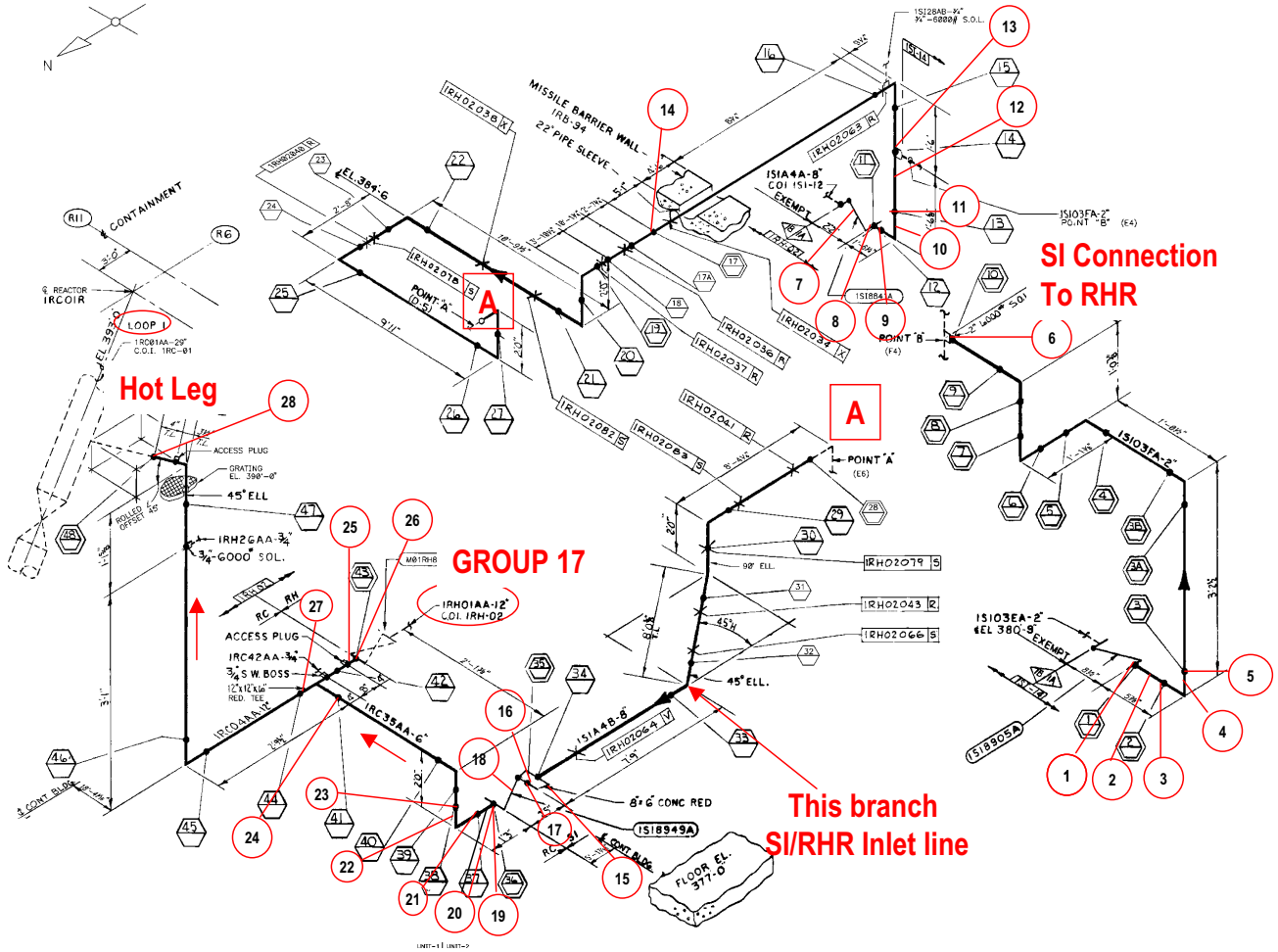

GROUP 19: SI/RHR to RCS Hot Leg Connections (Sheet 2 of 4)
(Covers Worksheets ECCS-HLCONN – 1 thru 58)

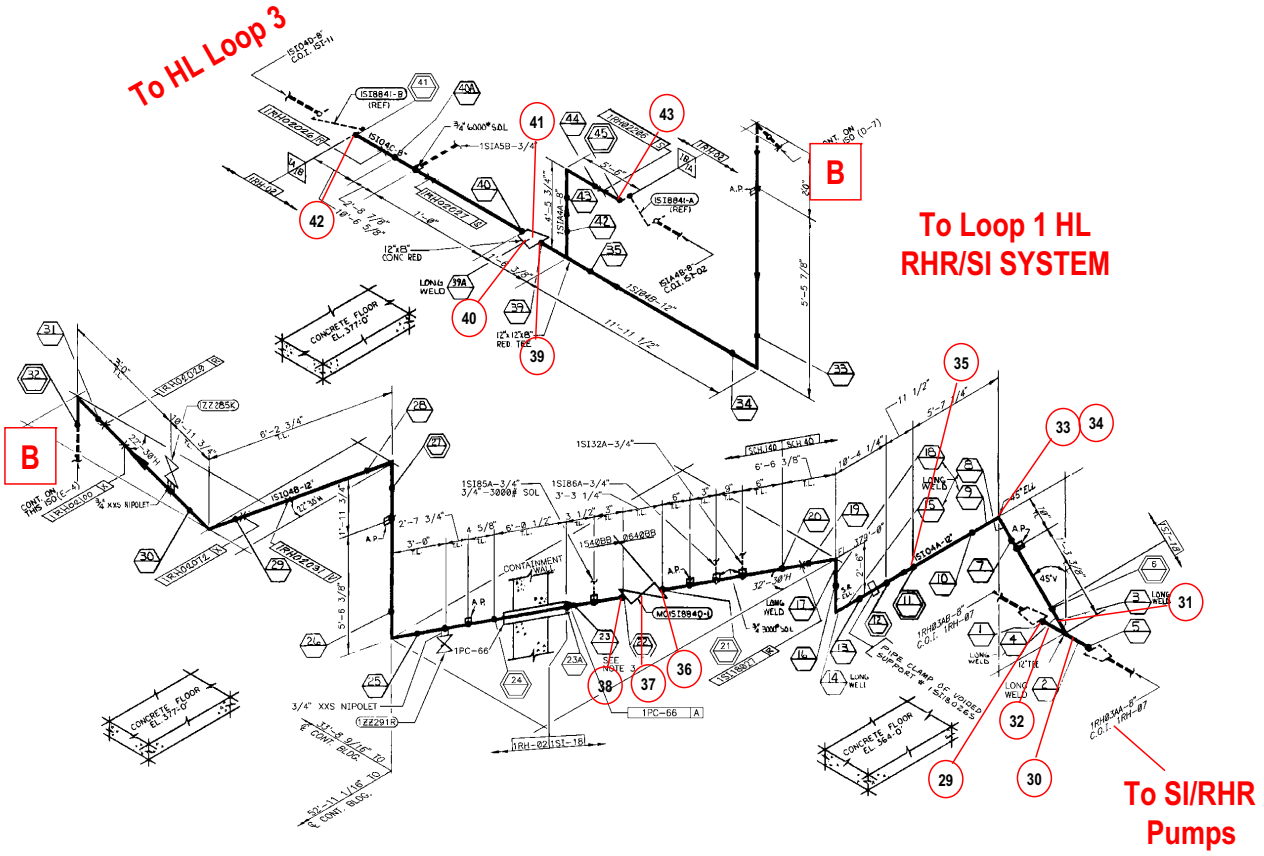

GROUP 19: SI/RHR to RCS Hot Leg Connections (Sheet 3 of 4)
(Covers Worksheets ECCS-HLCONN – 1 thru 58)

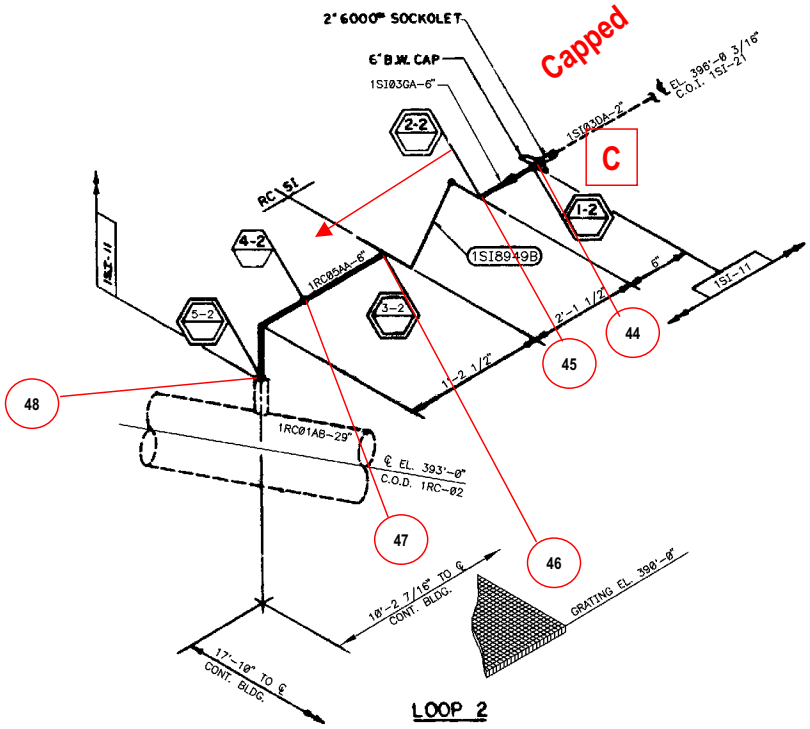

GROUP 19: SI/RHR to RCS Hot Leg Connections (Sheet 4 of 4)
(Covers Worksheets ECCS-HLCONN – 1 thru 58)

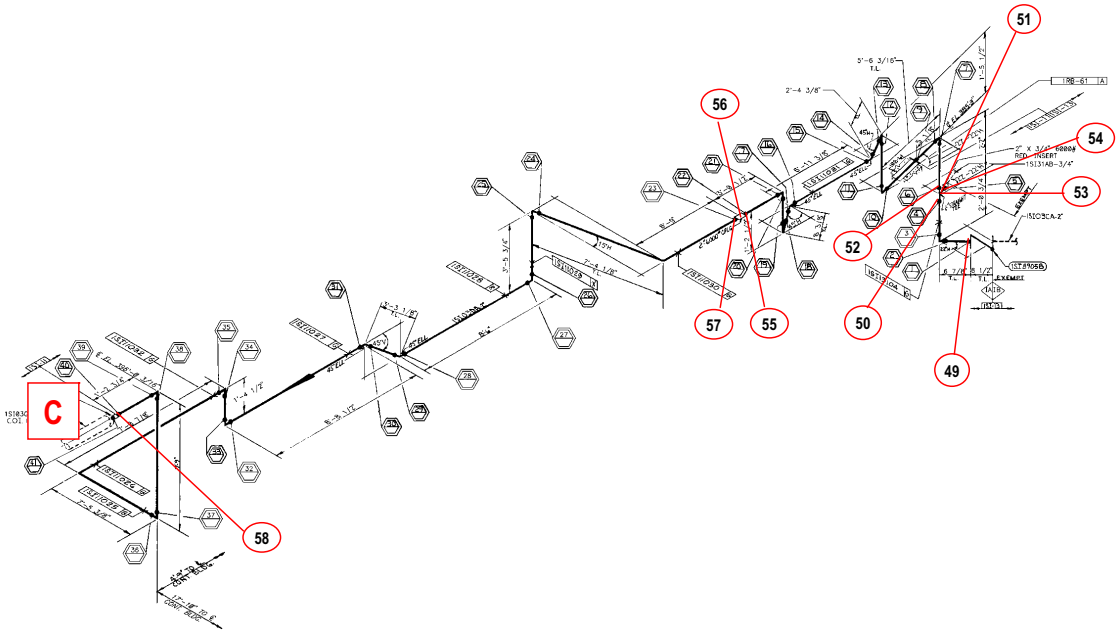

GROUP 20: RHR Pump Discharge Lines (Sheet 1 of 4)
(Covers Worksheets ECCS–RHPMPD – 1 thru 54)

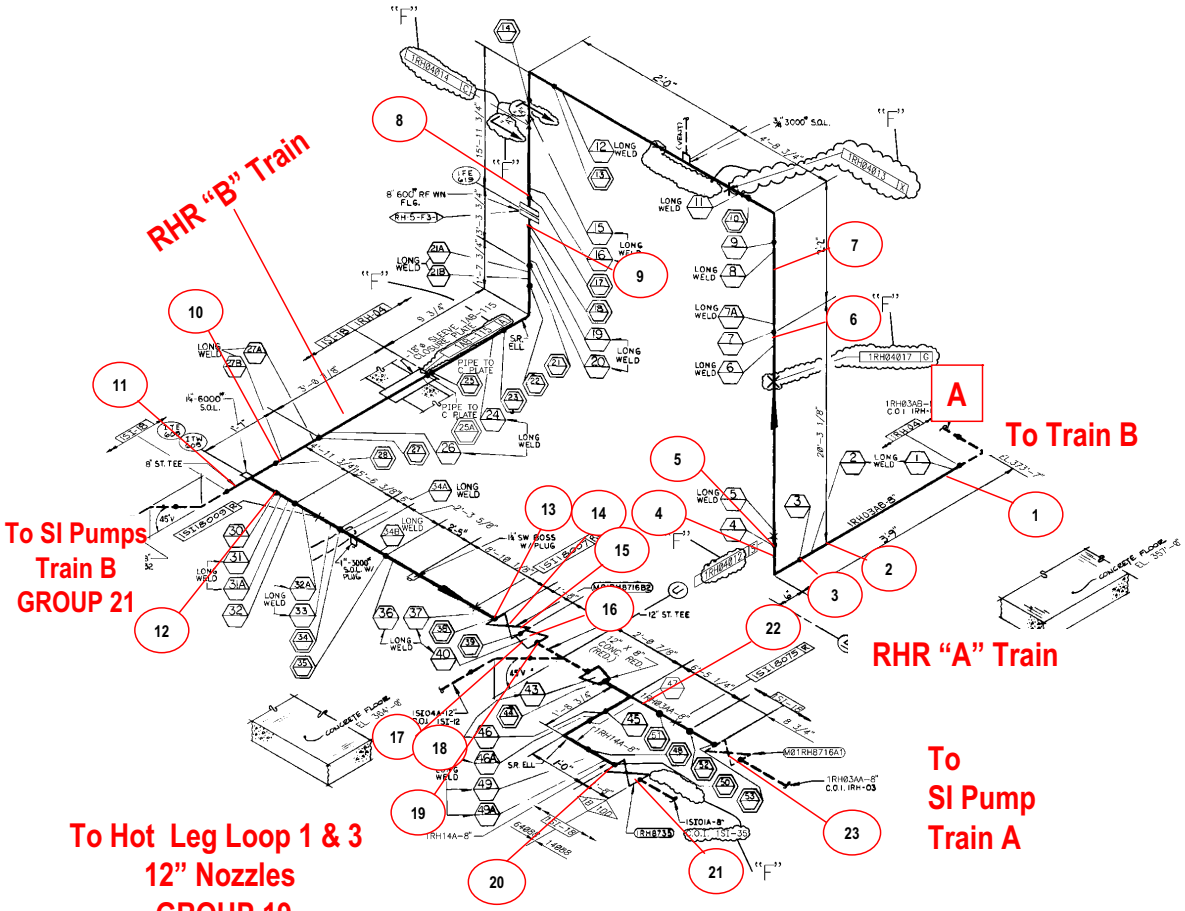

GROUP 20: RHR Pump Discharge Lines (Sheet 2 of 4)
(Covers Worksheets ECCS–RHPMPD – 1 thru 54)

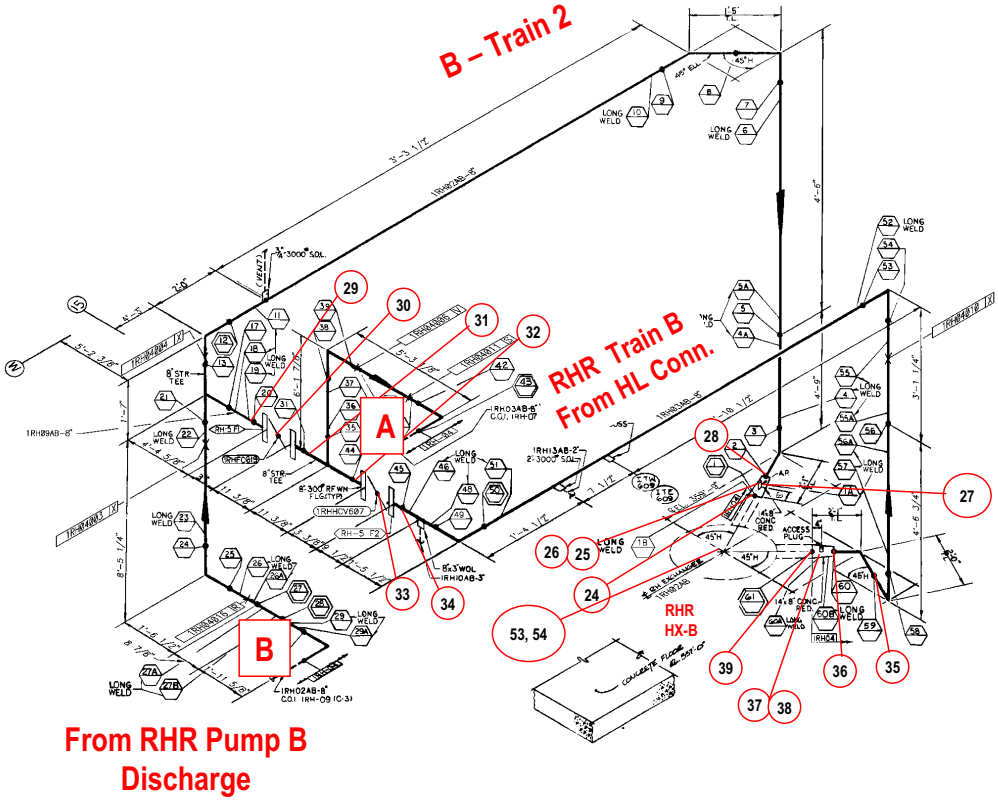

GROUP 20: RHR Pump Discharge Lines (Sheet 3 of 4)
(Covers Worksheets ECCS–RHPMPD – 1 thru 54)

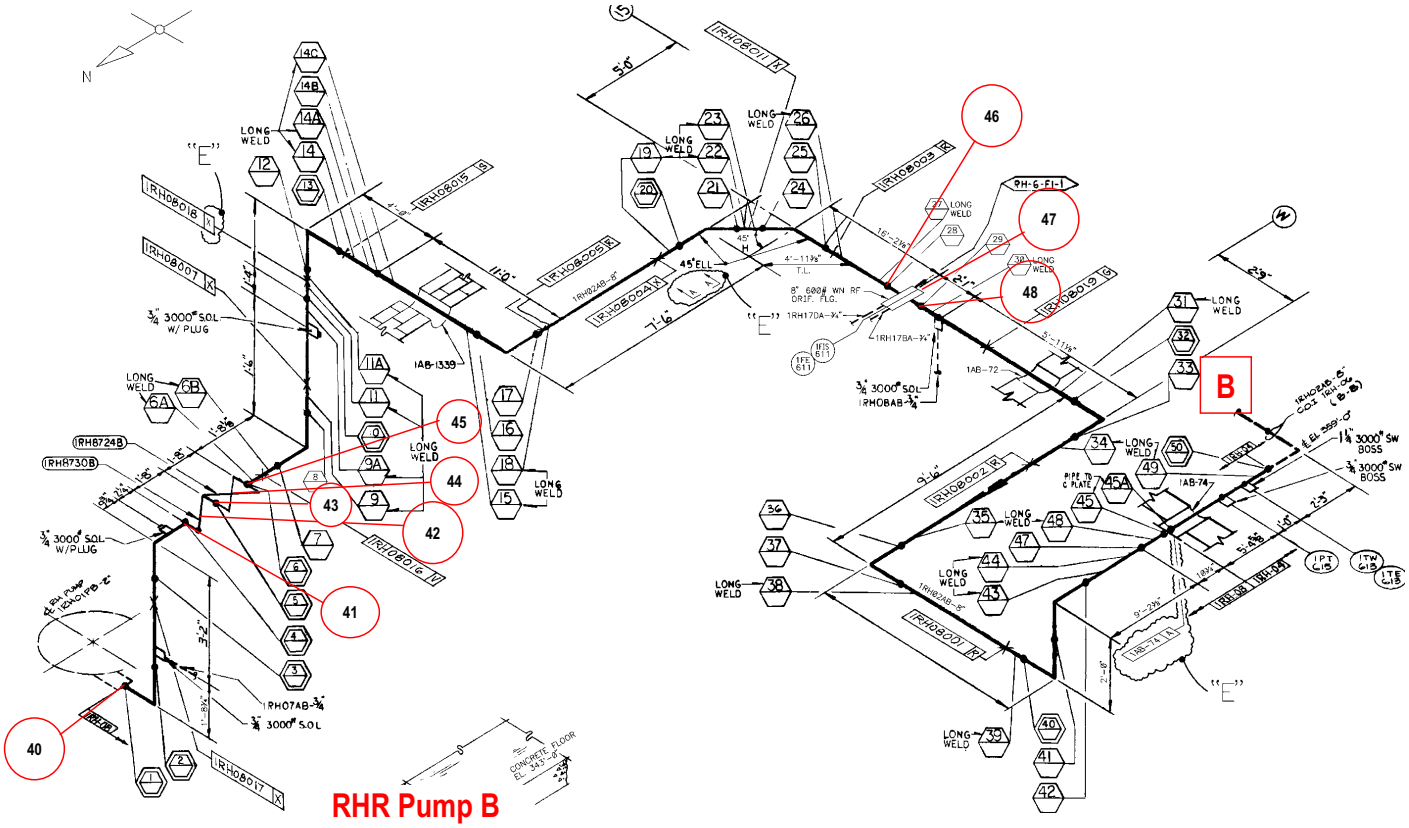

GROUP 20: RHR Pump Discharge Lines (Sheet 4 of 4)
(Covers Worksheets ECCS–RHPMPD – 1 thru 54)

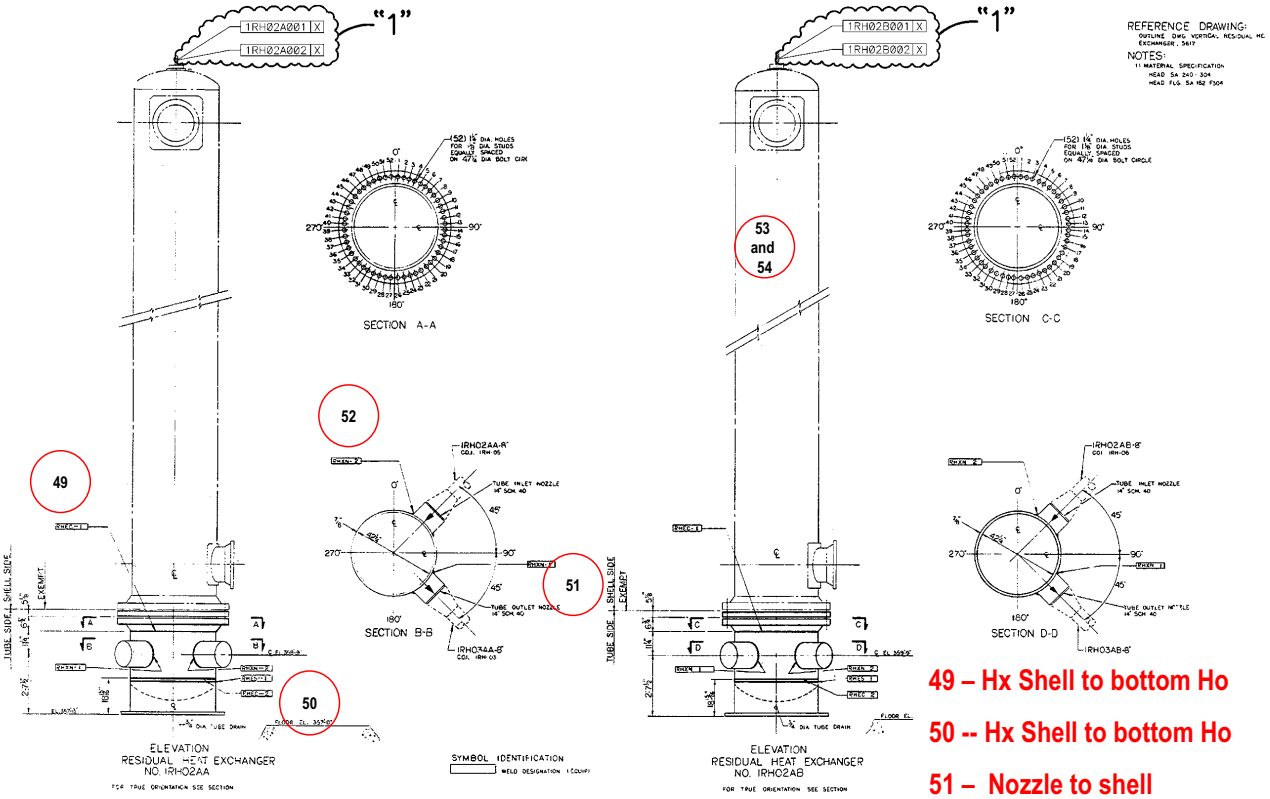

49 – Hx Shell to bottom Ho

50 -- Hx Shell to bottom Ho

51 – Nozzle to shell

52 – Nozzle to shell

GROUP 21: RHR TO RCS Cold Leg Accumulator Connections (Sheet 1 of 3)
(Covers Worksheets ECCS-RHRCL – 1 thru 30)

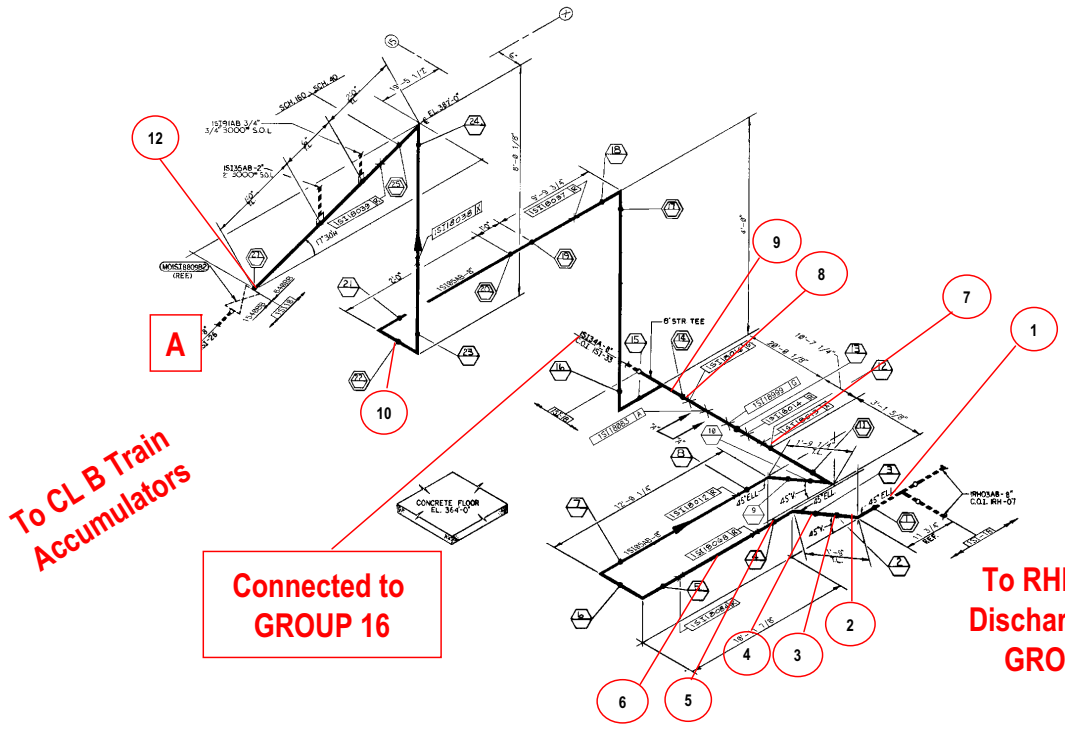

GROUP 21: RHR TO RCS Cold Leg Accumulator Connections (Sheet 2 of 3)
(Covers Worksheets ECCS-RHRCL – 1 thru 30)

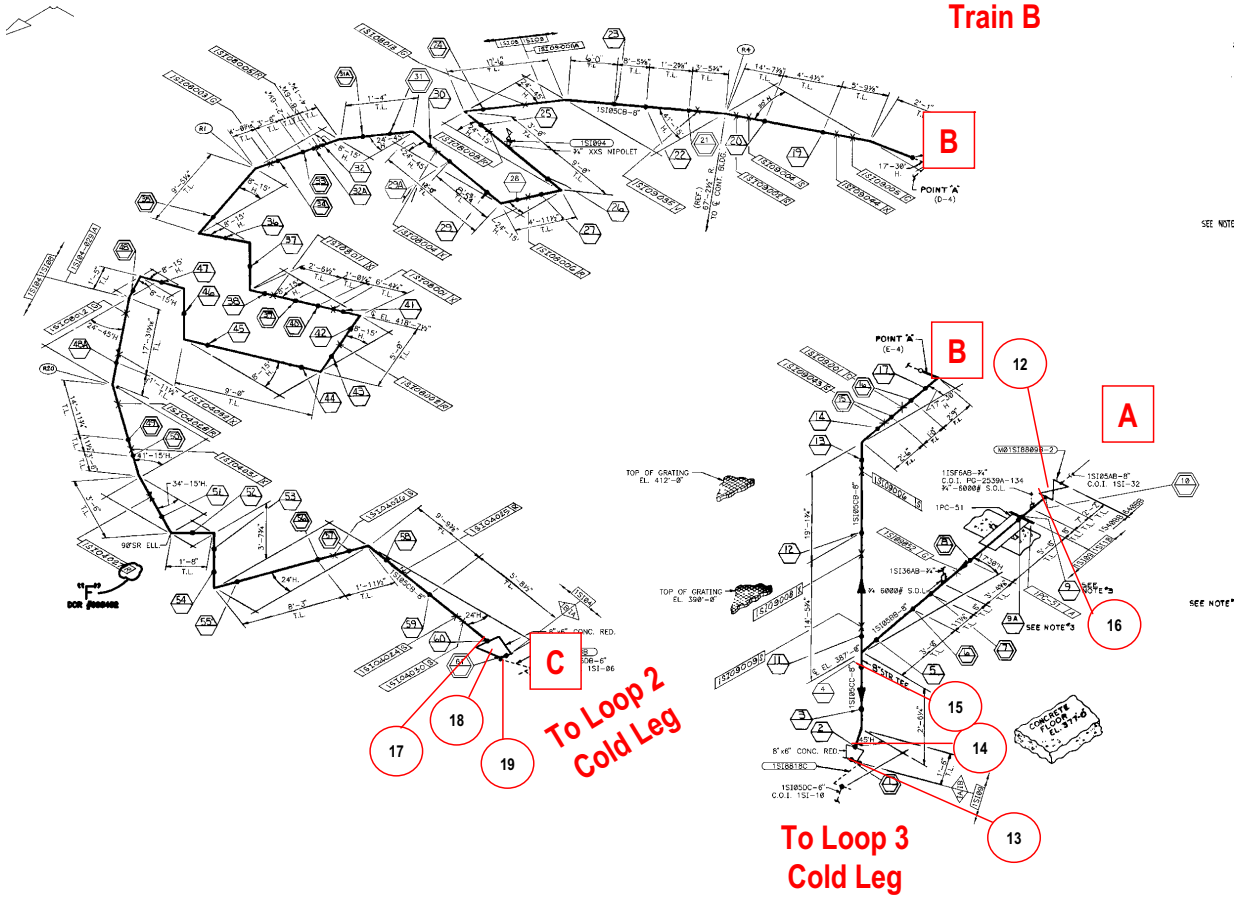

GROUP 21: RHR TO RCS Cold Leg Accumulator Connections (Sheet 3 of 3)
(Covers Worksheets ECCS-RHRCL – 1 thru 30)

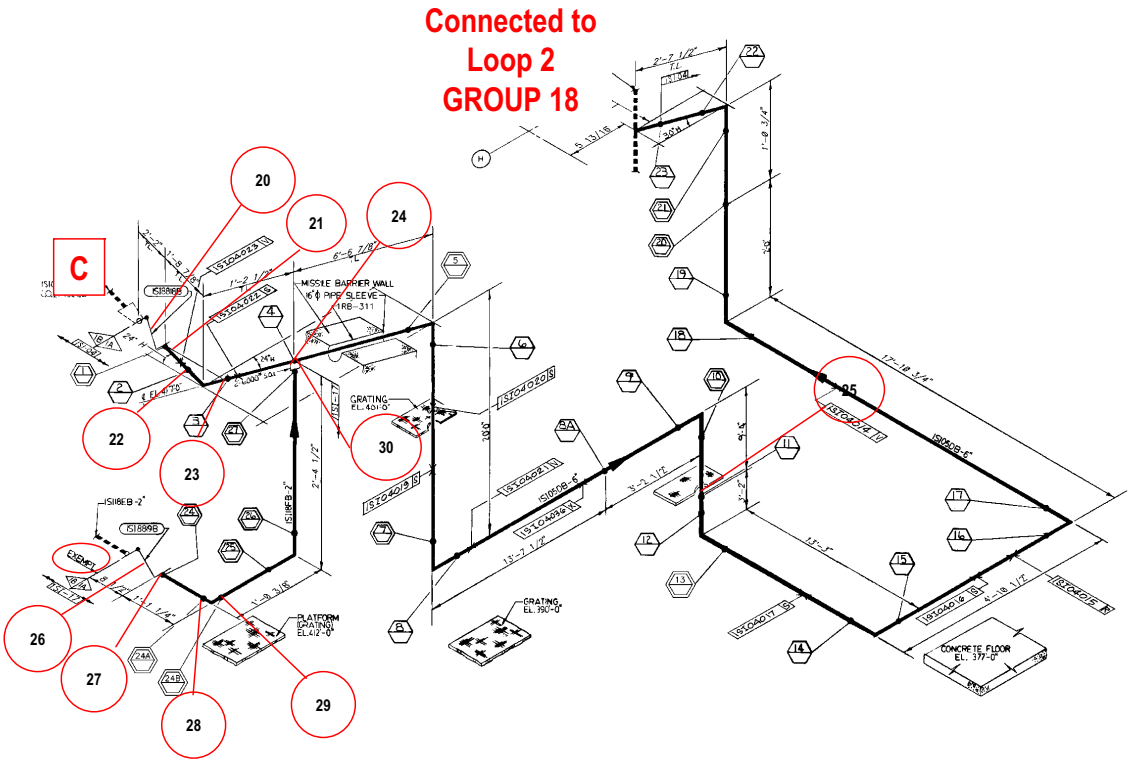

GROUP 22: Charging System to Cold Leg Injection (Sheet 1 of 6)
(Covers Worksheets ECCS–CVCL – 1 thru 86)

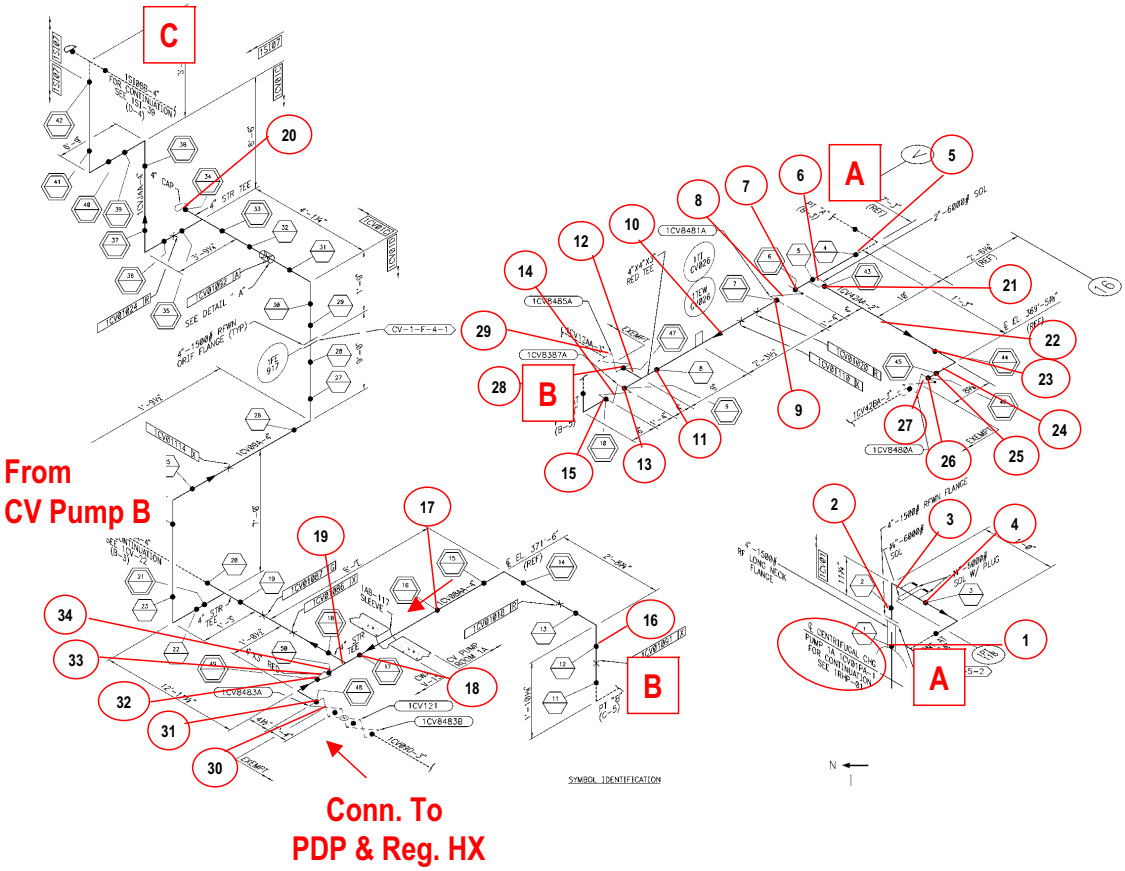

GROUP 22: Charging System to Cold Leg Injection (Sheet 2 of 6)
(Covers Worksheets ECCS–CVCL – 1 thru 86)

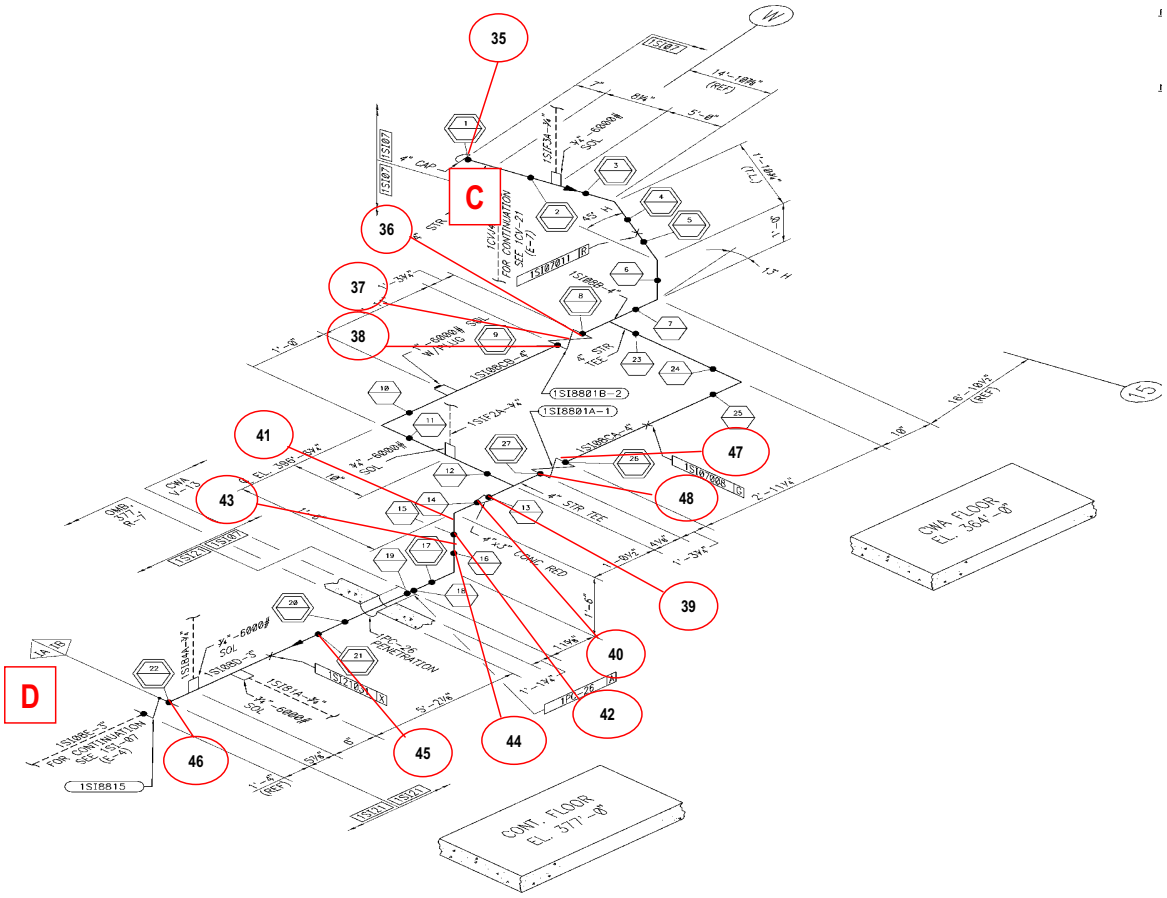

GROUP 22: Charging System to Cold Leg Injection (Sheet 3 of 6)
(Covers Worksheets ECCS–CVCL – 1 thru 86)

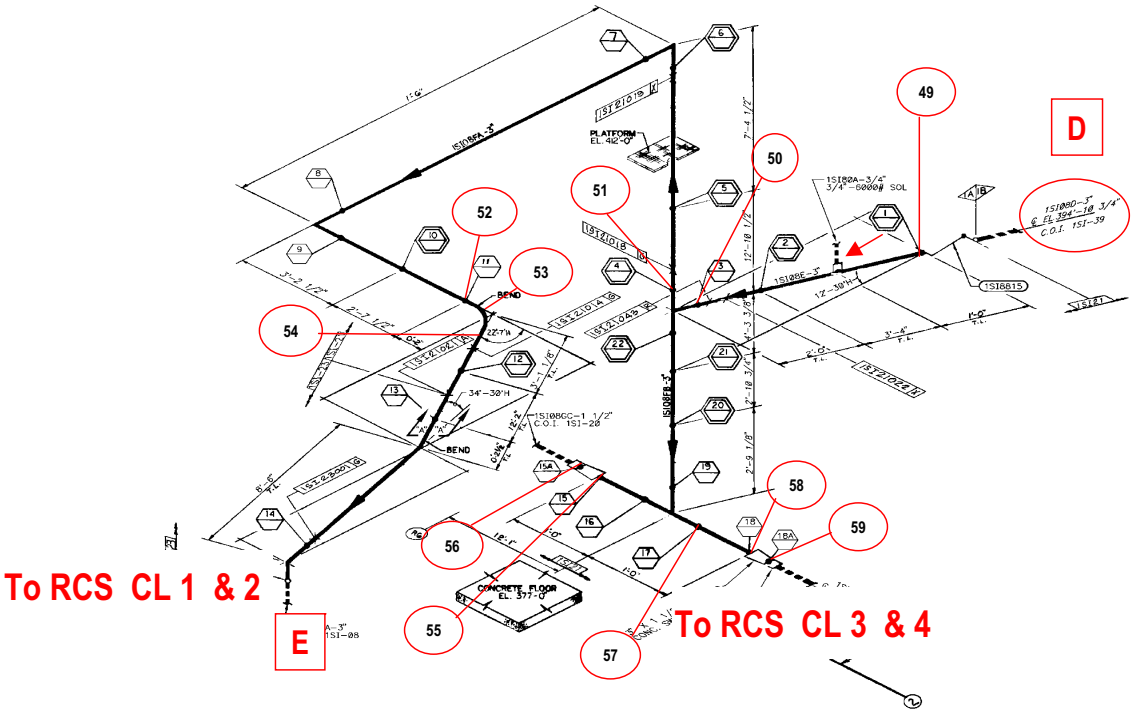

GROUP 22: Charging System to Cold Leg Injection (Sheet 4 of 6)
(Covers Worksheets ECCS–CVCL – 1 thru 86)

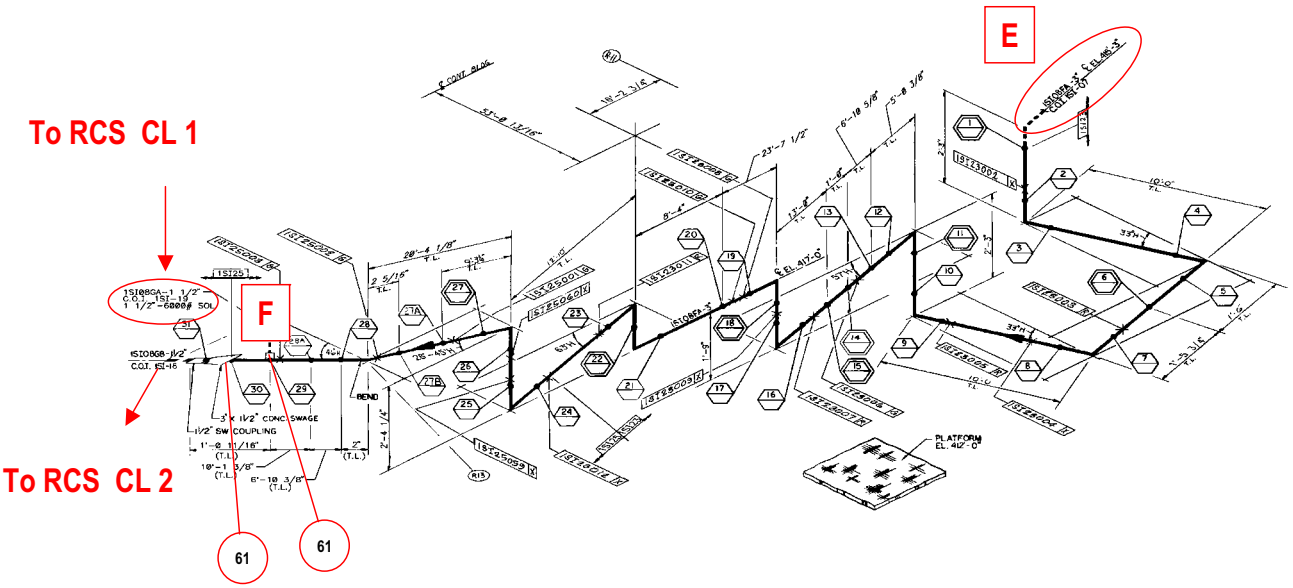

GROUP 22: Charging System to Cold Leg Injection (Sheet 5 of 6)
(Covers Worksheets ECCS–CVCL – 1 thru 86)

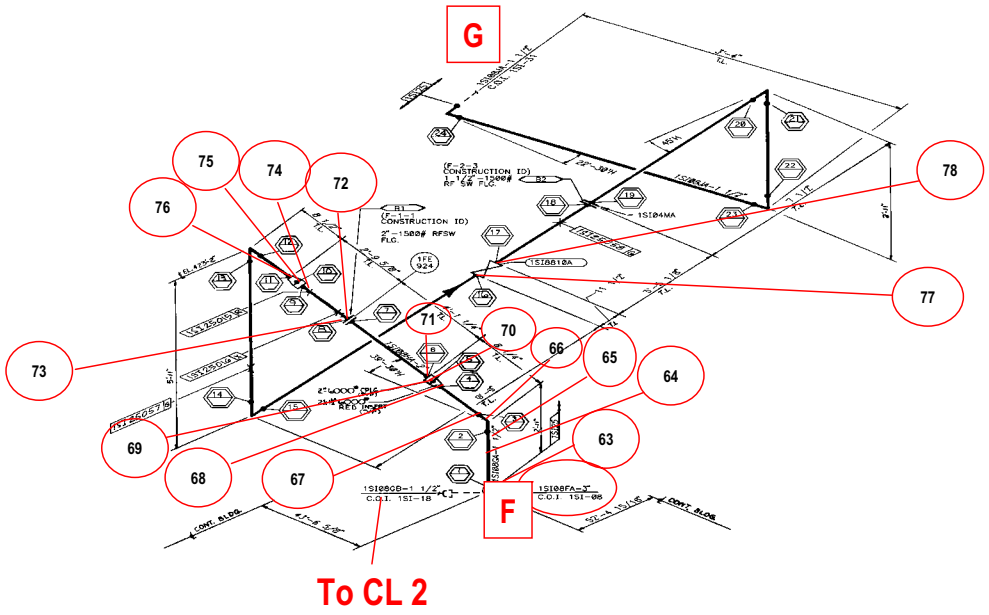

GROUP 22: Charging System to Cold Leg Injection (Sheet 6 of 6)
(Covers Worksheets ECCS–CVCL – 1 thru 86)

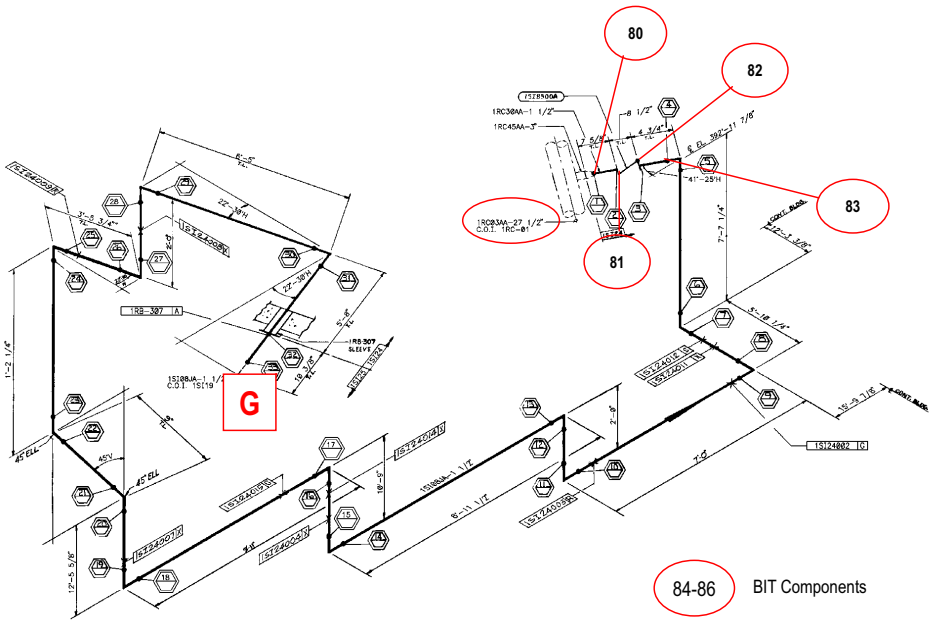

GROUP 23 –SAFETY INJECTION PUMP DISCHARGE (Sheet 1 of 7)
(Covers Worksheets ECCS-SIPMPD – 1 thru 53)

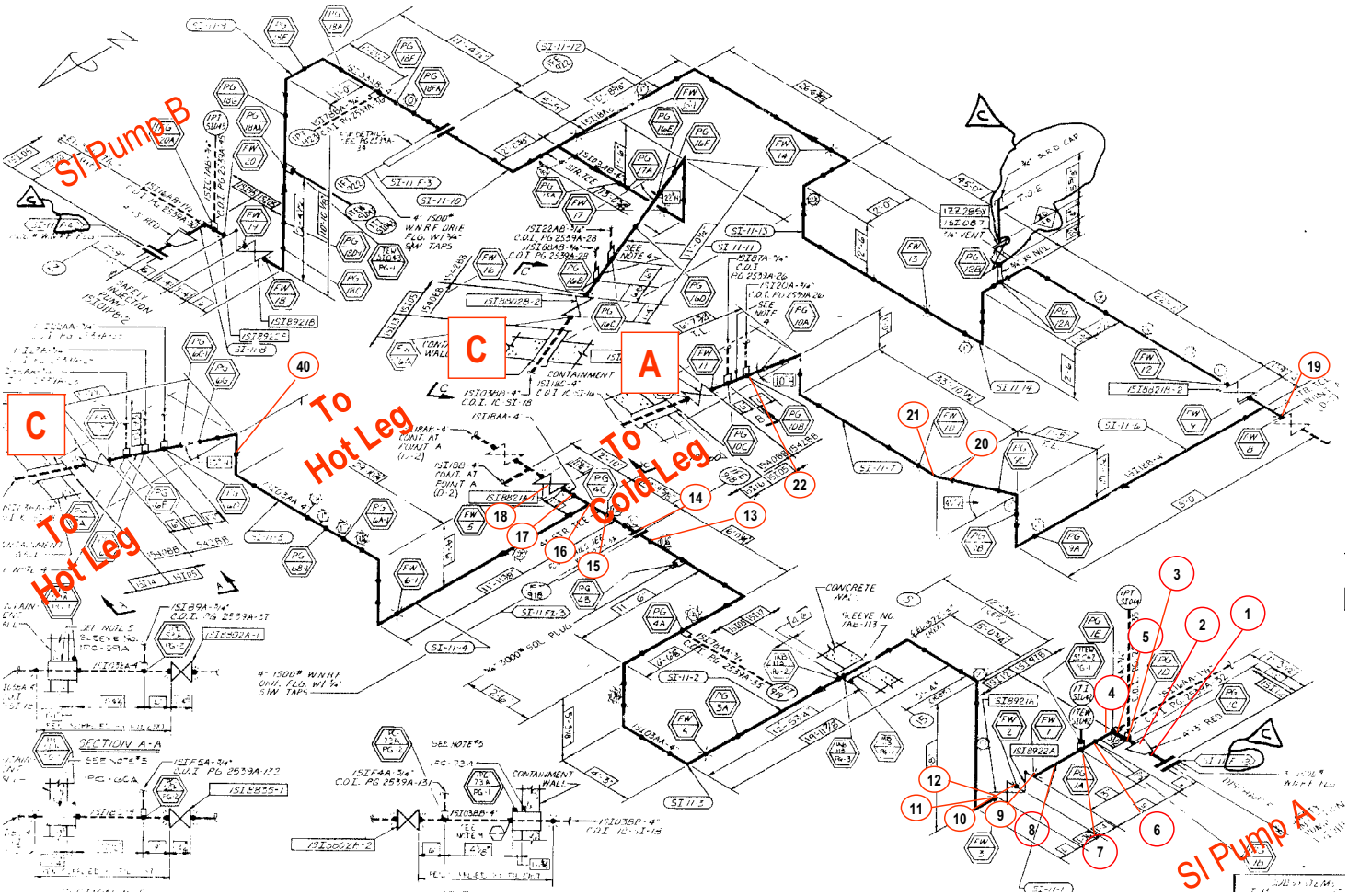

GROUP 23 – SAFETY INJECTION PUMP DISCHARGE (Sheet 2 of 7)
(Covers Worksheets ECCS-SIPMPD – 1 thru 53)

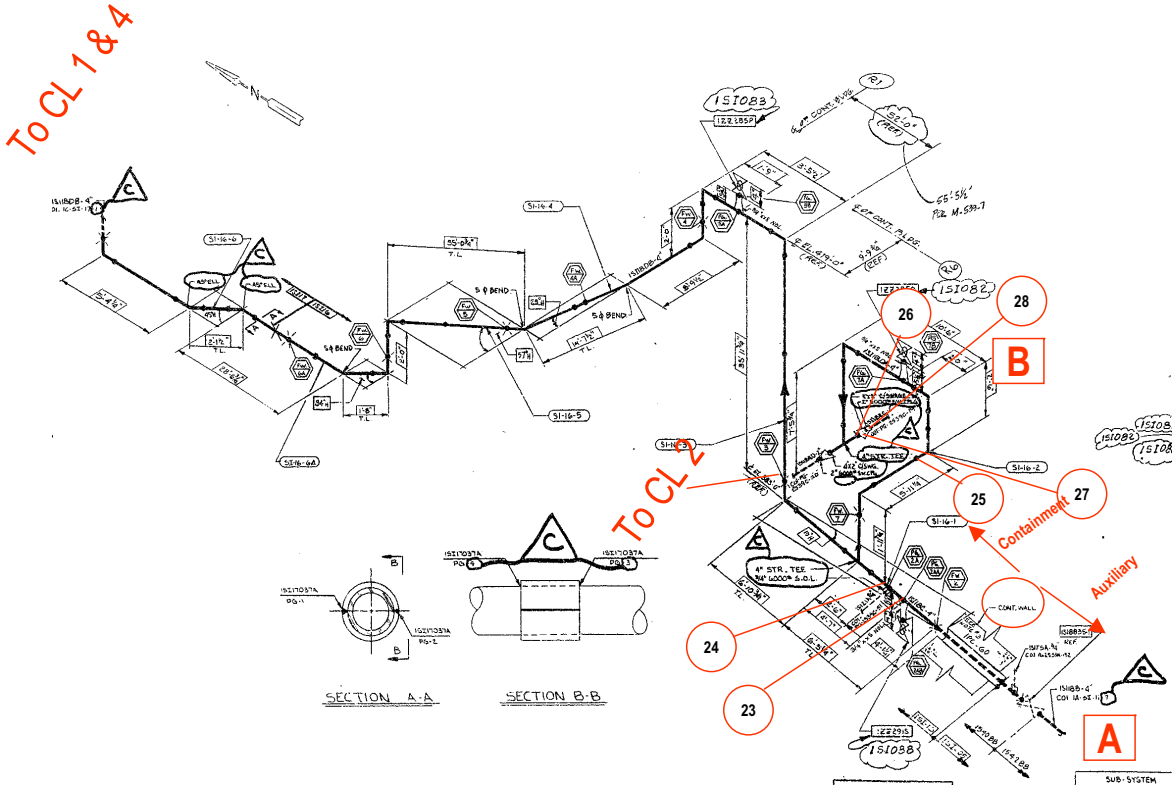

GROUP 23 –SAFETY INJECTION PUMP DISCHARGE (Sheet 3 of 7)
(Covers Worksheets ECCS-SIPMPD – 1 thru 53)

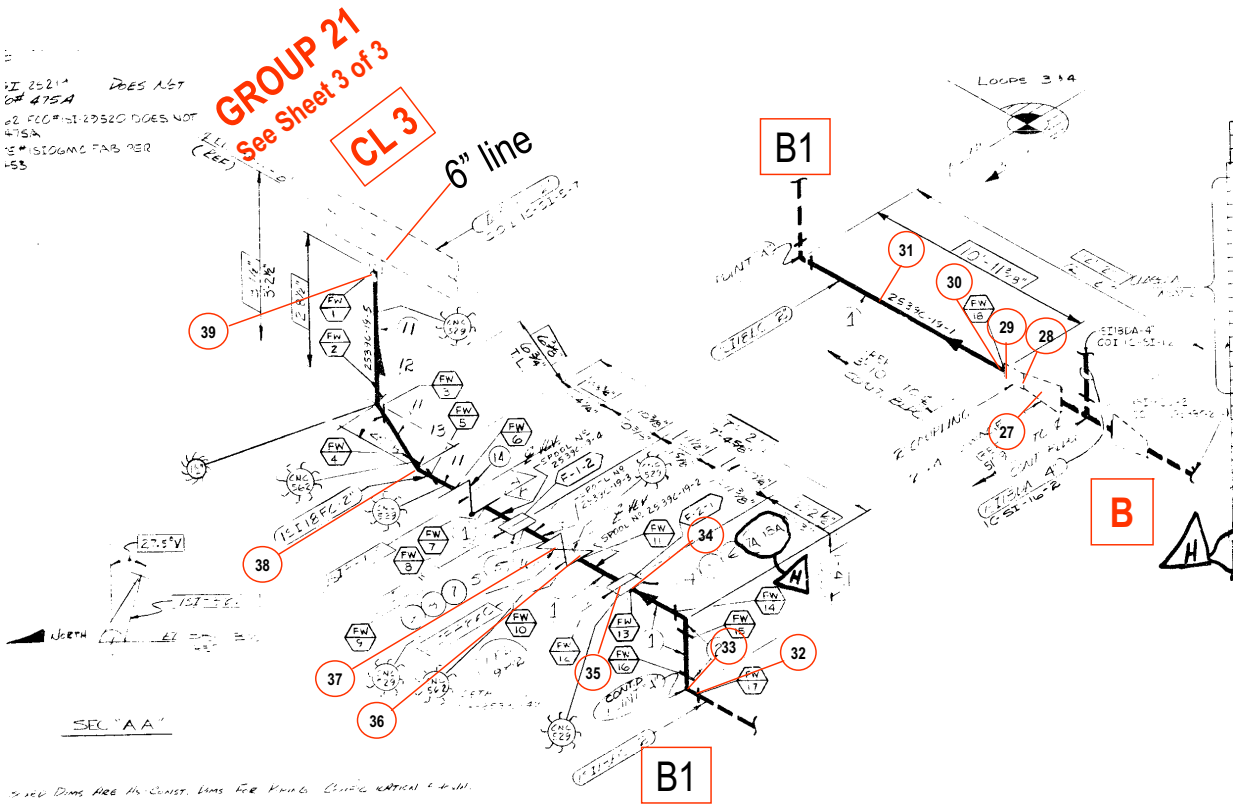

GROUP 23 –SAFETY INJECTION PUMP DISCHARGE (Sheet 4 of 7)
(Covers Worksheets ECCS-SIPMPD – 1 thru 53)

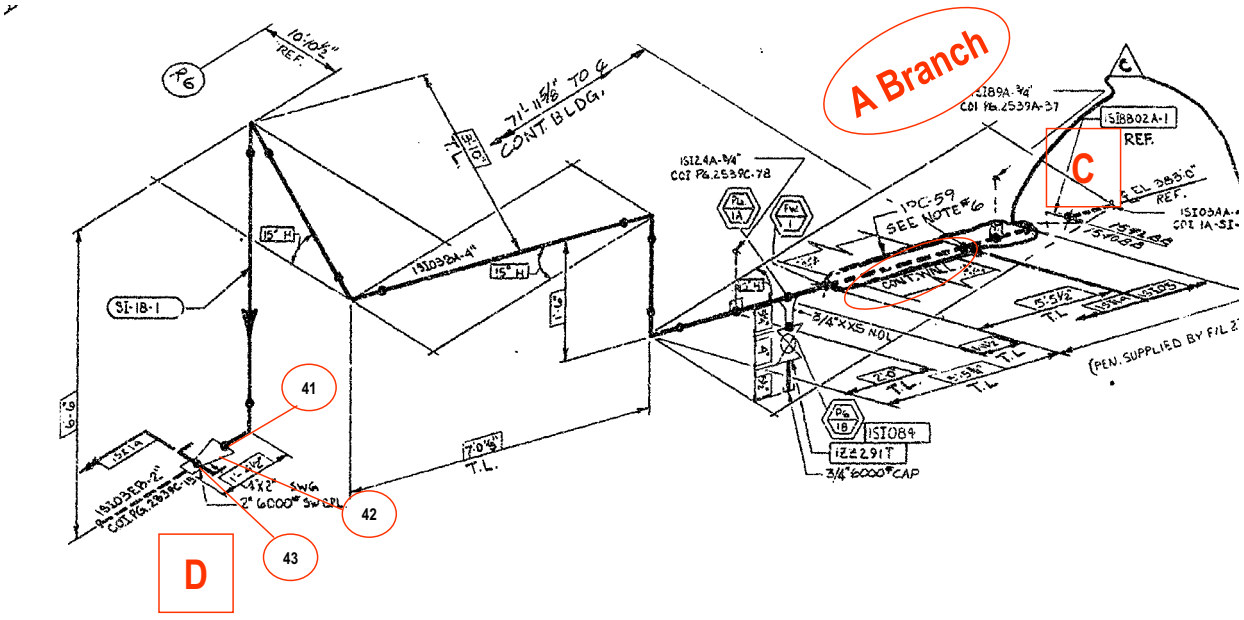

GROUP 23 –SAFETY INJECTION PUMP DISCHARGE (Sheet 5 of 7)
(Covers Worksheets ECCS-SIPMPD – 1 thru 53)

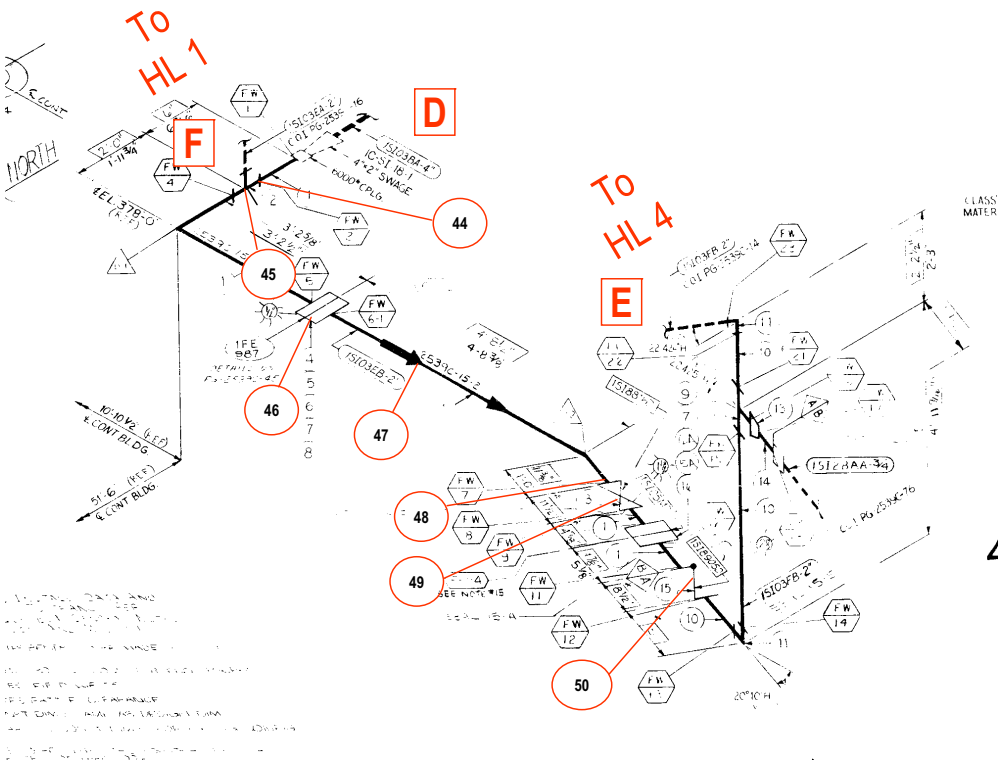

GROUP 23 –SAFETY INJECTION PUMP DISCHARGE (Sheet 6 of 7)
(Covers Worksheets ECCS-SIPMPD – 1 thru 53)

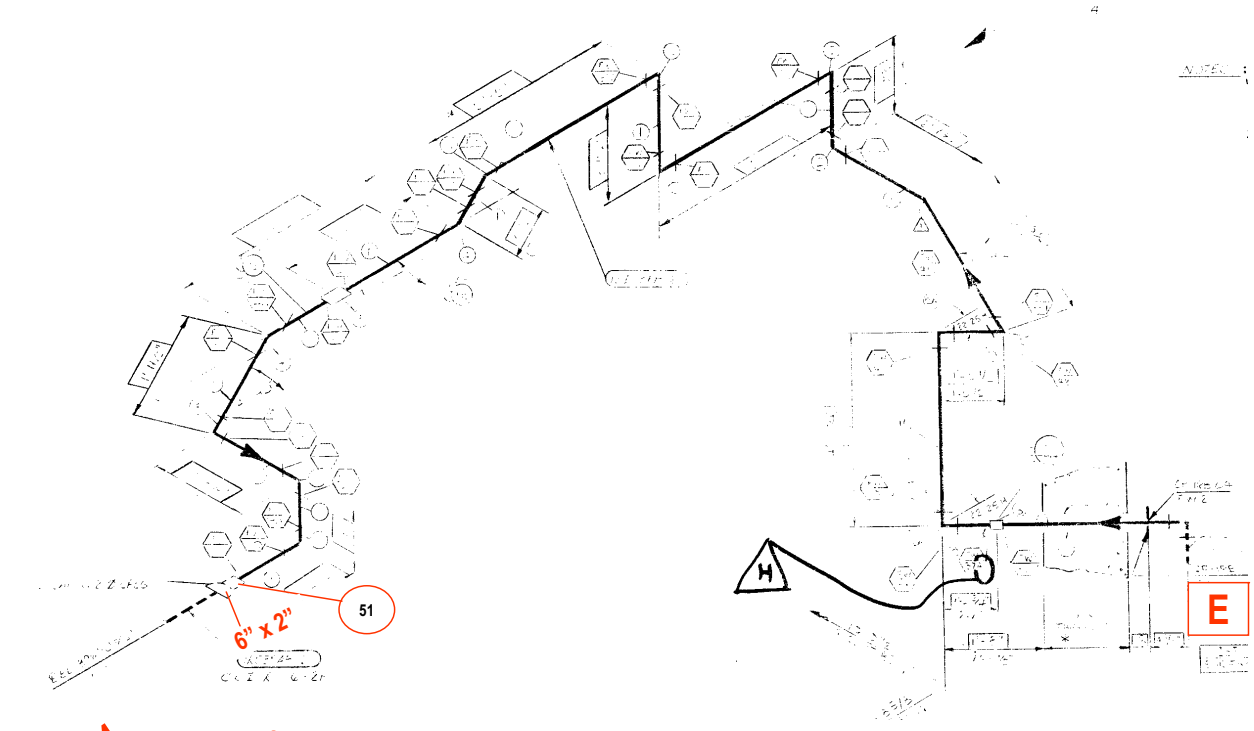

To HL 4

Group 19
(see Sheet 3 of 4)

GROUP 23 –SAFETY INJECTION PUMP DISCHARGE (Sheet 7 of 7)
(Covers Worksheets ECCS-SIPMPD – 1 thru 53)

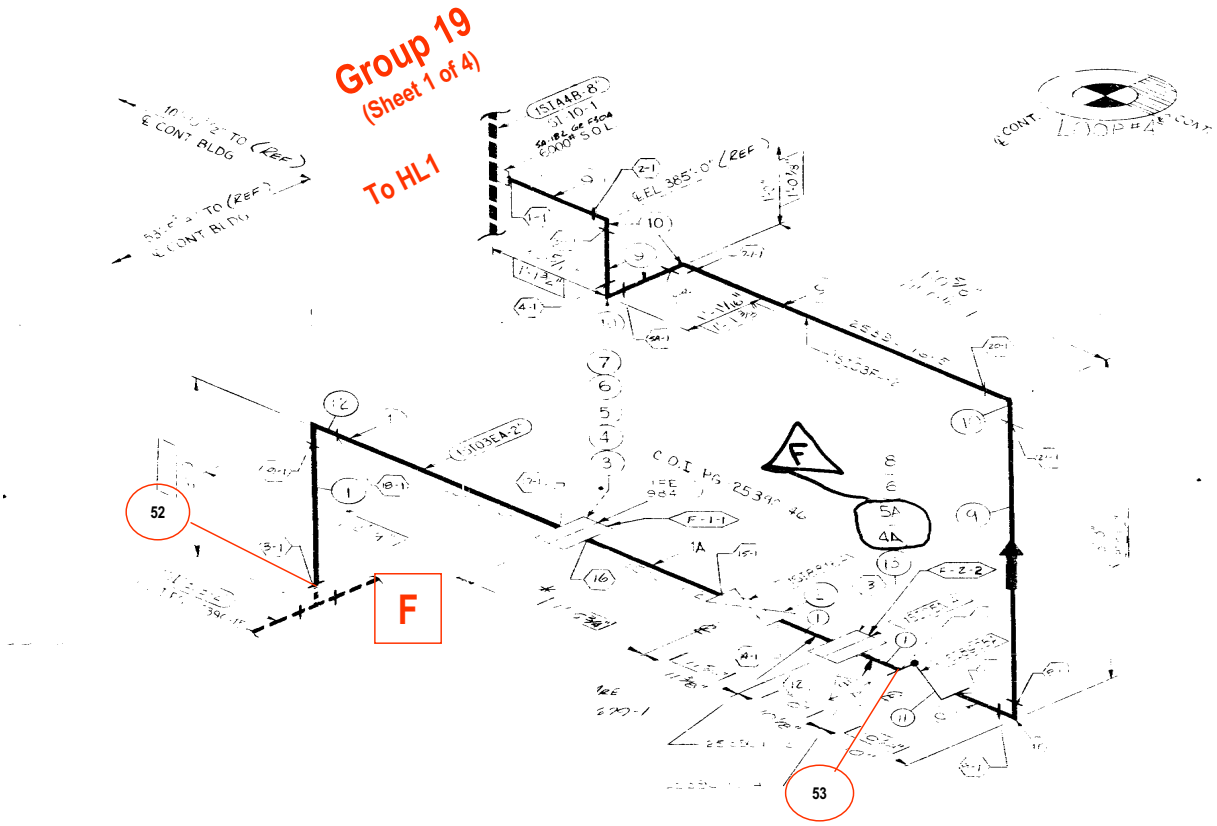

GROUP 24 – MAIN STEAM (Sheet 1 of 3)
(Covers Worksheets PCS-MS – 1 thru 89)

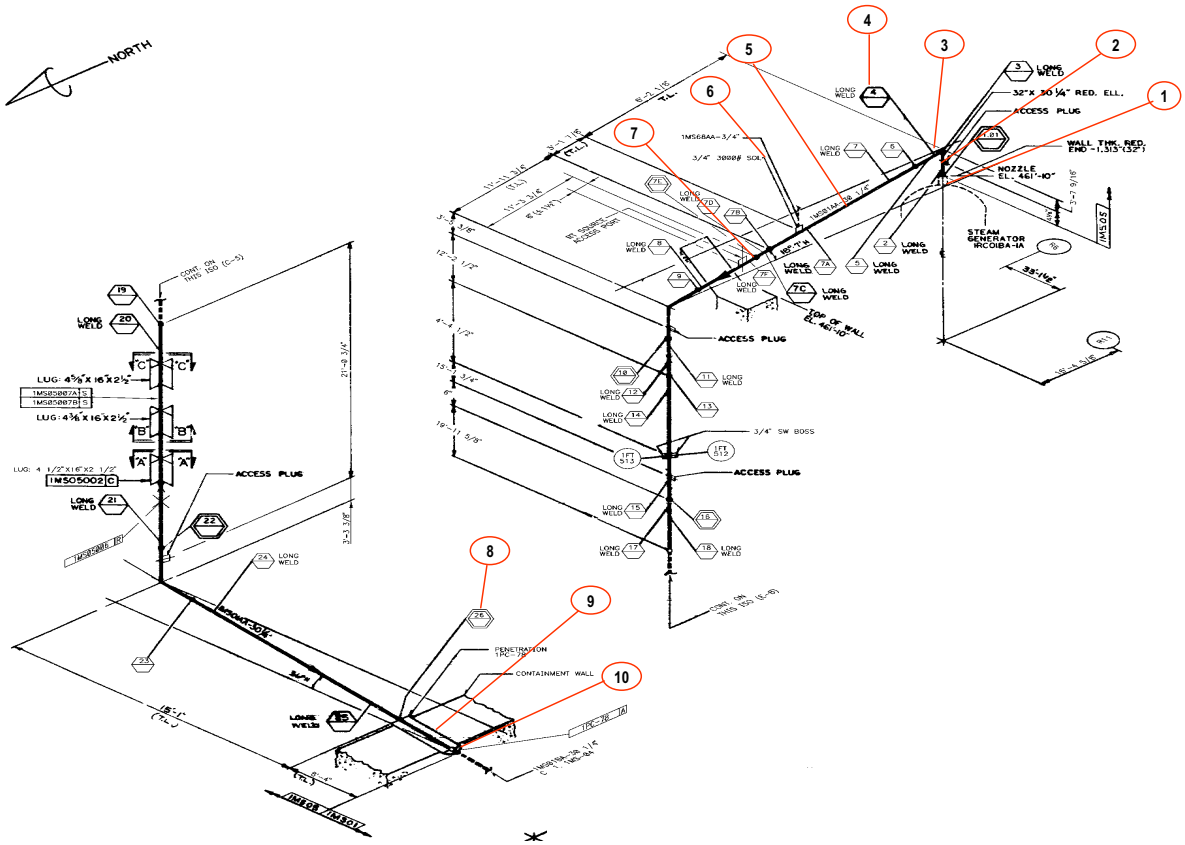

GROUP 24 – MAIN STEAM (Sheet 2 of 3)
(Covers Worksheets PCS-MS – 1 thru 89)

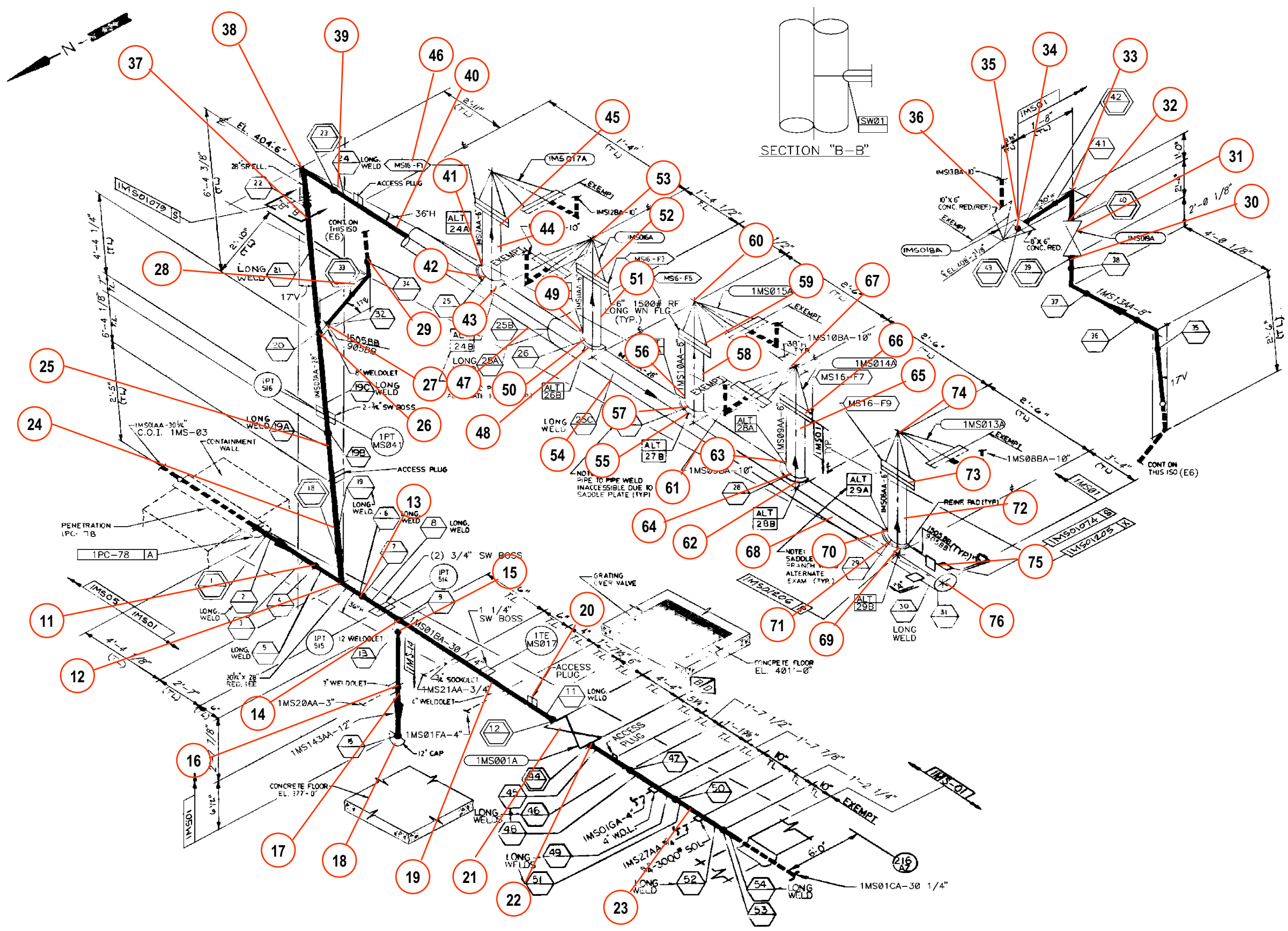

GROUP 24 – MAIN STEAM (Sheet 3 of 3)
(Covers Worksheets PCS-MS – 1 thru 89)

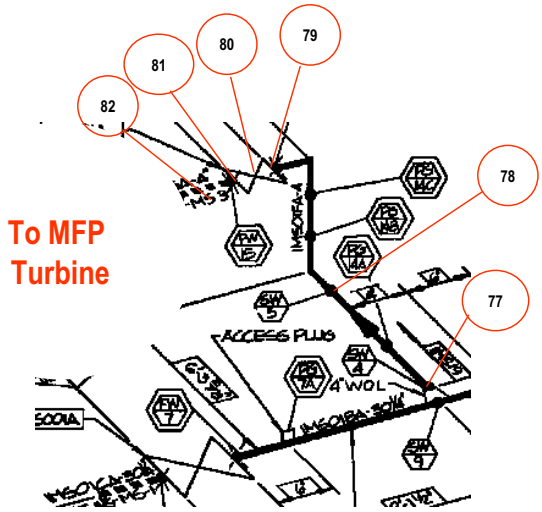

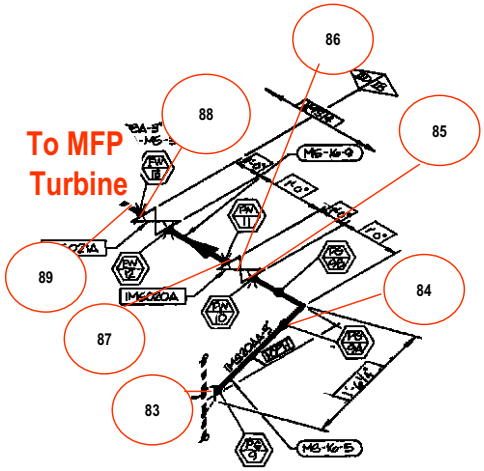

GROUP 25 – MAIN FEEDWATER SYSTEM (Sheet 1 of 3)
(Covers Worksheets PCS-MFW – 1 thru 56)

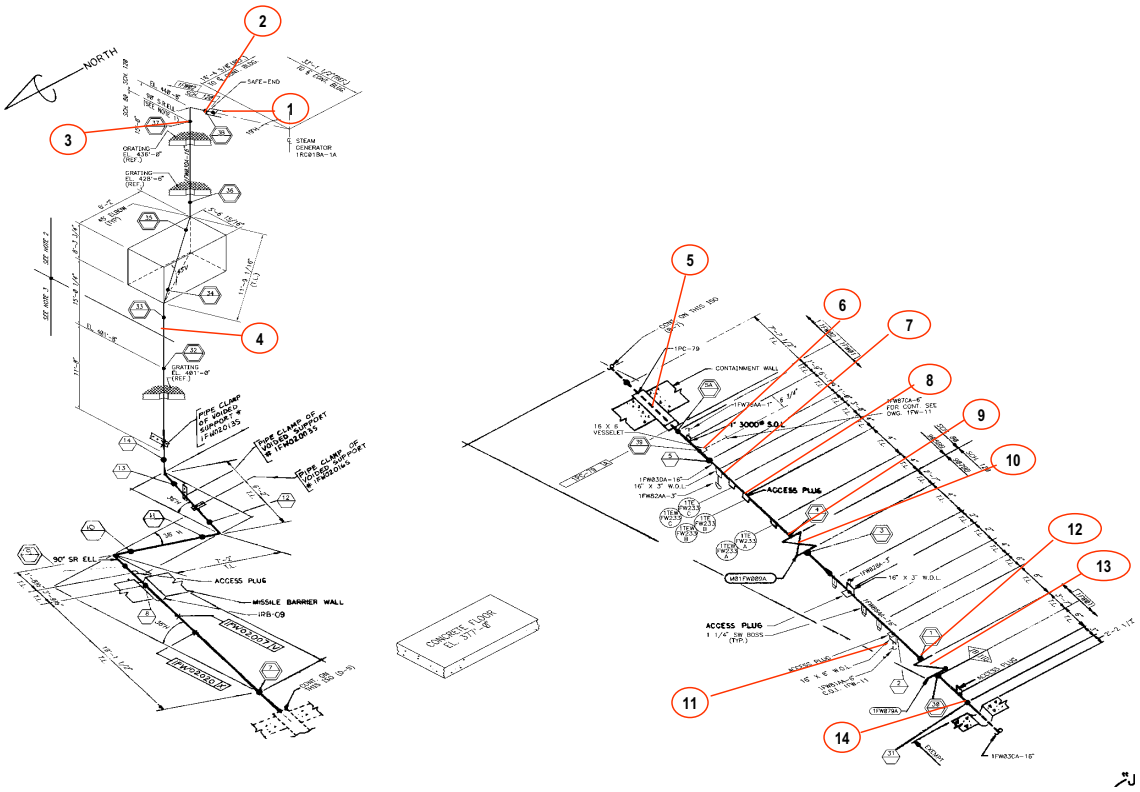

GROUP 25 – MAIN FEEDWATER SYSTEM (Sheet 2 of 3)
(Covers Worksheets PCS-MFW – 1 thru 56)

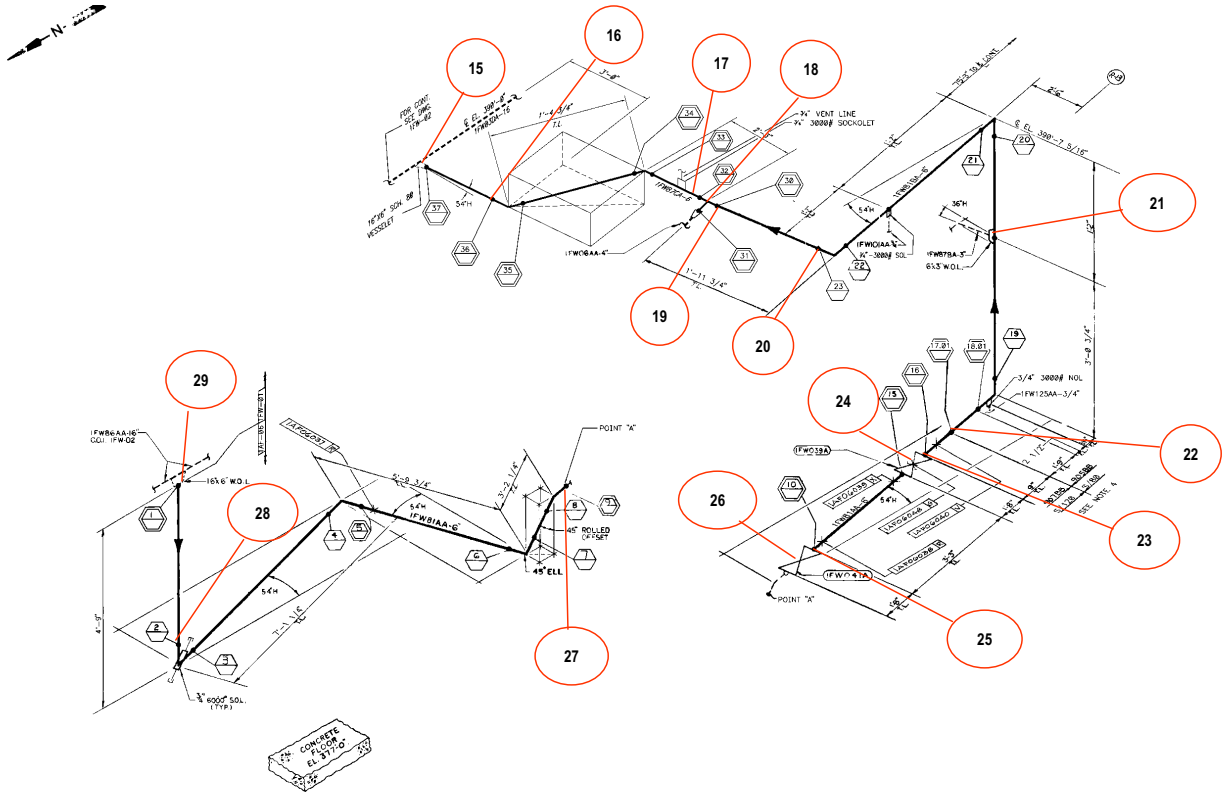

GROUP 25 – MAIN FEEDWATER SYSTEM (Sheet 3 of 3)
(Covers Worksheets PCS-MFW – 1 thru 56)

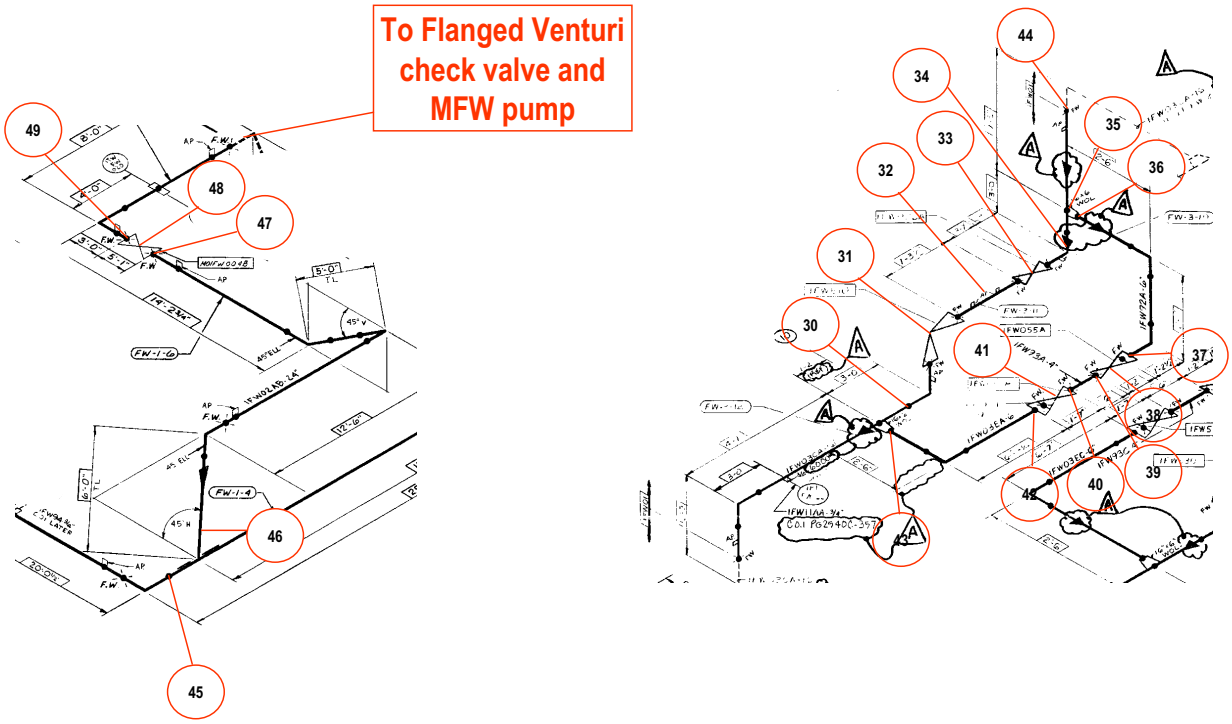

GROUP 26 – AUXILIARY FEEDWATER SYSTEM (Sheet 1 of 6)
(Covers Worksheets PCS-AFW – 1 thru 45)

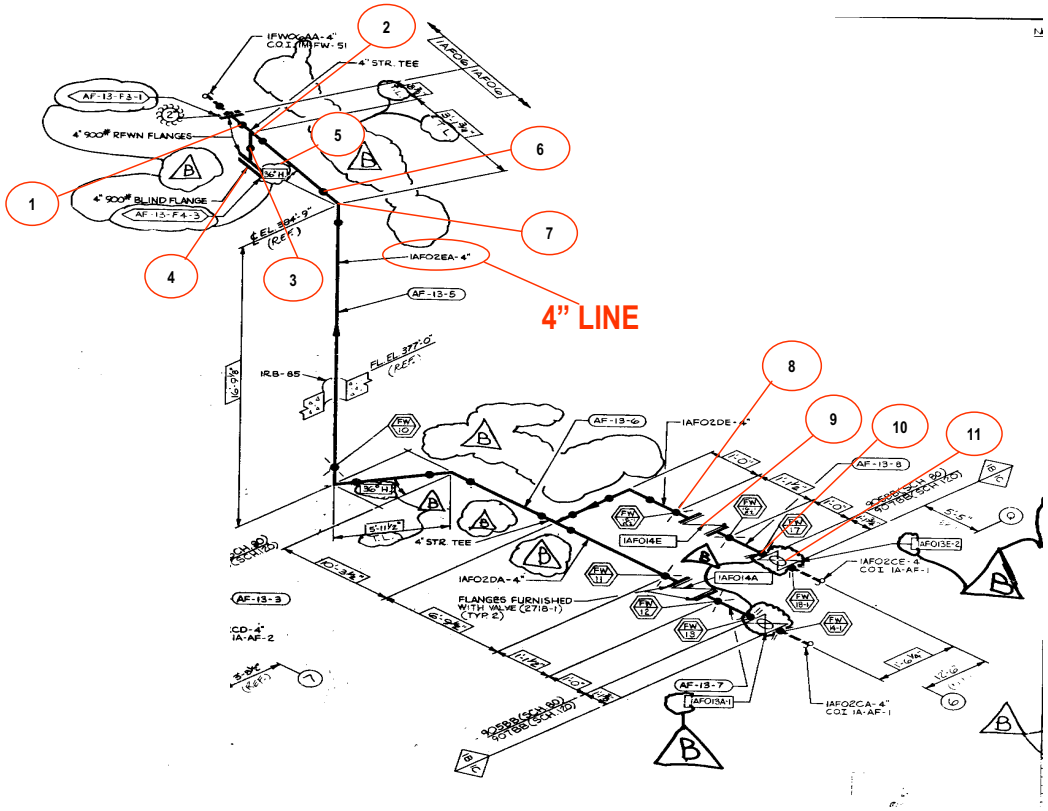

GROUP 26 – AUXILIARY FEEDWATER SYSTEM (Sheet 2 of 6)
(Covers Worksheets PCS-AFW – 1 thru 45)

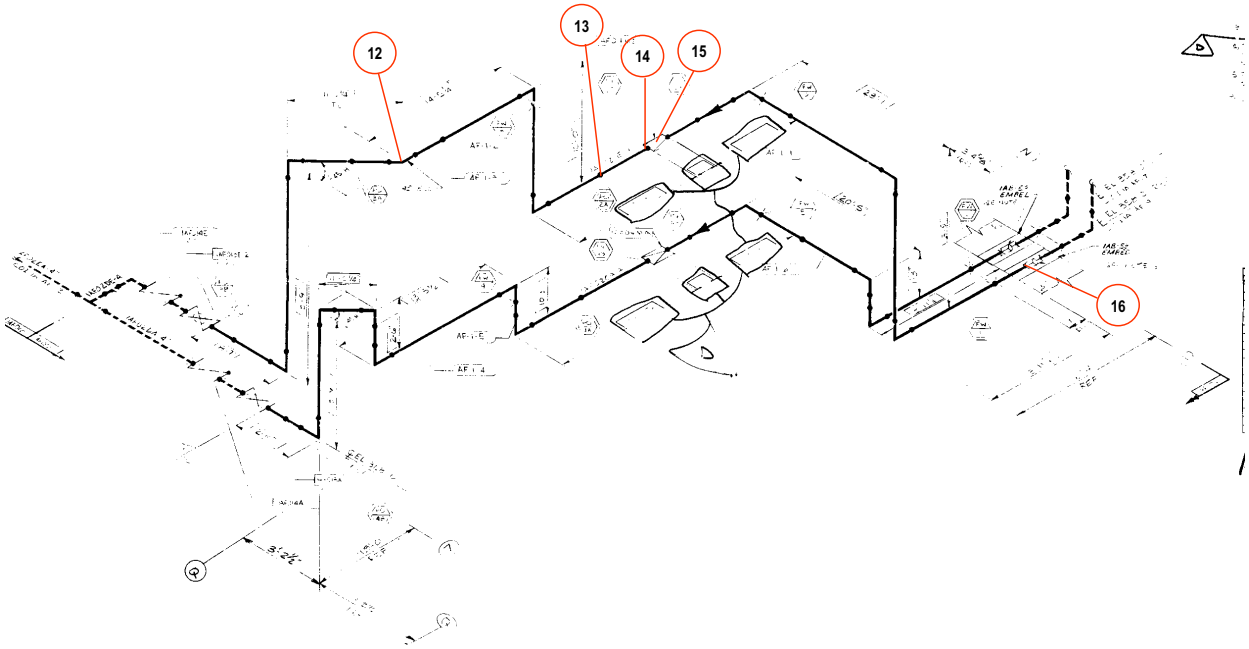

GROUP 26 – AUXILIARY FEEDWATER SYSTEM (Sheet 3 of 6)
(Covers Worksheets PCS-AFW – 1 thru 45)

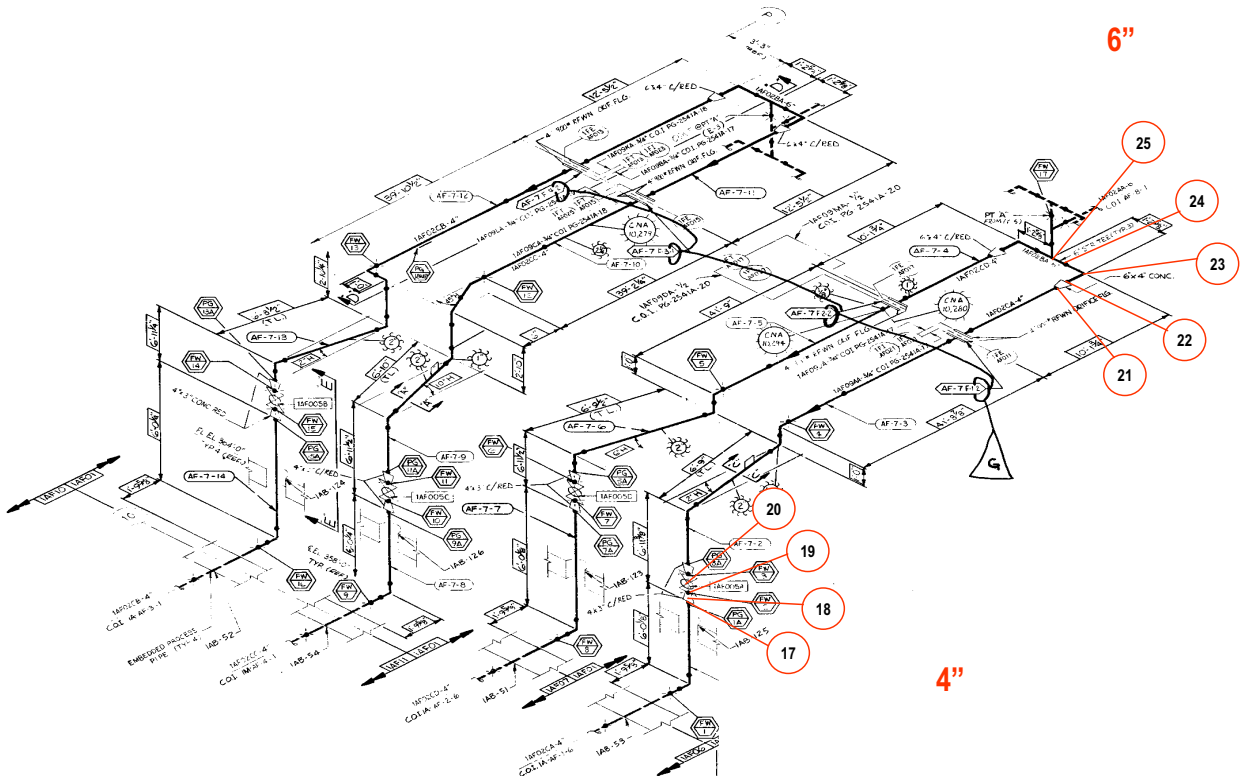

GROUP 26 – AUXILIARY FEEDWATER SYSTEM (Sheet 4 of 6)
(Covers Worksheets PCS-AFW – 1 thru 45)

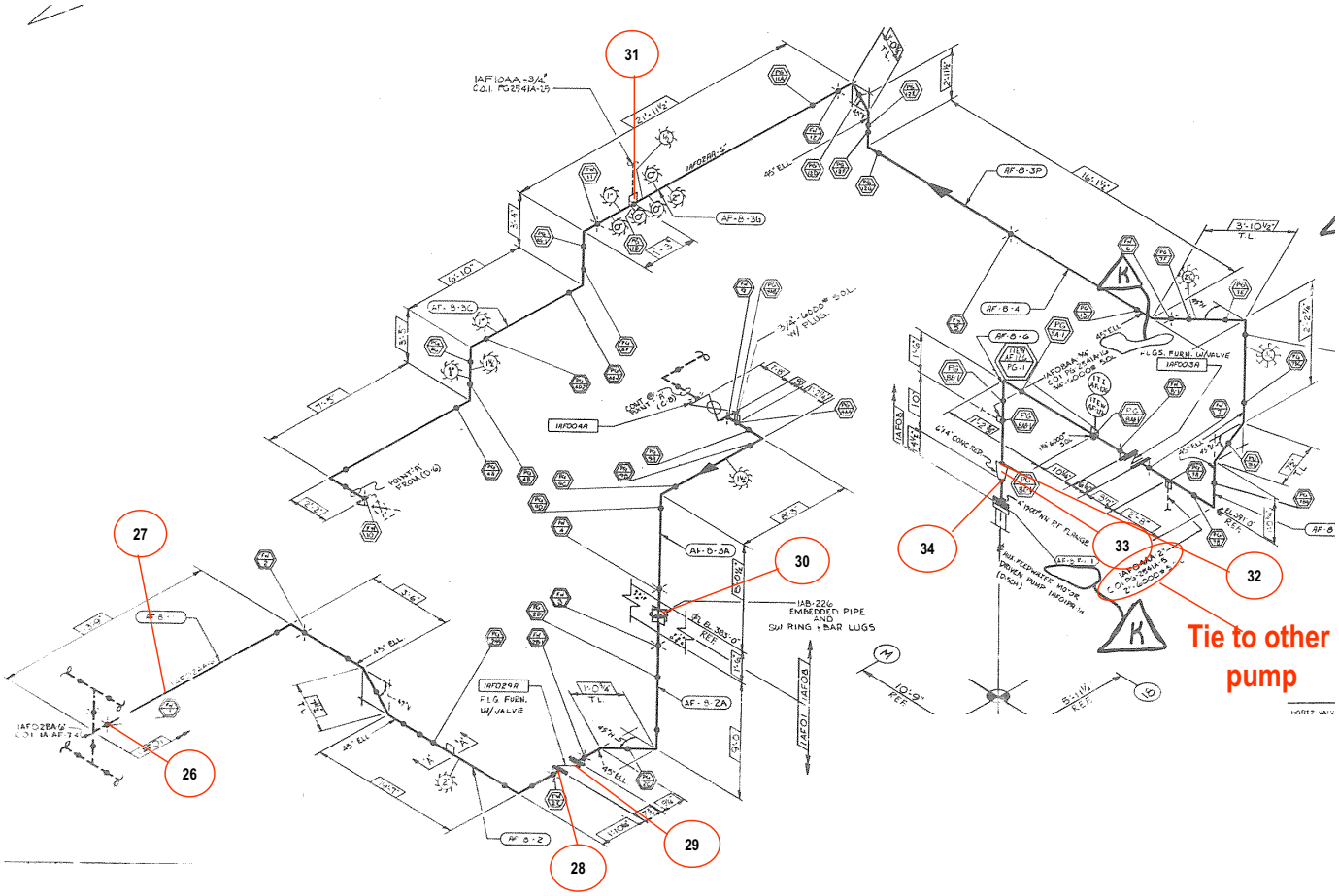

GROUP 26 – AUXILIARY FEEDWATER SYSTEM (Sheet 5 of 6)
(Covers Worksheets PCS-AFW – 1 thru 45)

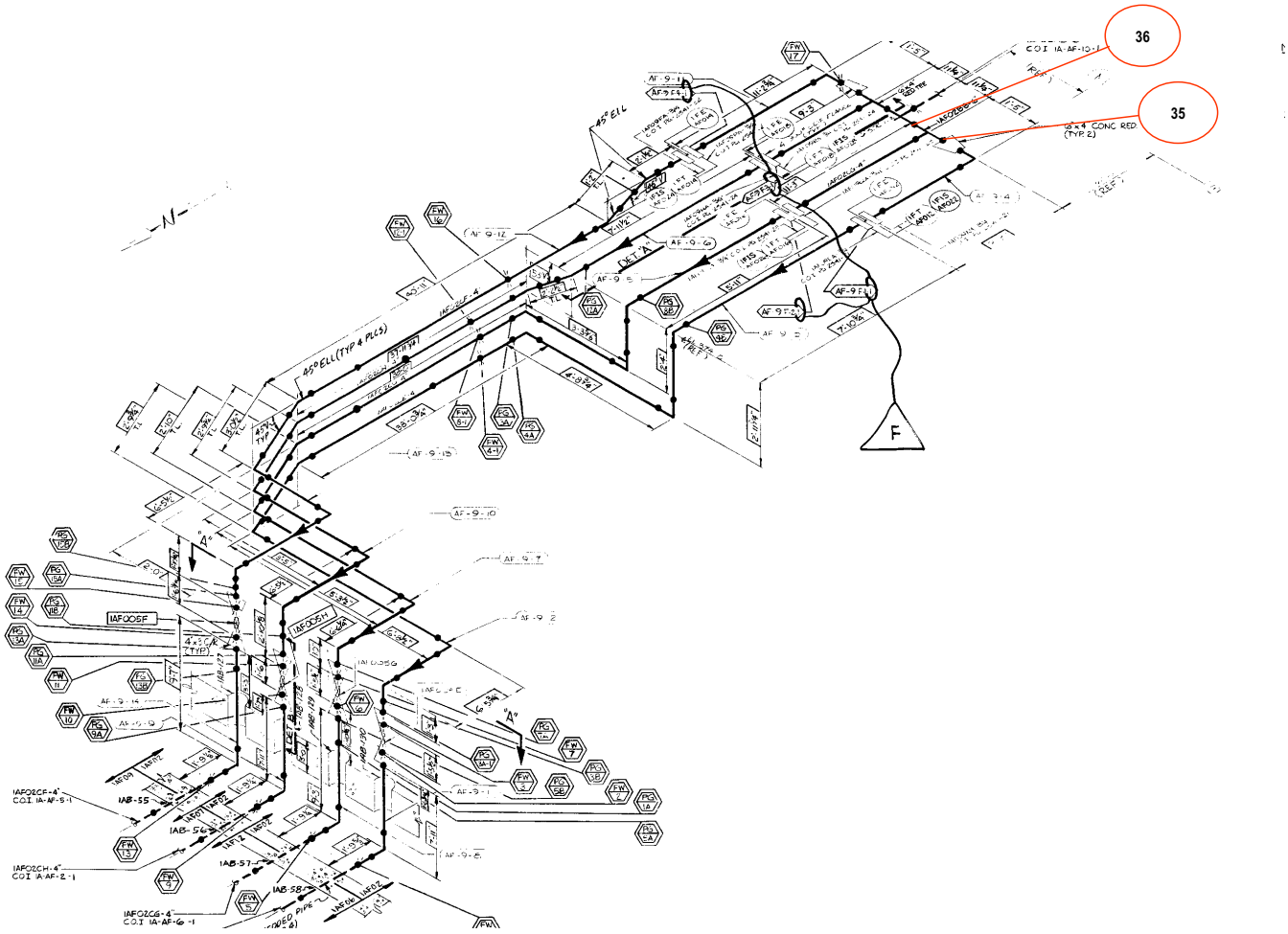

GROUP 26 – AUXILIARY FEEDWATER SYSTEM (Sheet 6 of 6)
(Covers Worksheets PCS-AFW – 1 thru 45)

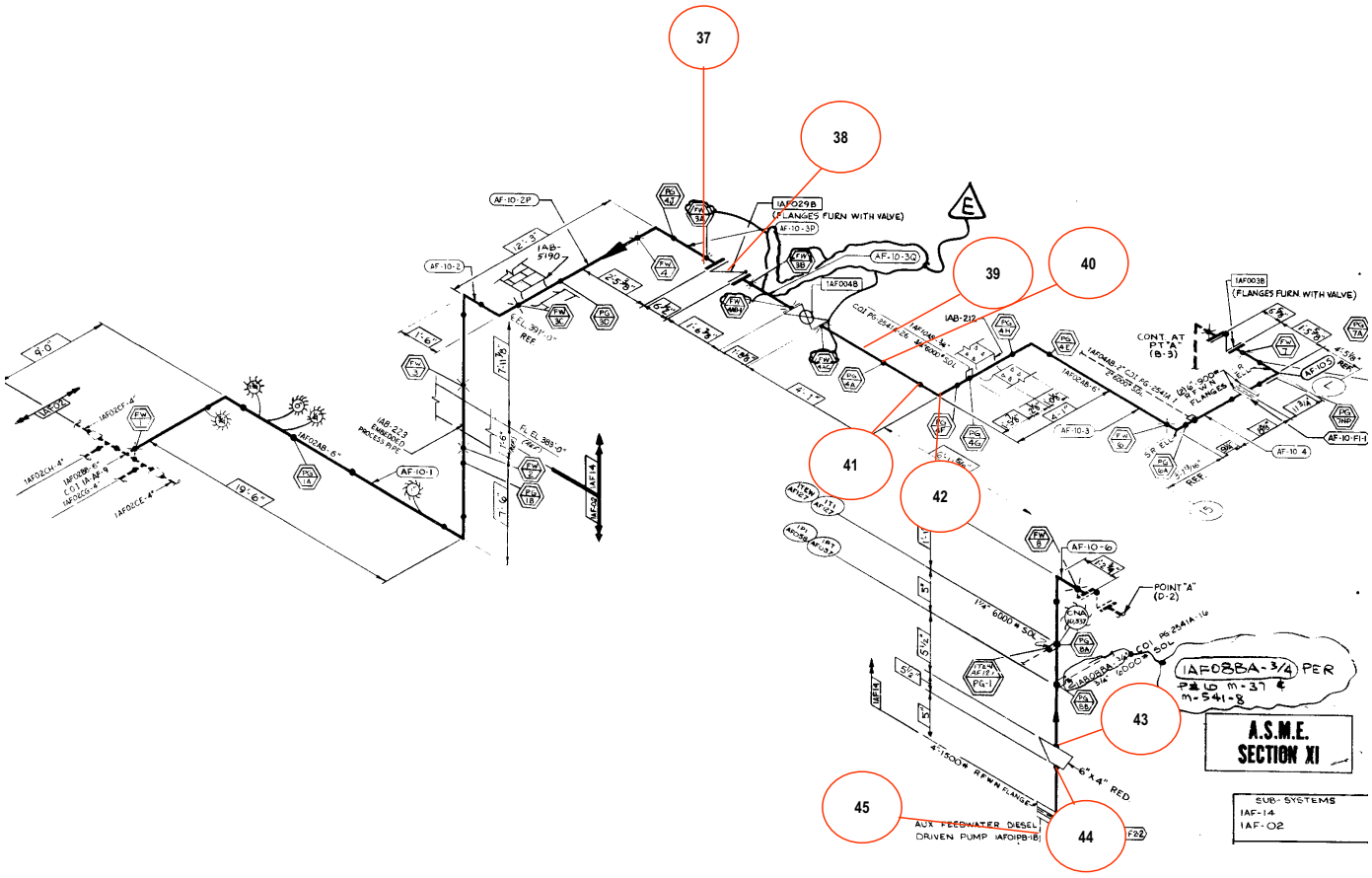

GROUP 27 – STEAM GENERATOR BLOWDOWN (Sheet 1 of 5)
(Covers Worksheets PCS-SGBD – 1 thru 55)

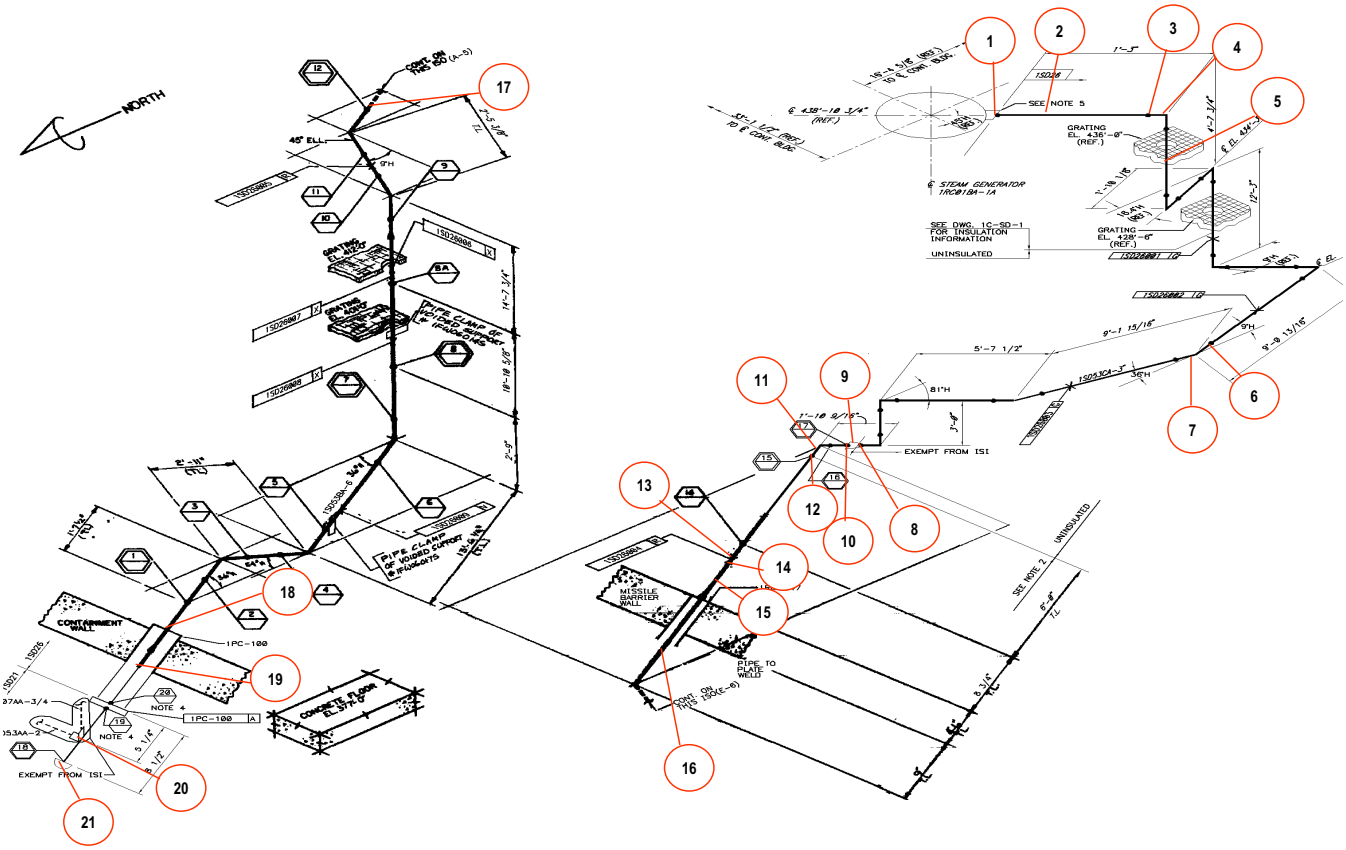

GROUP 27 – STEAM GENERATOR BLOWDOWN (Sheet 2 of 5)
(Covers Worksheets PCS-SGBD – 1 thru 55)

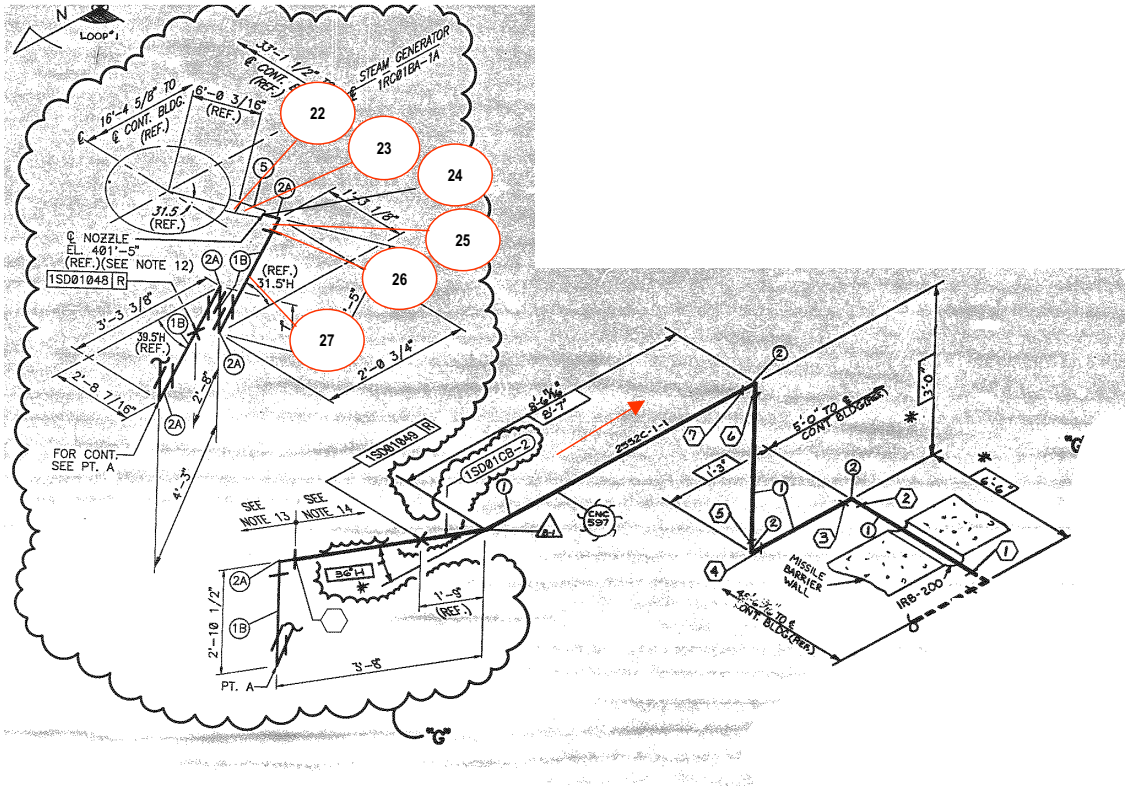

GROUP 27 – STEAM GENERATOR BLOWDOWN (Sheet 3 of 5)
(Covers Worksheets PCS-SGBD – 1 thru 55)

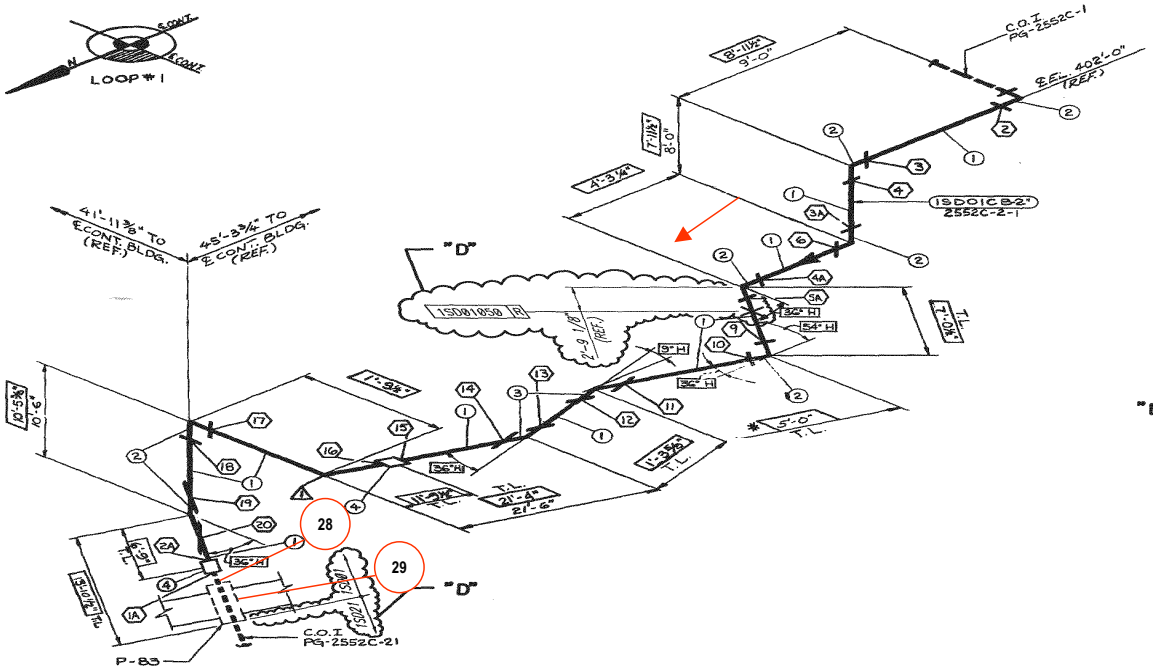

GROUP 27 – STEAM GENERATOR BLOWDOWN (Sheet 4 of 5)
(Covers Worksheets PCS-SGBD – 1 thru 55)

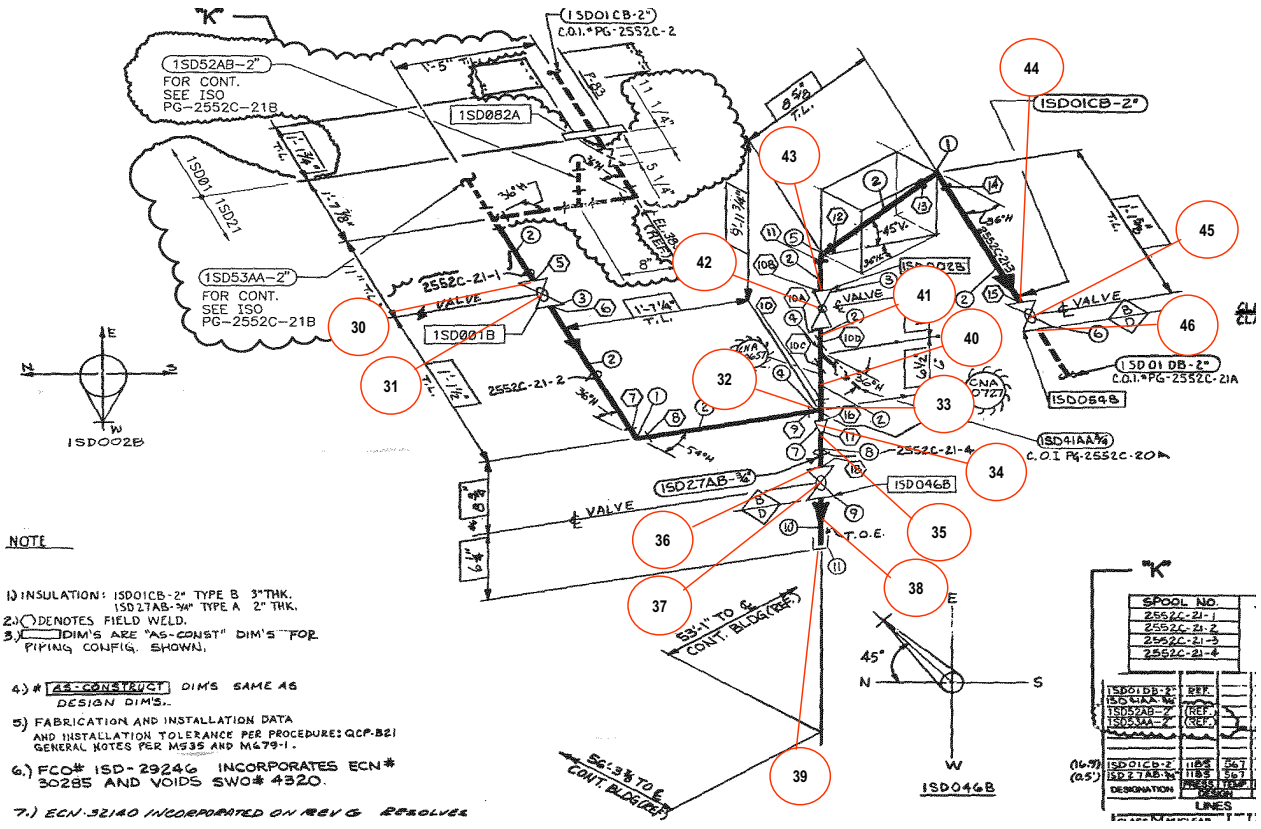

GROUP 27 – STEAM GENERATOR BLOWDOWN (Sheet 5 of 5)
(Covers Worksheets PCS-SGBD – 1 thru 55)

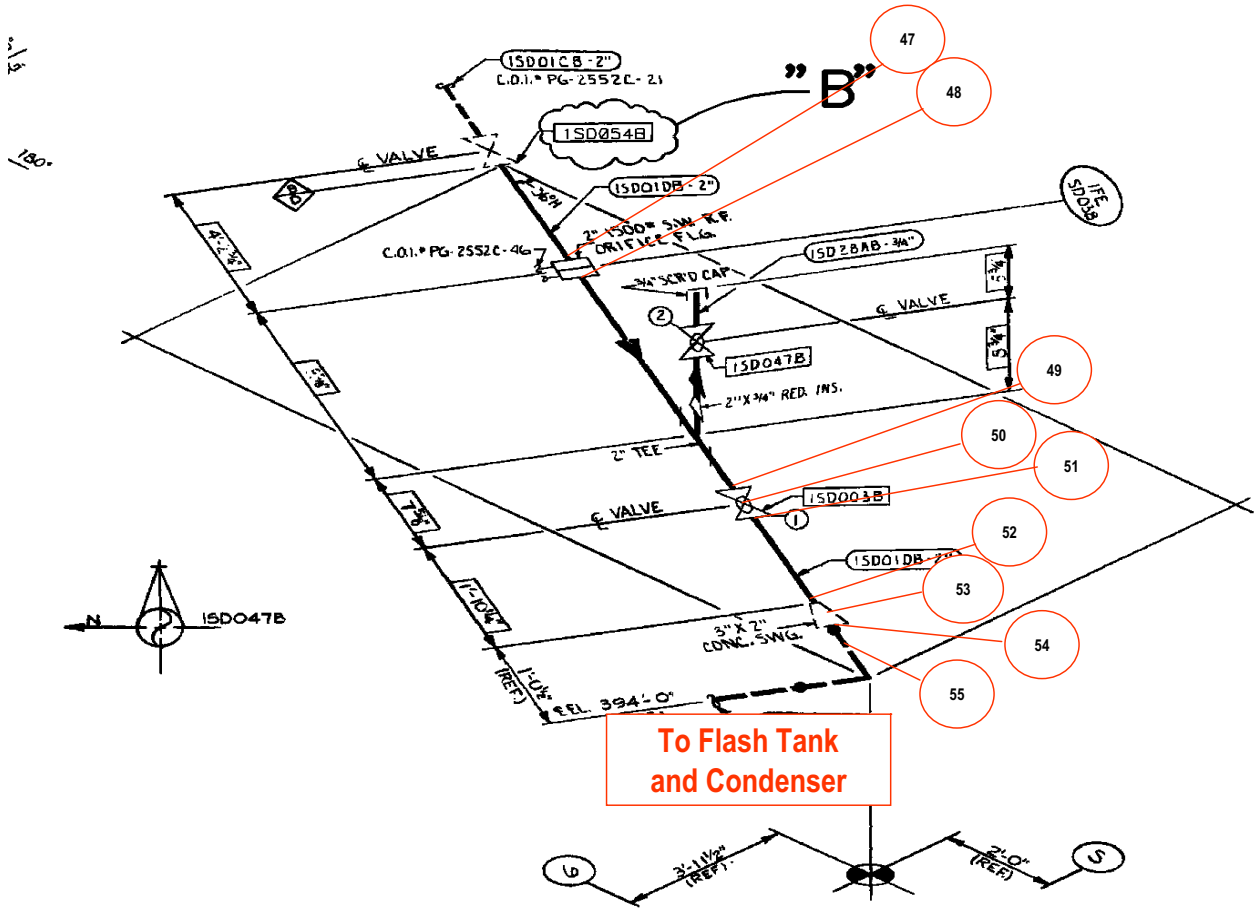

GROUP 28 – SERVICE WATER SUCTION FROM POND (Sheet 1 of 4)
(Covers Worksheets SS-SWSUC – 1 thru 49)

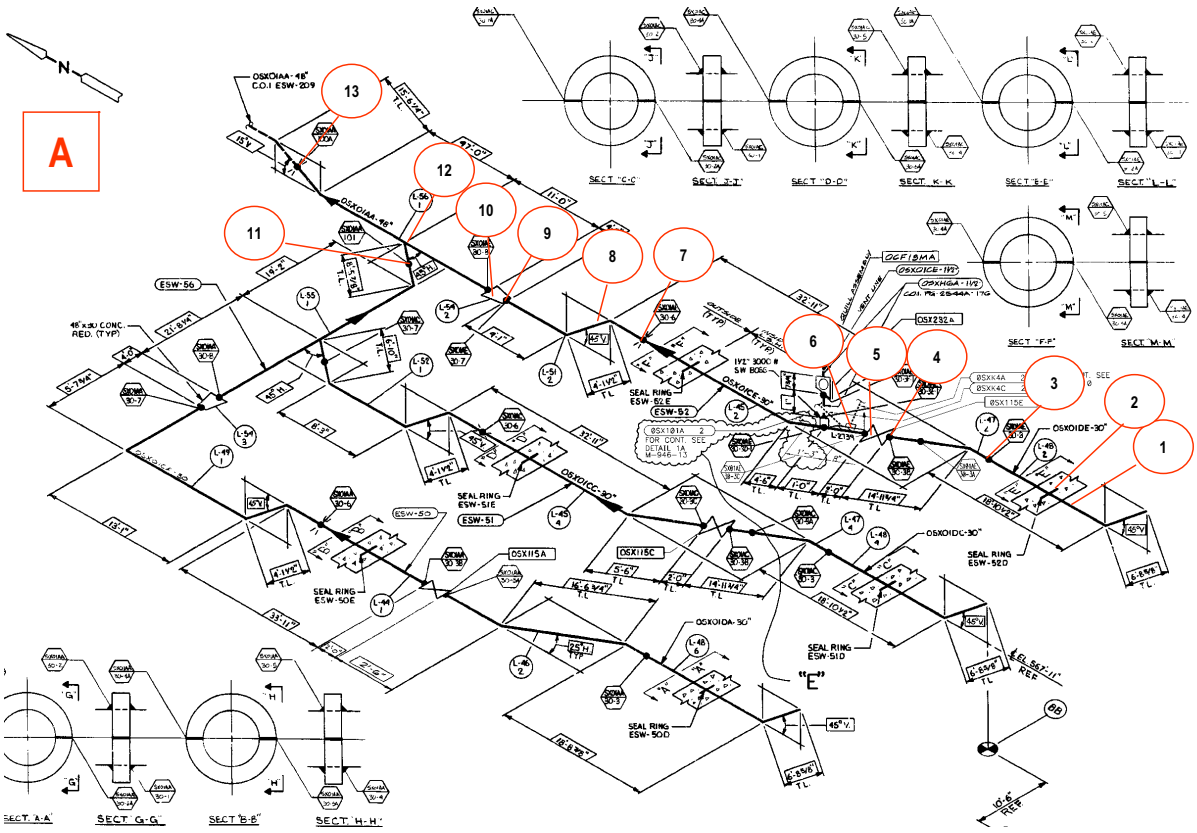

GROUP 28 – SERVICE WATER SUCTION FROM POND (Sheet 2 of 4)
(Covers Worksheets SS-SWSUC – 1 thru 49)

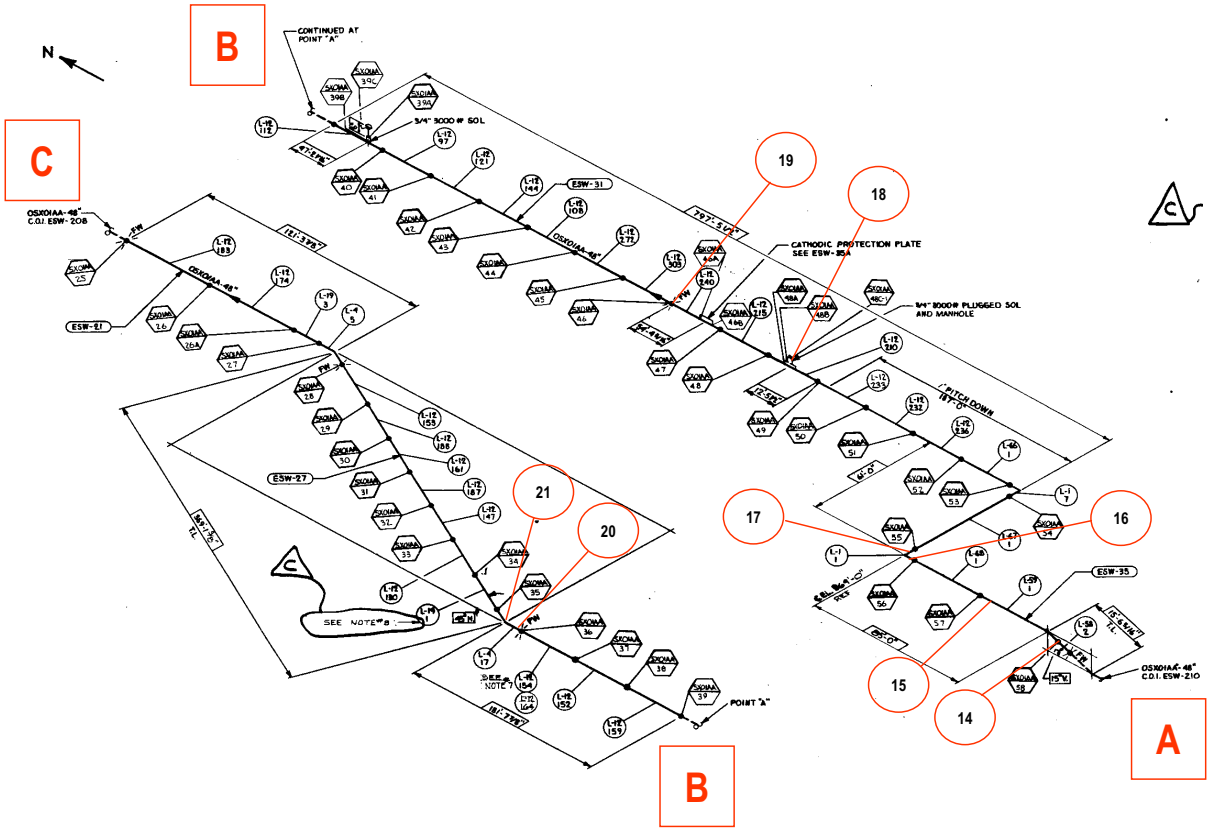

GROUP 28 – SERVICE WATER SUCTION FROM POND (Sheet 3 of 4)
(Covers Worksheets SS-SWSUC – 1 thru 49)

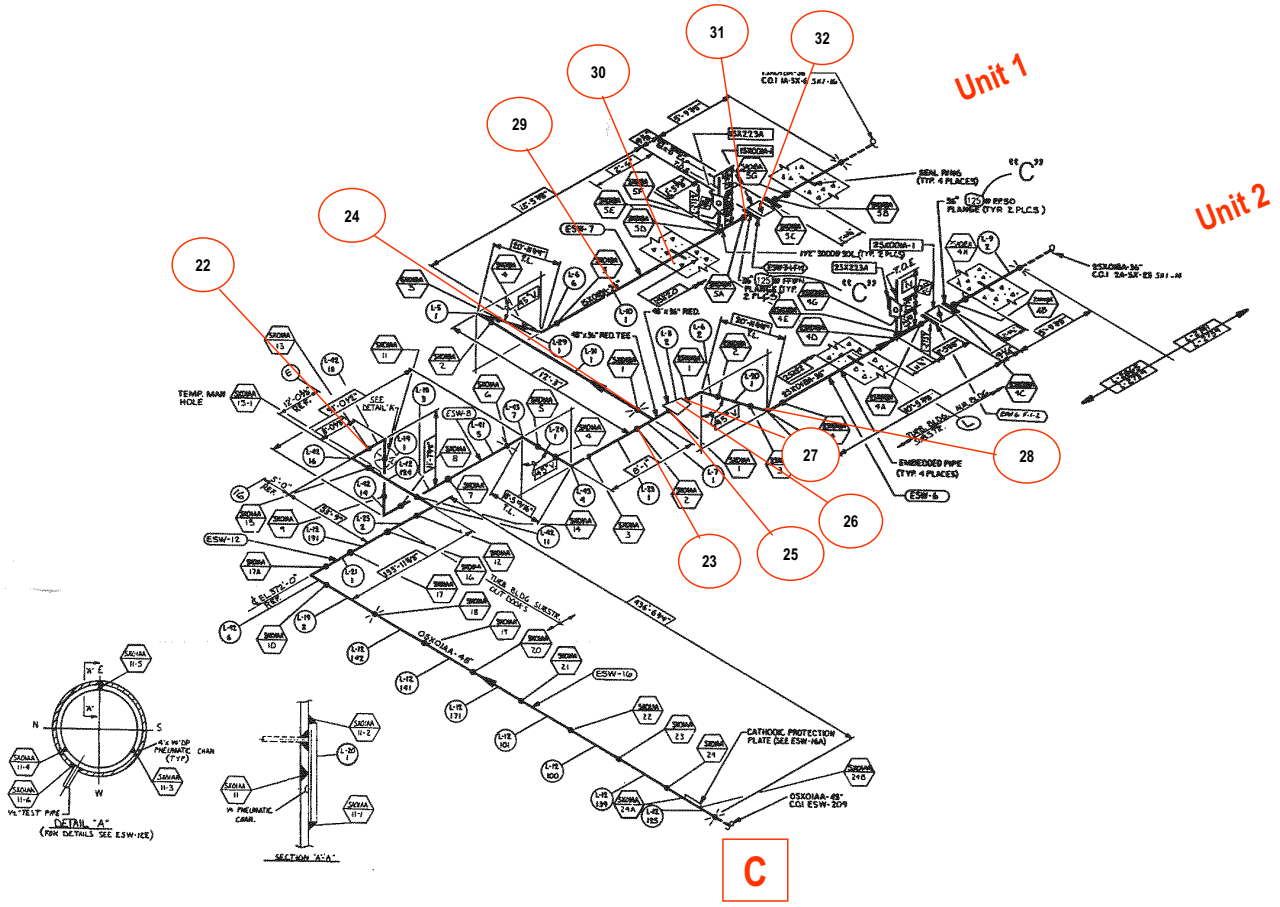

GROUP 28 – SERVICE WATER SUCTION FROM POND (Sheet 4 of 4)
(Covers Worksheets SS-SWSUC – 1 thru 49)

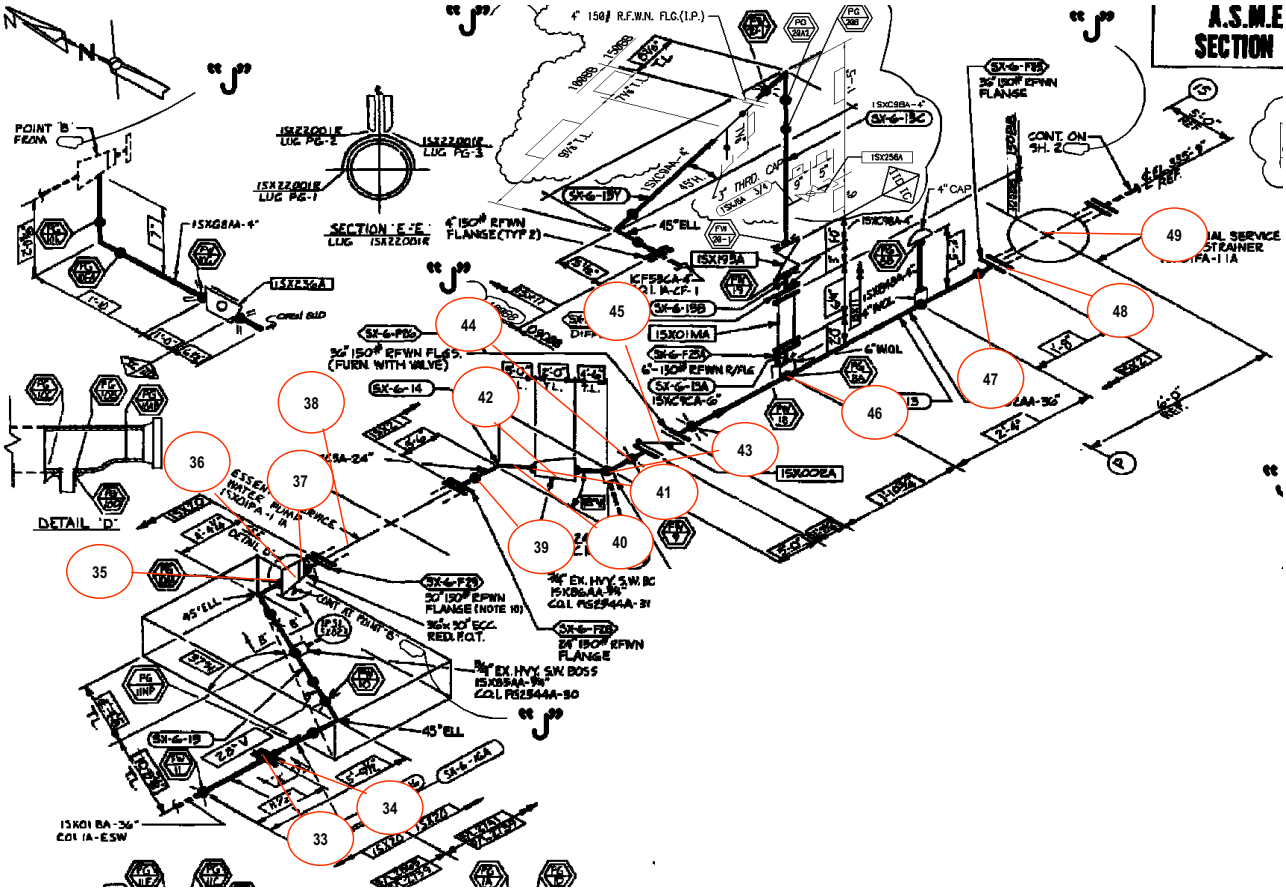

GROUP 29 – SERVICE WATER DISCHARGE TO AUXILIARY AND CONTAINMENT BUILDINGS (Sheet 1 of 2)
(Covers Worksheets SS-SWDIS – 1 thru 70)

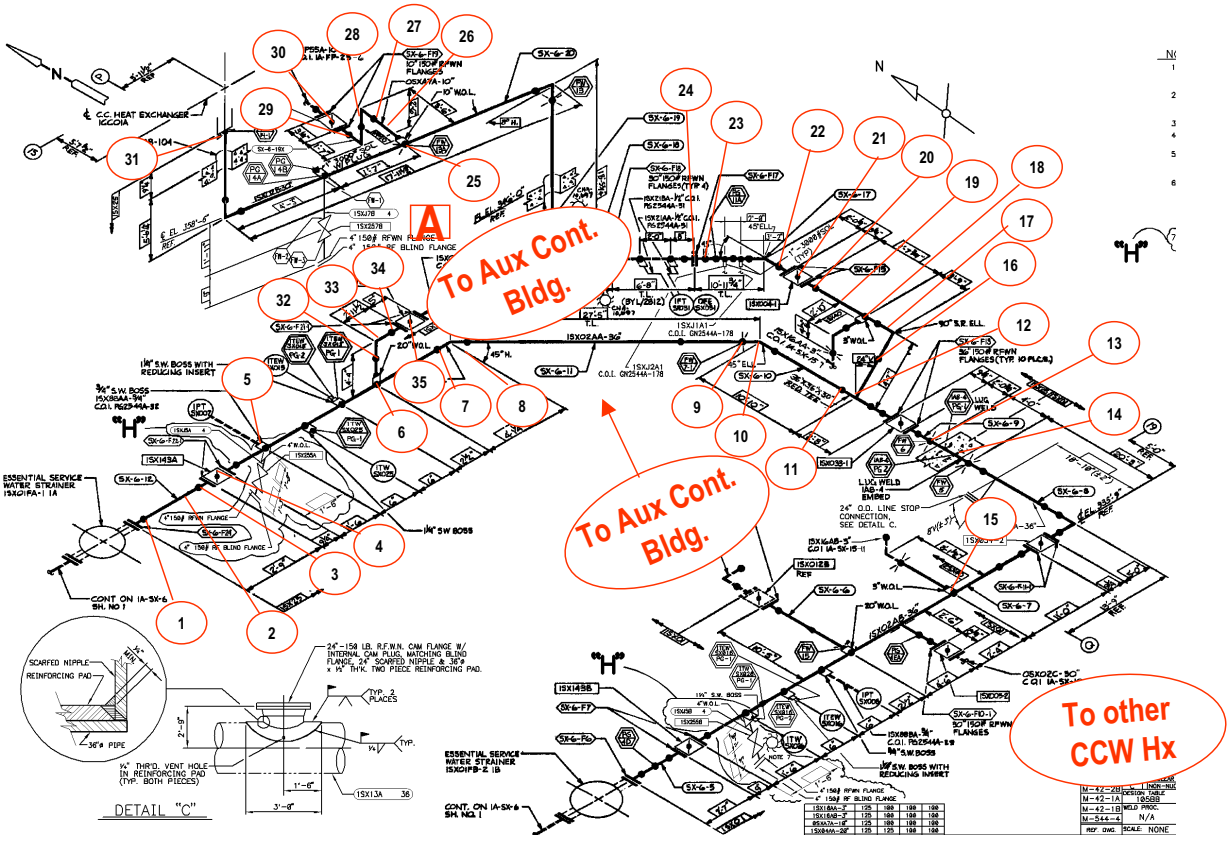

GROUP 29 – SERVICE WATER DISCHARGE TO AUXILIARY AND CONTAINMENT BUILDINGS (Sheet 2 of 2)
(Covers Worksheets SS-SWDIS – 1 thru 70)

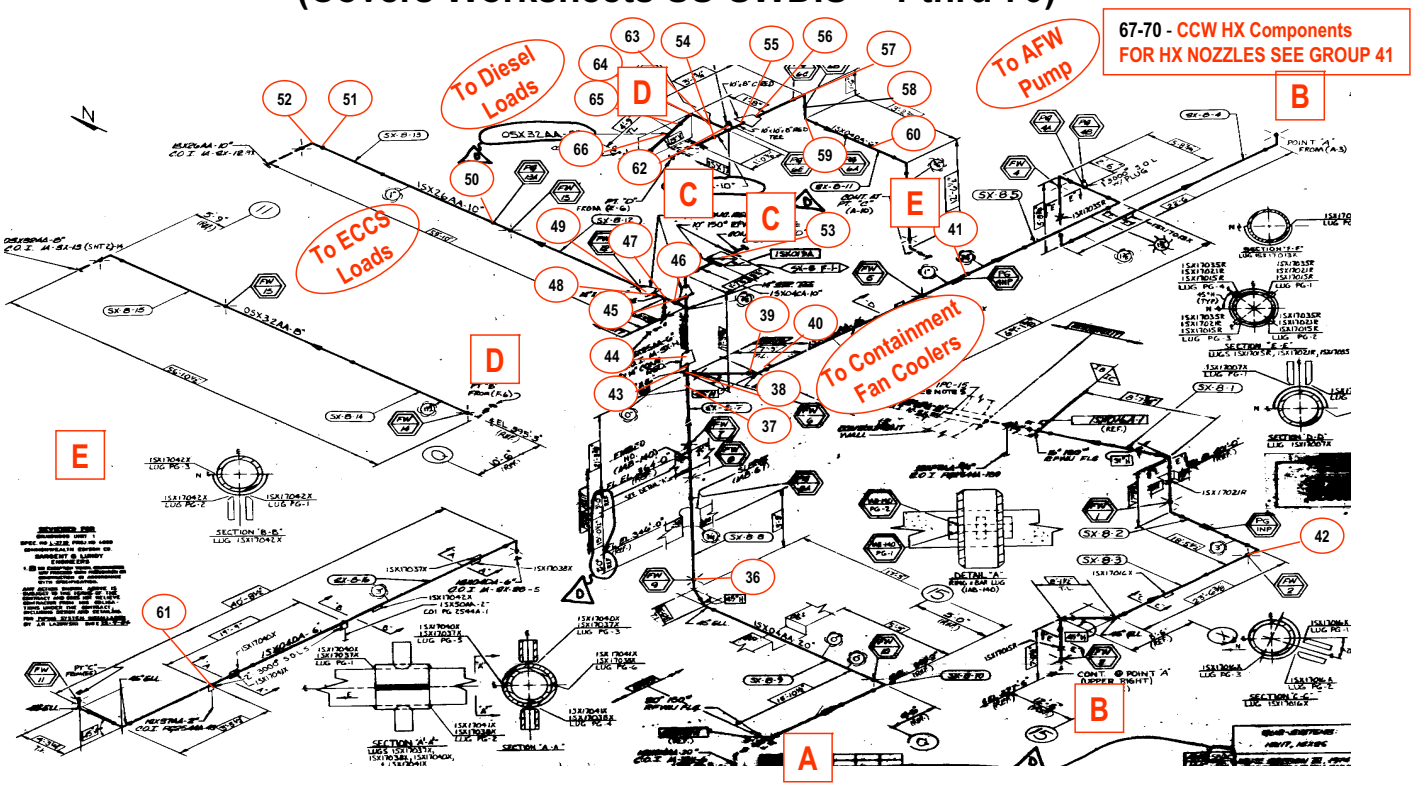

GROUP 30 – SERVICE WATER INSIDE CONTAINMENT (Sheet 1 of 4)
(Covers Worksheets SS-SWCONT – 1 thru 56)

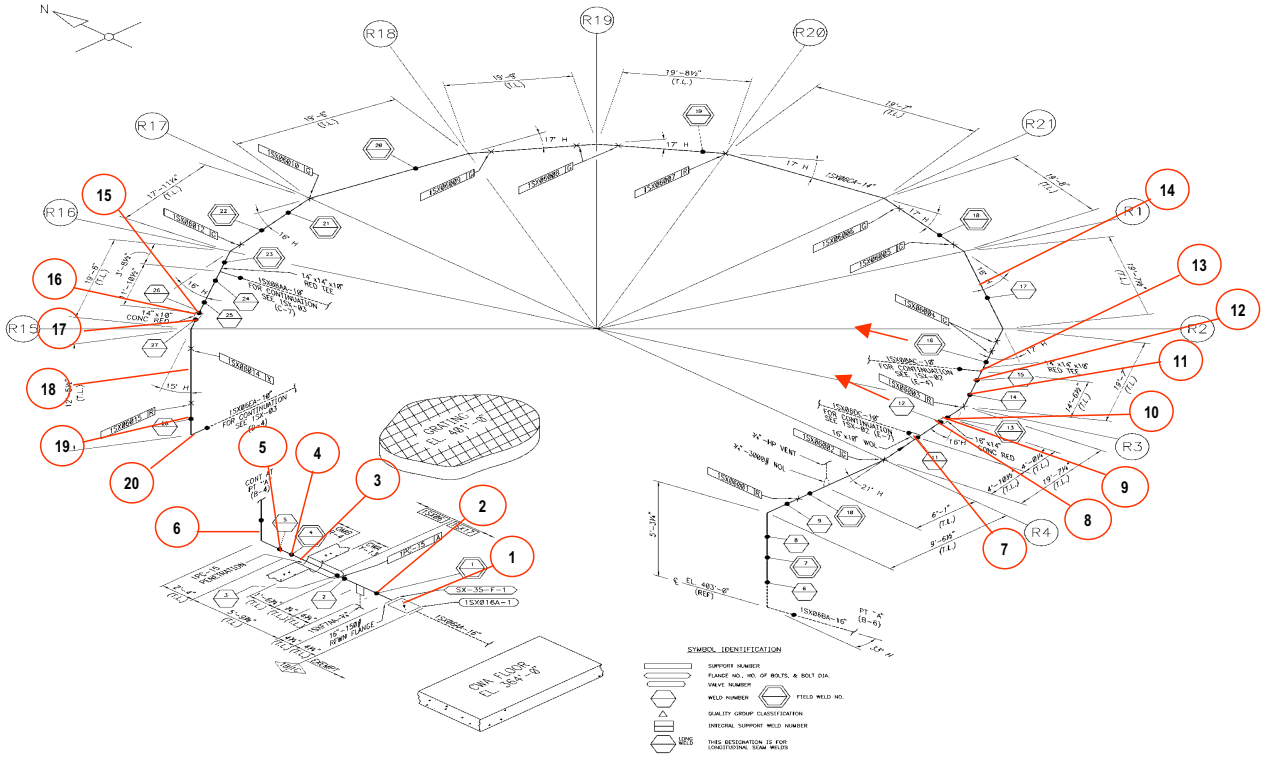

GROUP 30 – SERVICE WATER INSIDE CONTAINMENT (Sheet 2 of 4)
(Covers Worksheets SS-SWCONT – 1 thru 56)

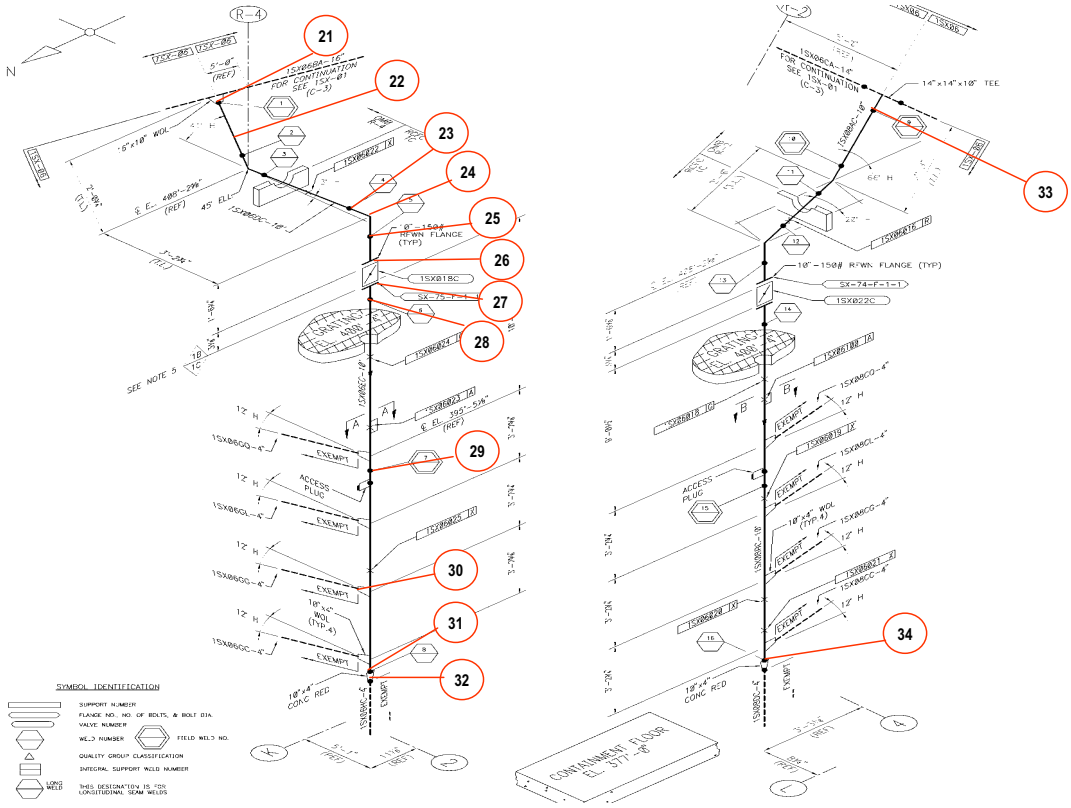

GROUP 30 – SERVICE WATER INSIDE CONTAINMENT (Sheet 3 of 4)
(Covers Worksheets SS-SWCONT – 1 thru 56)

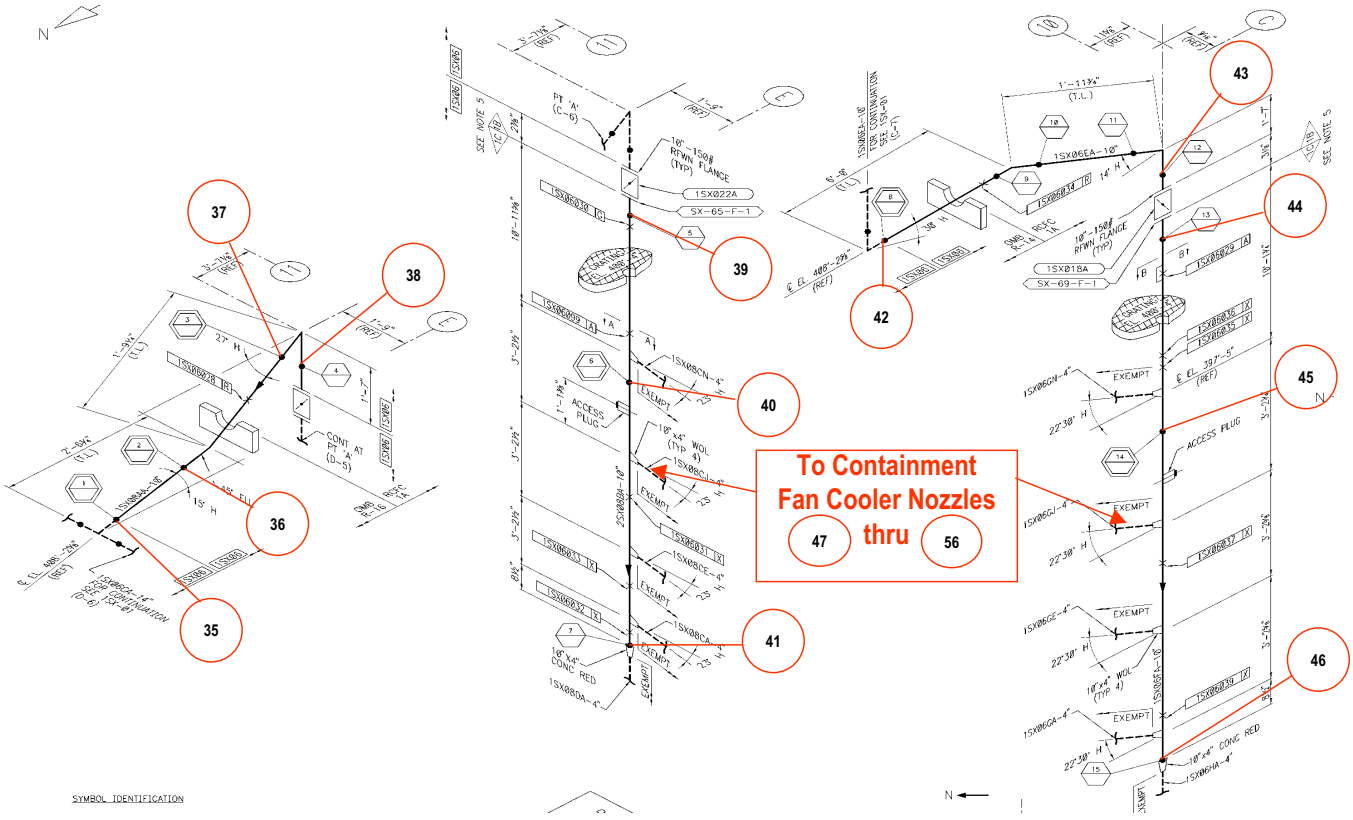

GROUP 30 – SERVICE WATER INSIDE CONTAINMENT (Sheet 4 of 4)
(Covers Worksheets SS-SWCONT – 1 thru 56)

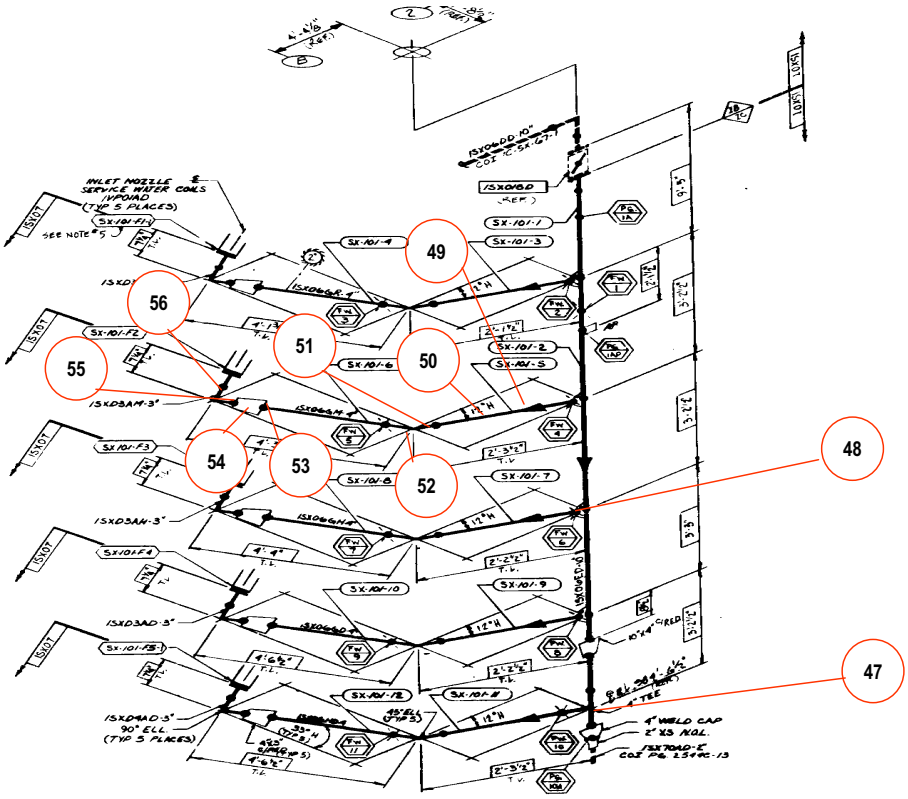

GROUP 31 – CHEMICAL VOLUME AND CONTROL SYSTEM (CVCS)
PUMPS TO CROSSOVER LEG INJECTION PIPING (Sheet 1 of 4)
(Covers Worksheets SS-CVXL – 1 thru 49)

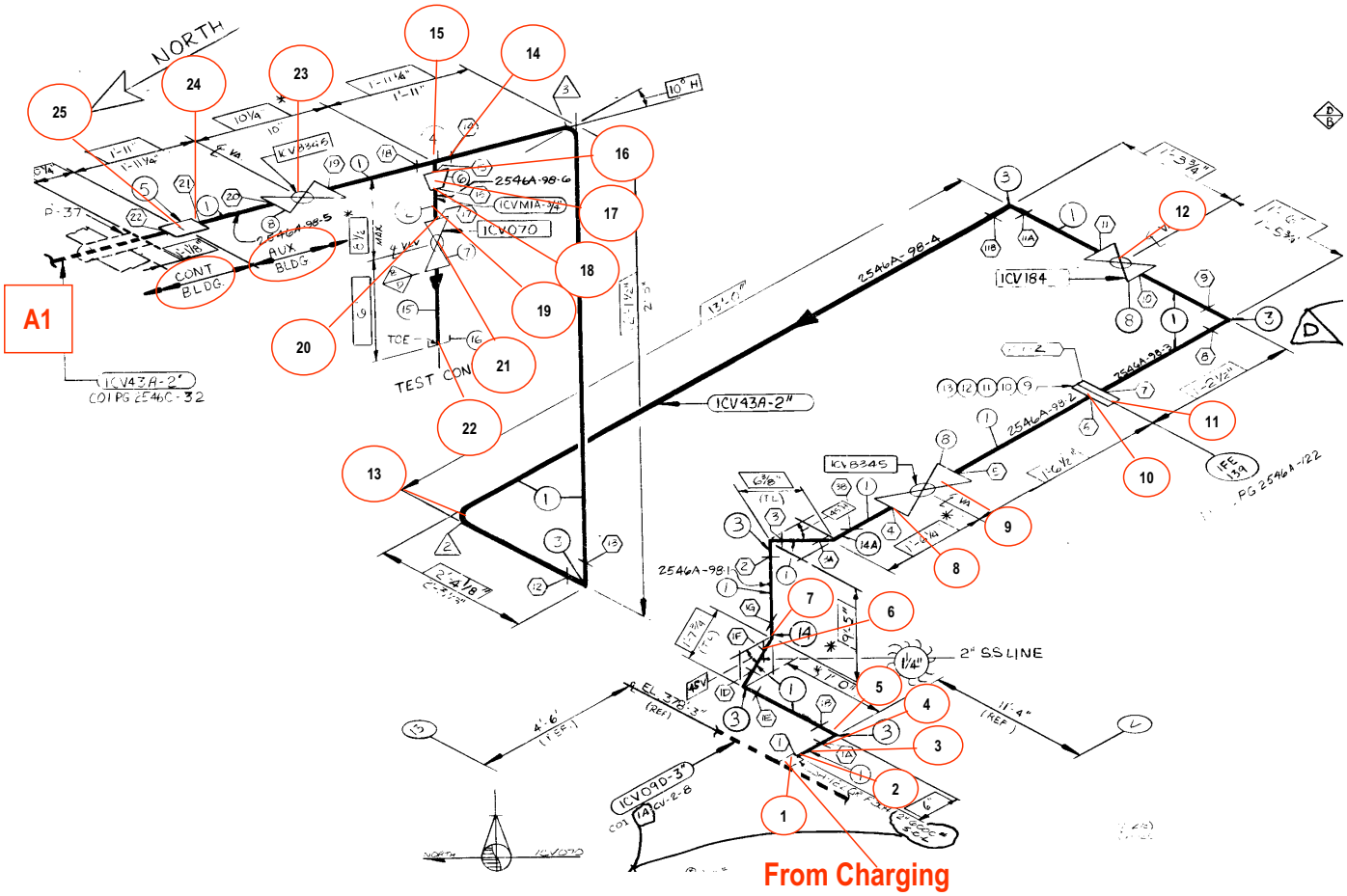

GROUP 31 – CHEMICAL VOLUME AND CONTROL SYSTEM (CVCS) PUMPS TO CROSSOVER LEG INJECTION PIPING (Sheet 2 of 4) (Covers Worksheets SS-CVXL – 1 thru 49)

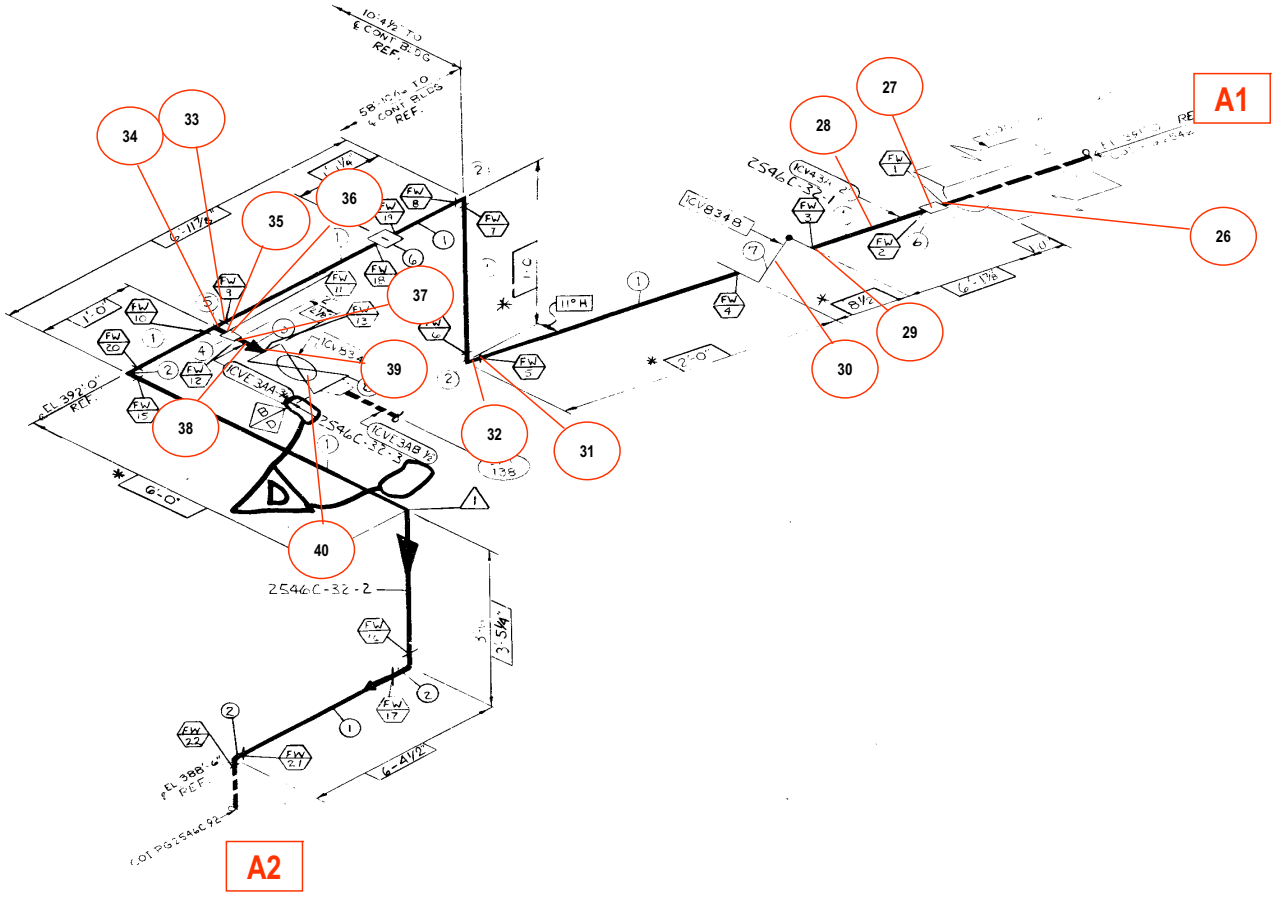

GROUP 31 – CHEMICAL VOLUME AND CONTROL SYSTEM (CVCS)
PUMPS TO CROSSOVER LEG INJECTION PIPING (Sheet 3 of 4)
(Covers Worksheets SS-CVXL – 1 thru 49)

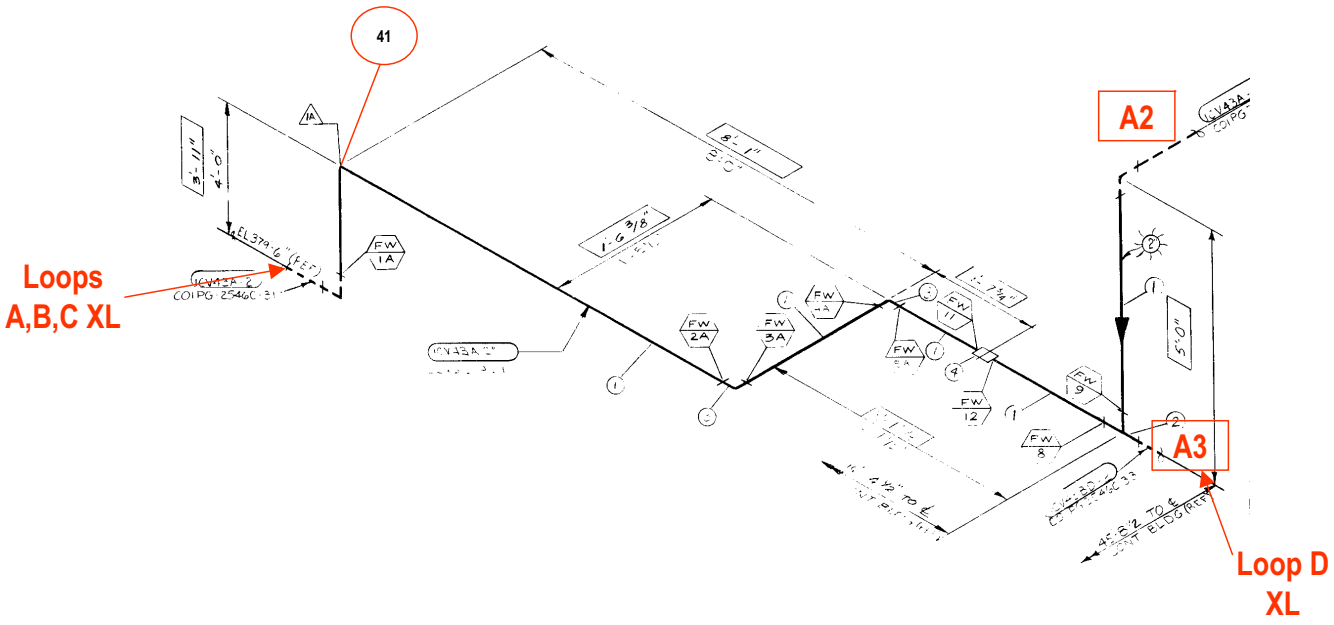

GROUP 31 – CHEMICAL VOLUME AND CONTROL SYSTEM (CVCS) PUMPS TO CROSSOVER LEG INJECTION PIPING (Sheet 4 of 4) (Covers Worksheets SS-CVXL – 1 thru 49)

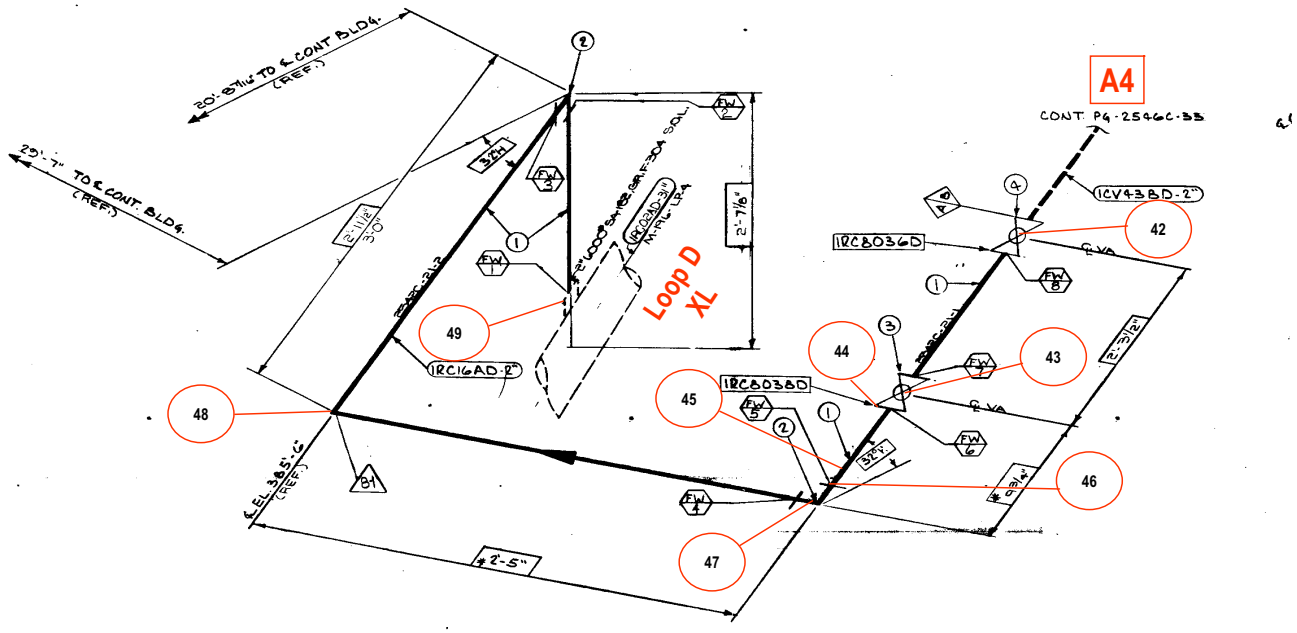

GROUP 32 – CHEMICAL VOLUME AND CONTROL SYSTEM (CVCS)
NORMAL LETDOWN PIPING CL 3 to Regenerative HX (Sheet 1 of 4)
(Covers Worksheets SS-CVLD – 1 thru 35)

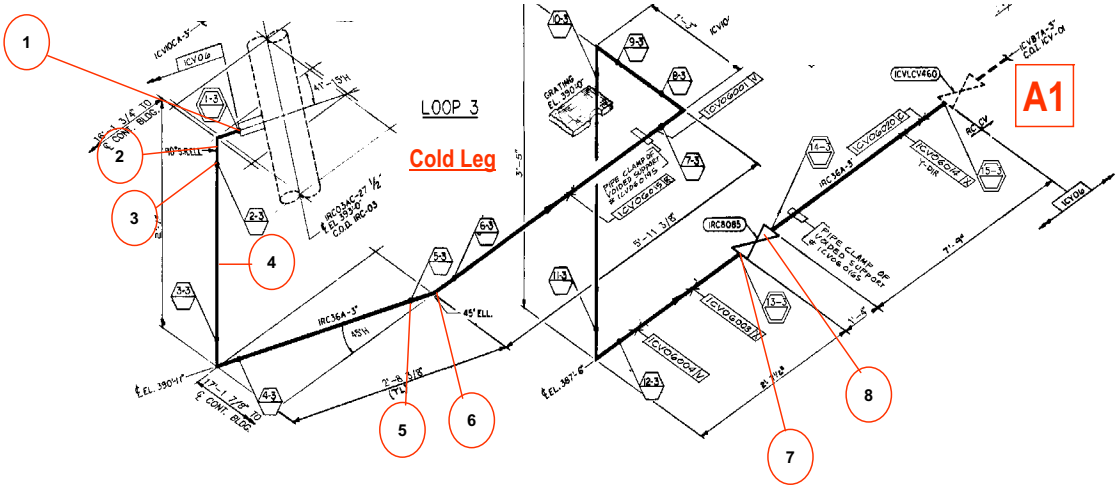

GROUP 32 – CHEMICAL VOLUME AND CONTROL SYSTEM (CVCS) NORMAL LETDOWN PIPING CL 3 to Regenerative HX (Sheet 2 of 4) (Covers Worksheets SS-CVLD – 1 thru 35)

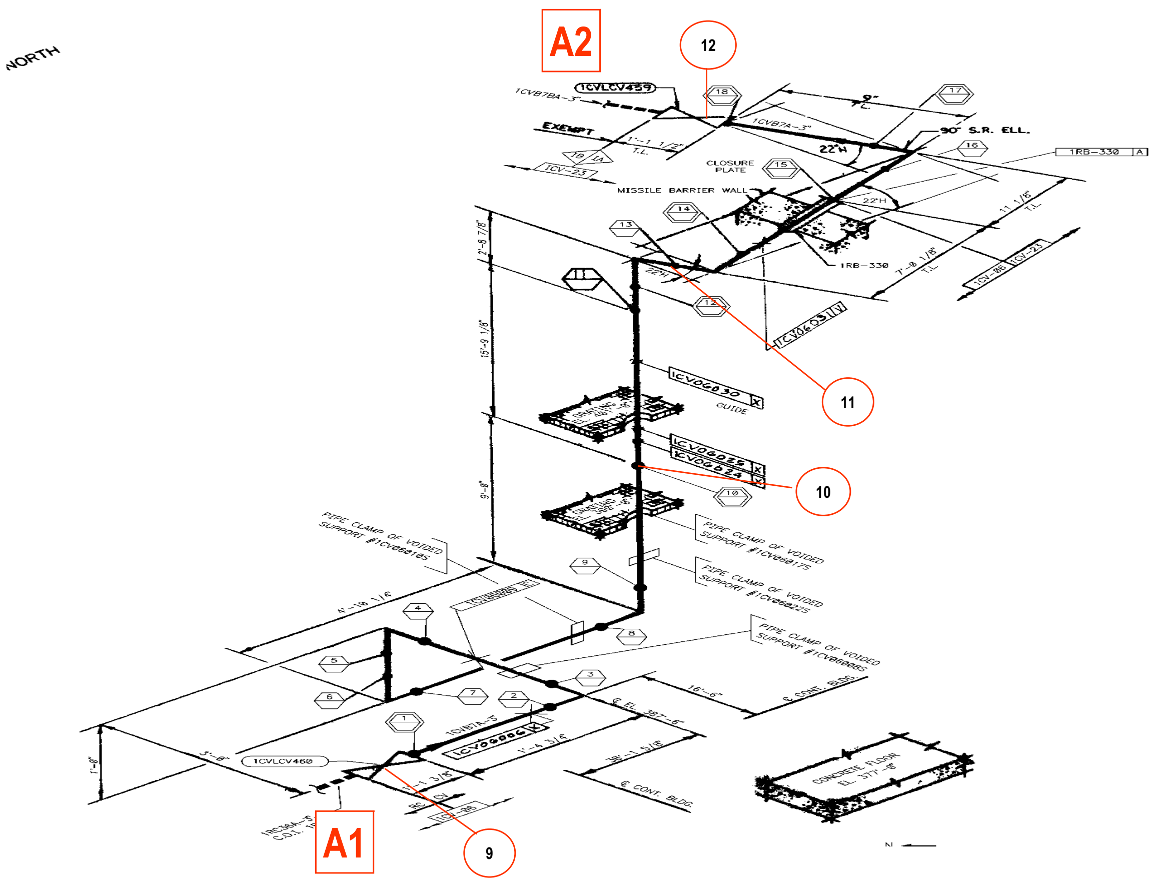

GROUP 32 – CHEMICAL VOLUME AND CONTROL SYSTEM (CVCS)
NORMAL LETDOWN PIING CL 3 to Regenerative HX (Sheet 3 of 4)
(Covers Worksheets SS-CVLD – 1 thru 35)

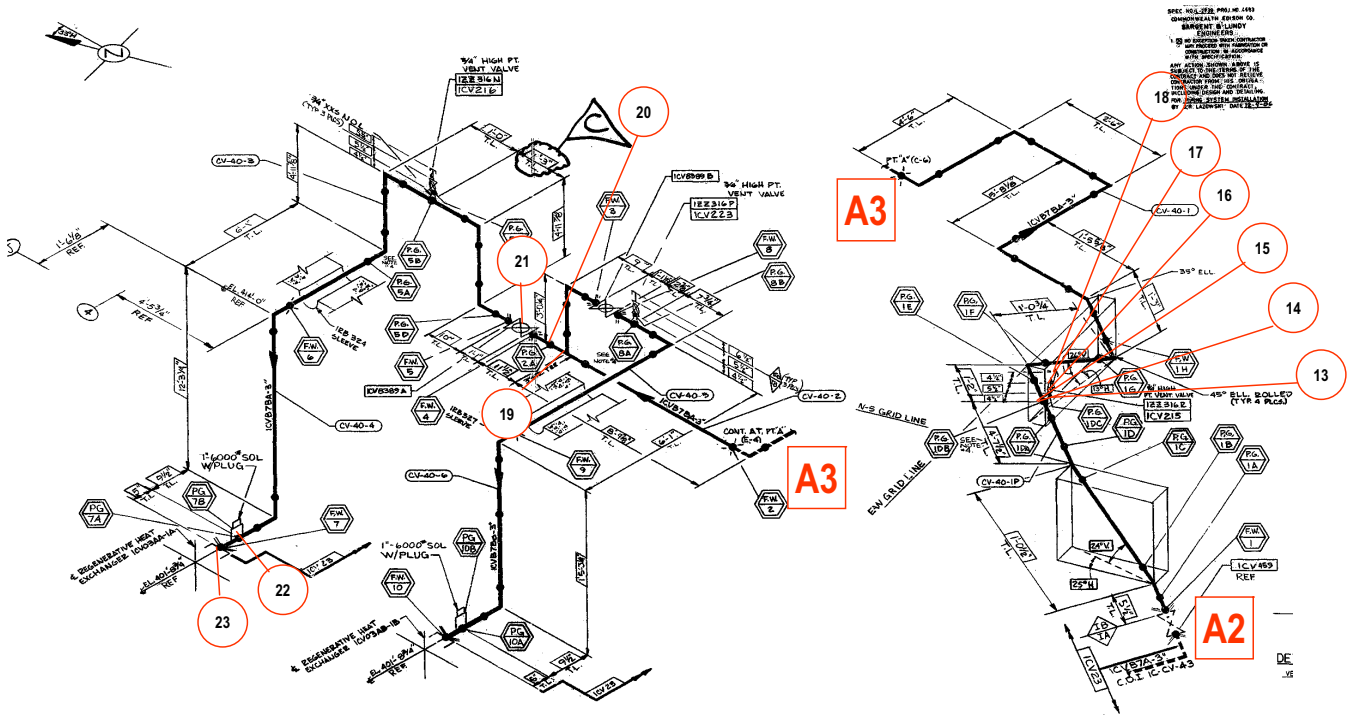

GROUP 32 – CHEMICAL VOLUME AND CONTROL SYSTEM (CVCS)
NORMAL LETDOWN PIPING CL 3 to Regenerative HX (Sheet 4 of 4)
(Covers Worksheets SS-CVLD – 1 thru 35)

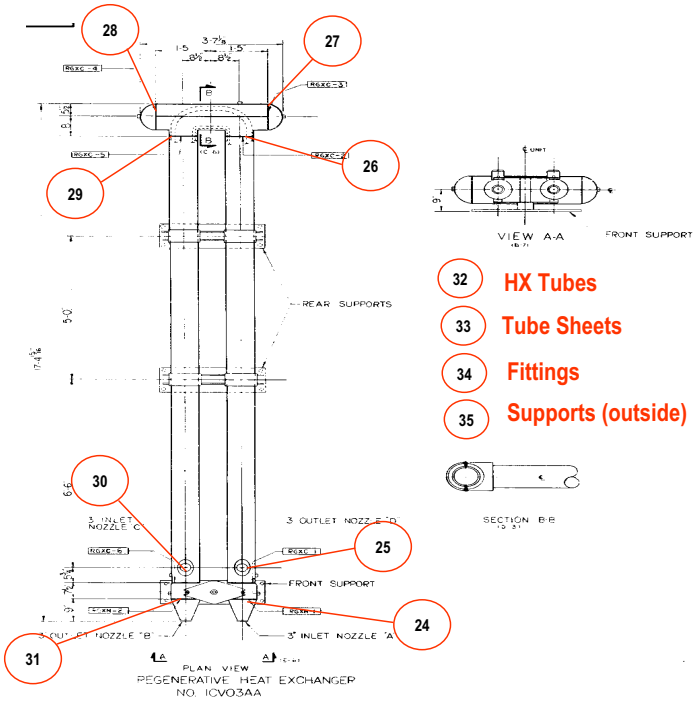

GROUP 33 – CHEMICAL VOLUME AND CONTROL SYSTEM (CVCS)
Regenerative HX to Letdown HX (Sheet 1 of 4)
(Covers Worksheets SS-RHXLHX – 1 thru 56)

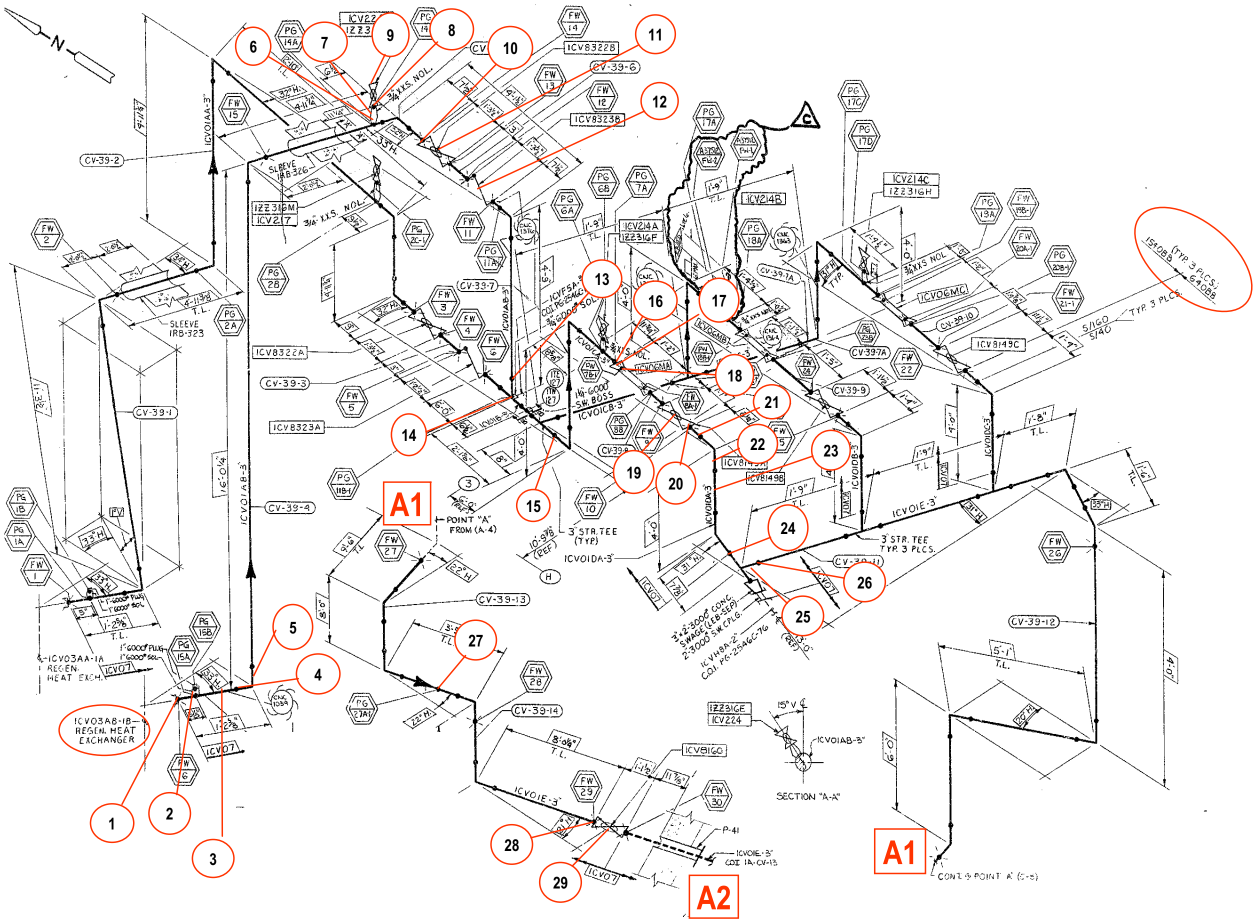

GROUP 33 – CHEMICAL VOLUME AND CONTROL SYSTEM (CVCS)
Regenerative HX to Letdown HX (Sheet 2 of 4)
(Covers Worksheets SS-RHXLHX – 1 thru 56)

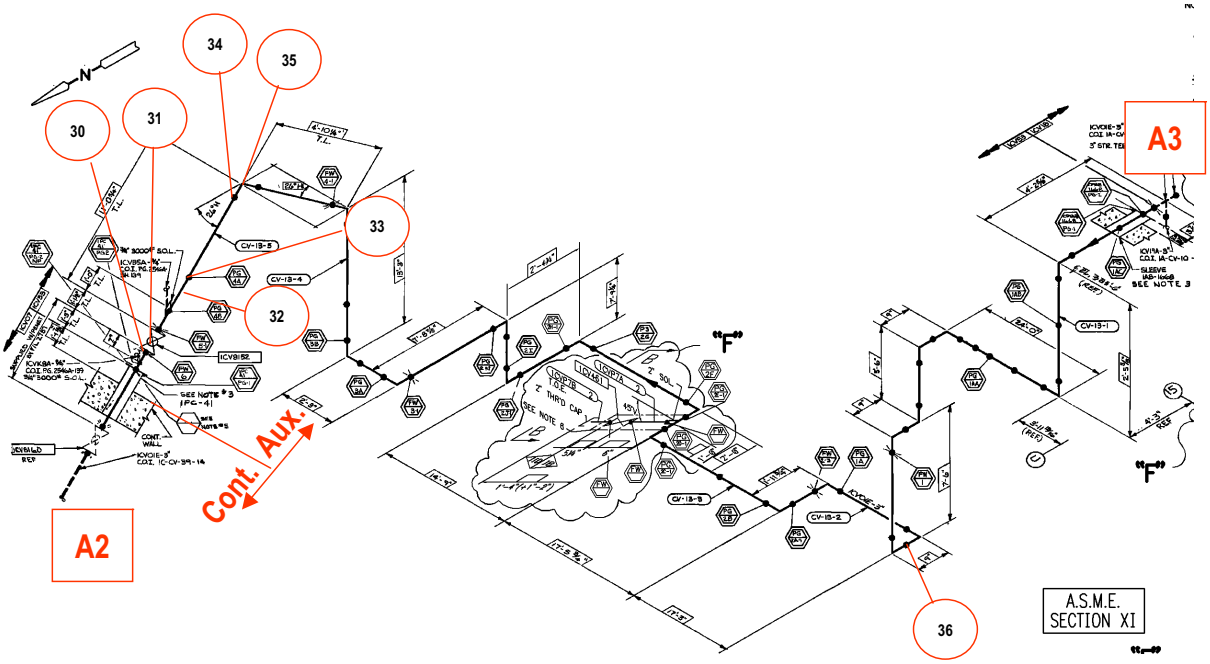

GROUP 33 – CHEMICAL VOLUME AND CONTROL SYSTEM (CVCS)
Regenerative HX to Letdown HX (Sheet 3 of 4)
(Covers Worksheets SS-RHXLHX – 1 thru 56)

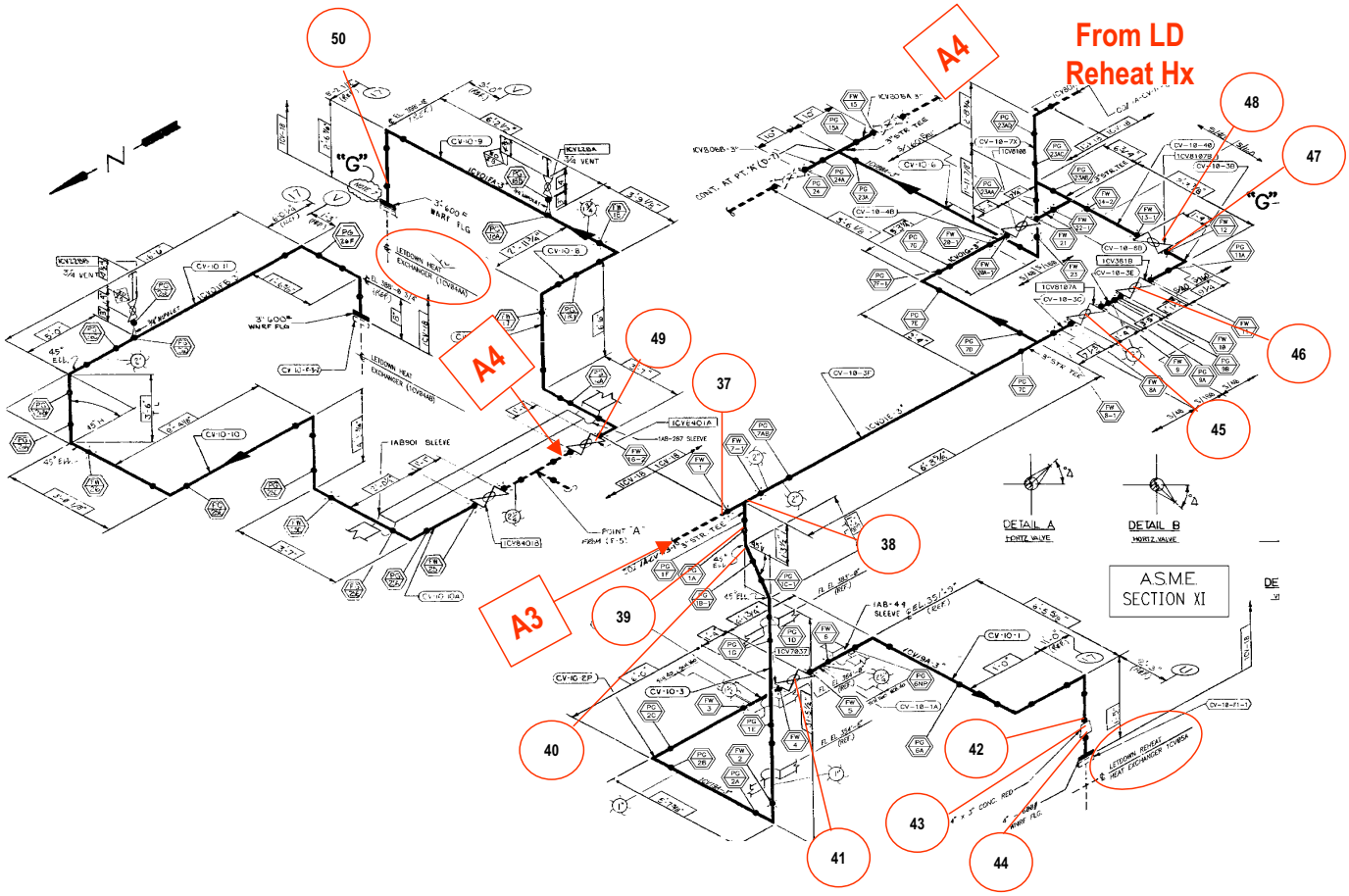

GROUP 33 – CHEMICAL VOLUME AND CONTROL SYSTEM (CVCS)
Regenerative HX to Letdown HX (Sheet 4 of 4)
(Covers Worksheets SS-RHXLHX – 1 thru 56)

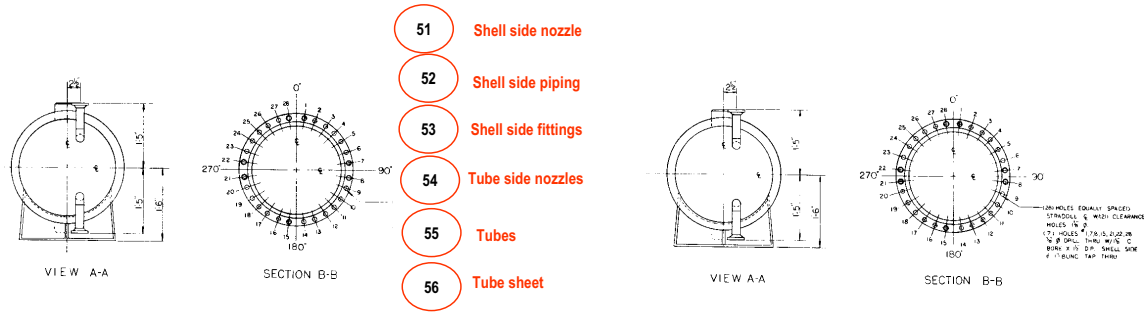

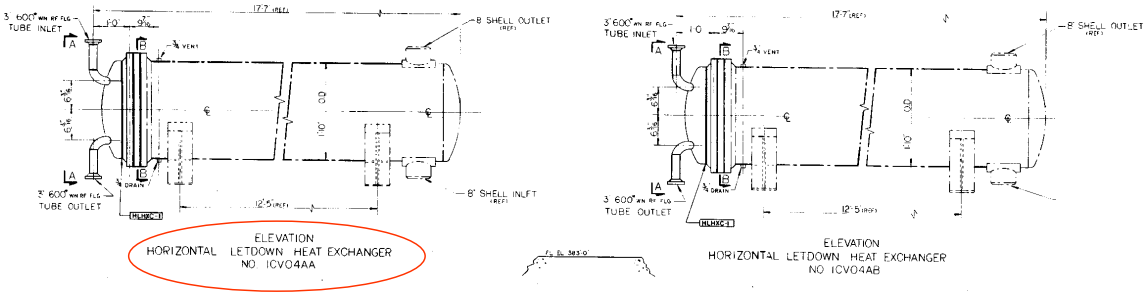

GROUP 34 – CHEMICAL VOLUME AND CONTROL SYSTEM (CVCS)
Letdown HX to VCT (Sheet 1 of 6)
(Covers Worksheets SS-LHXVCT – 1 thru 53)

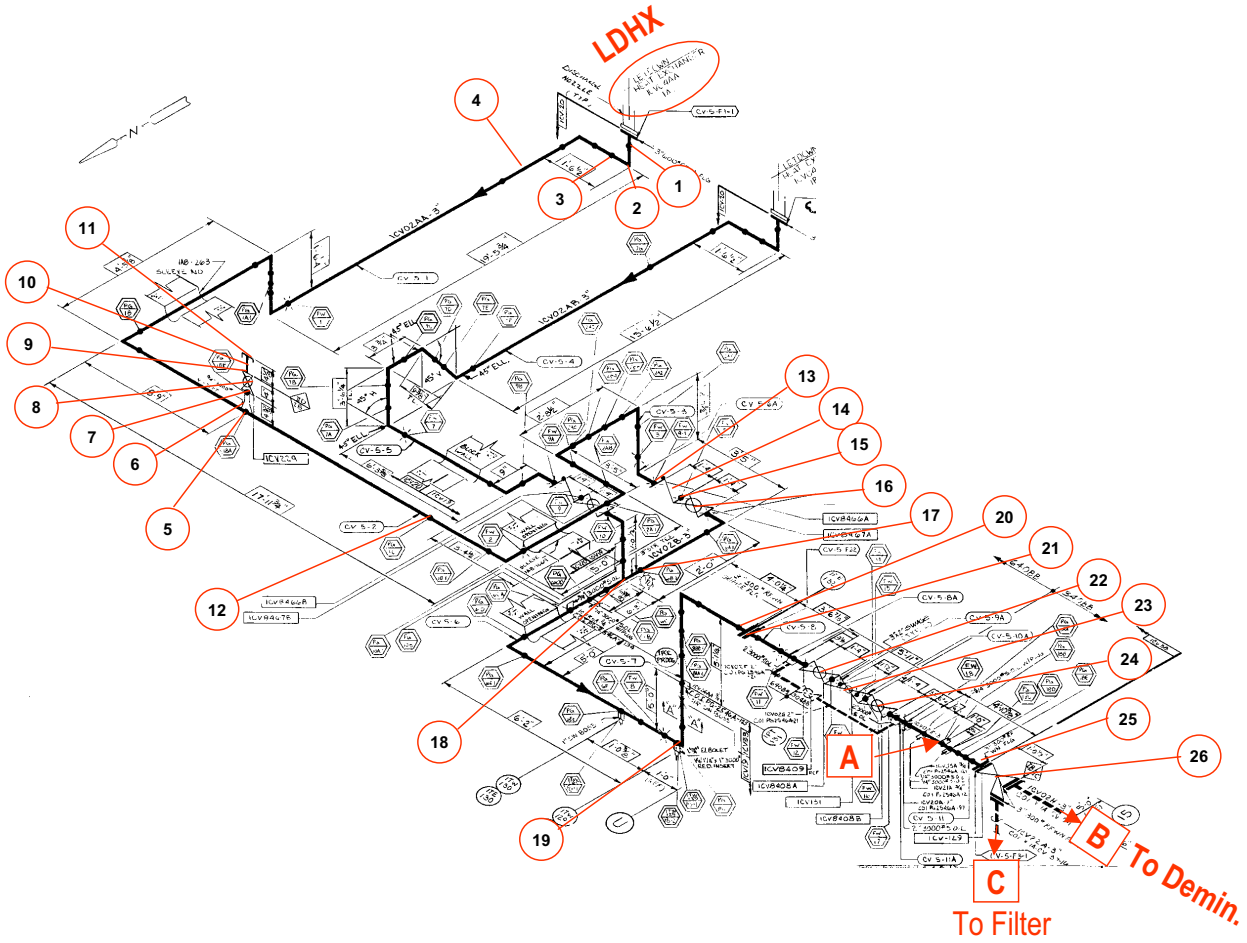

GROUP 34 – CHEMICAL VOLUME AND CONTROL SYSTEM (CVCS)
Letdown HX to VCT (Sheet 2 of 6)
(Covers Worksheets SS-LHXVCT – 1 thru 53)

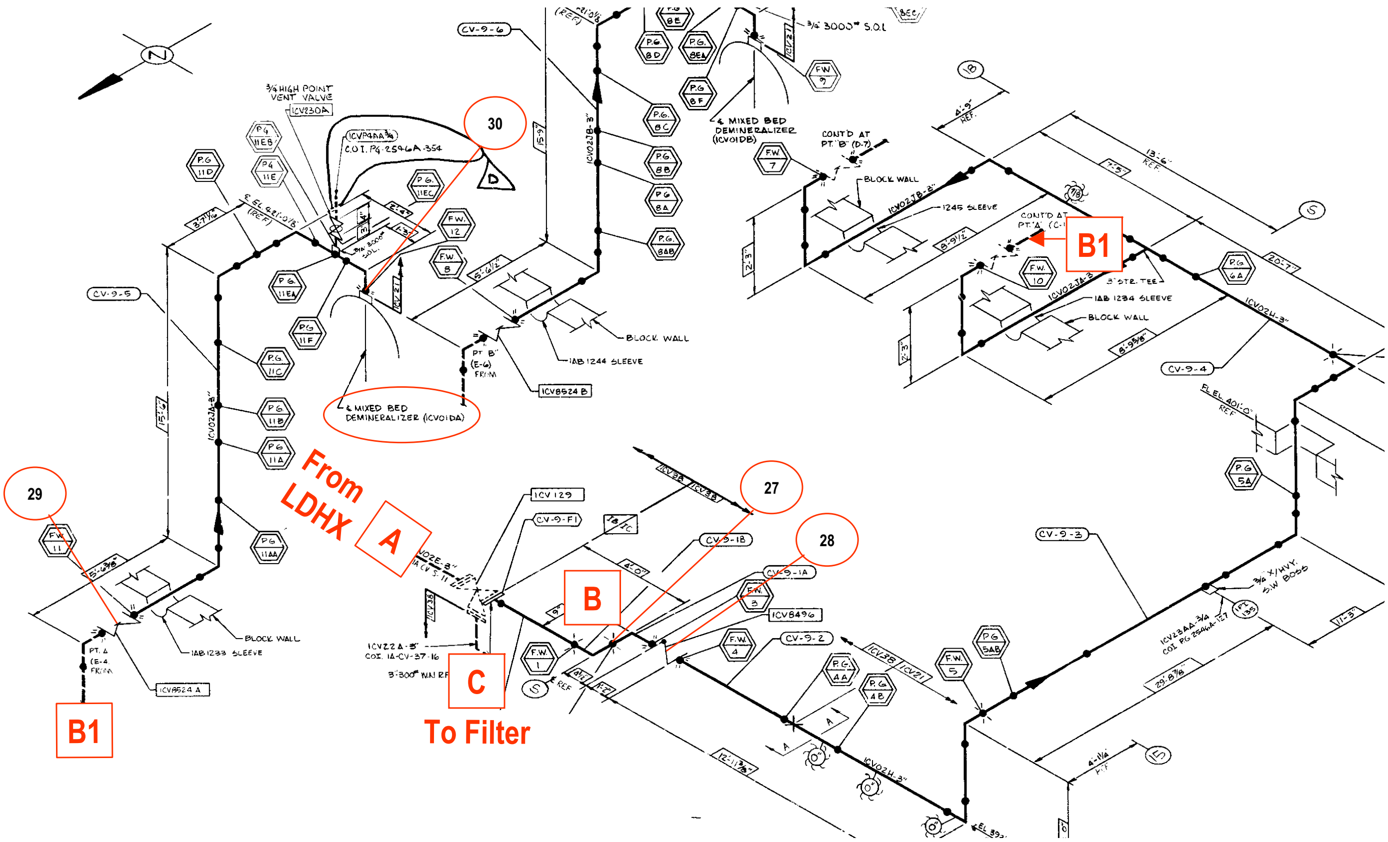

GROUP 34 – CHEMICAL VOLUME AND CONTROL SYSTEM (CVCS)
Letdown HX to VCT (Sheet 3 of 6)
(Covers Worksheets SS-LHXVCT – 1 thru 53)

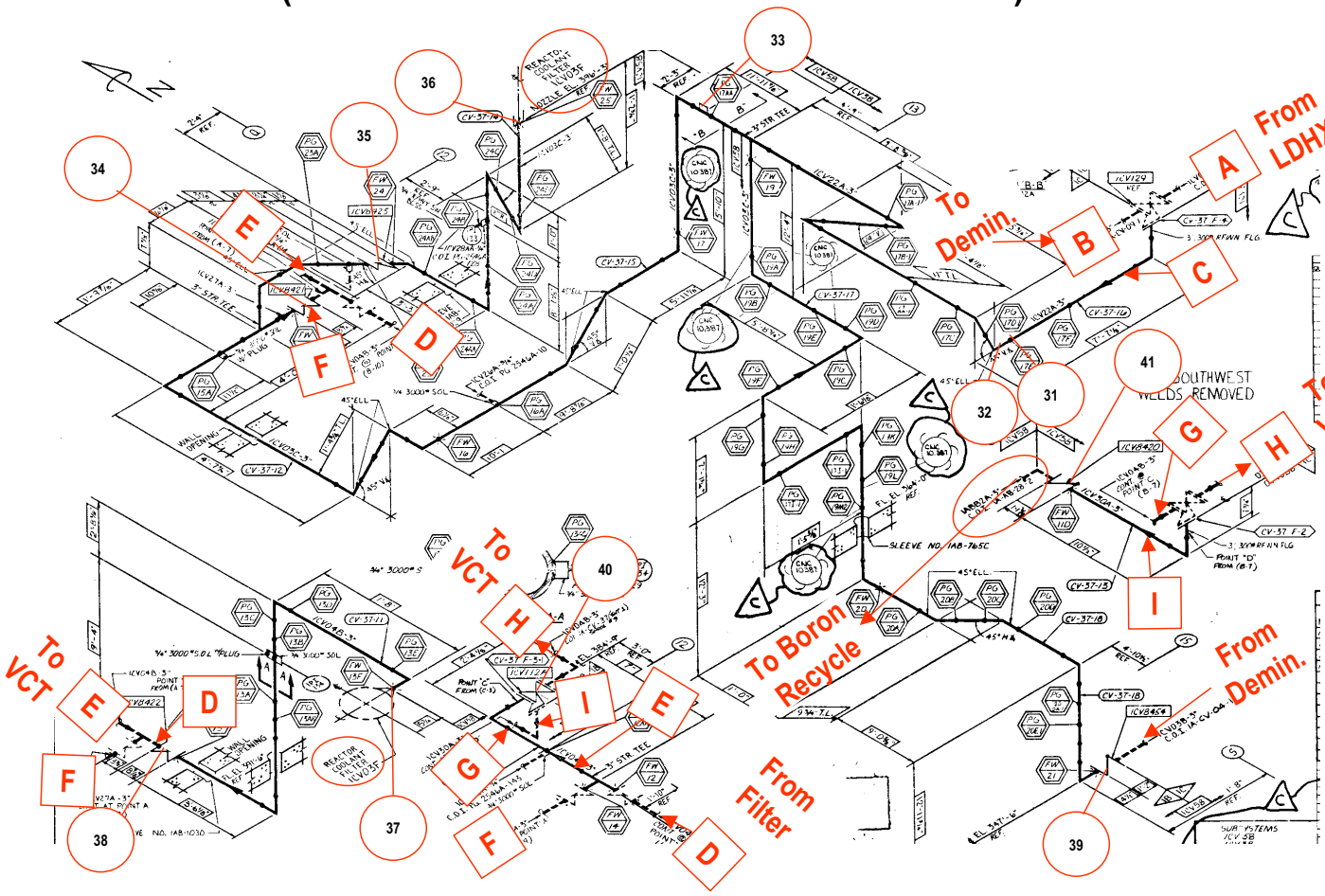

GROUP 34 – CHEMICAL VOLUME AND CONTROL SYSTEM (CVCS)
Letdown HX to VCT (Sheet 4 of 6)
(Covers Worksheets SS-LHXVCT – 1 thru 53)

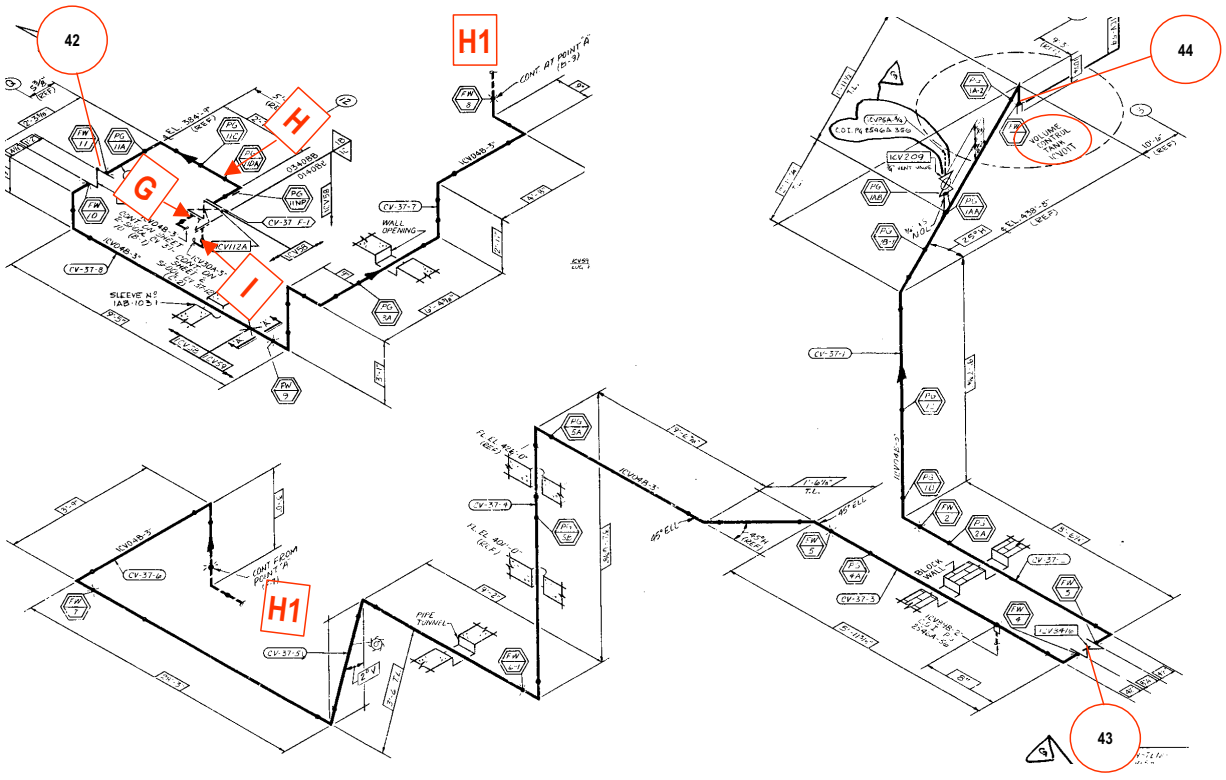

GROUP 34 – CHEMICAL VOLUME AND CONTROL SYSTEM (CVCS)
Letdown HX to VCT (Sheet 5 of 6)
(Covers Worksheets SS-LHXVCT – 1 thru 53)

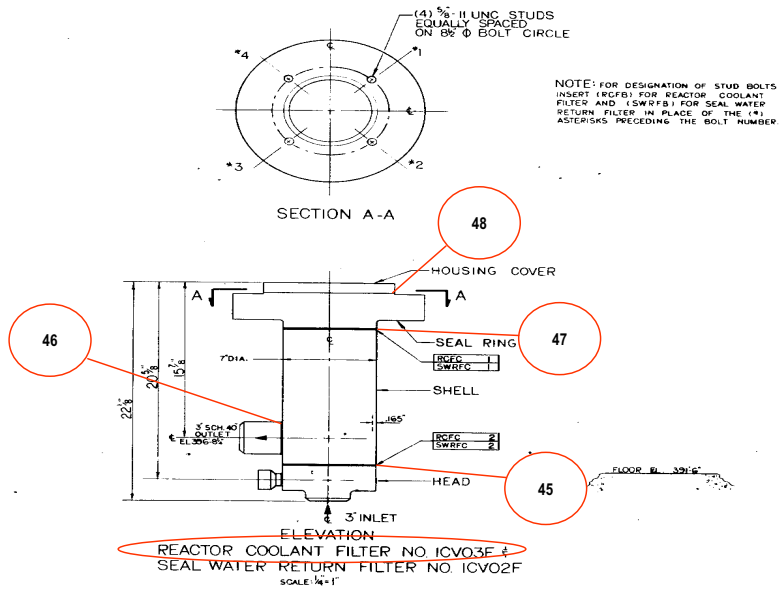

GROUP 34 – CHEMICAL VOLUME AND CONTROL SYSTEM (CVCS)
Letdown HX to VCT (Sheet 6 of 6)
(Covers Worksheets SS-LHXVCT – 1 thru 53)

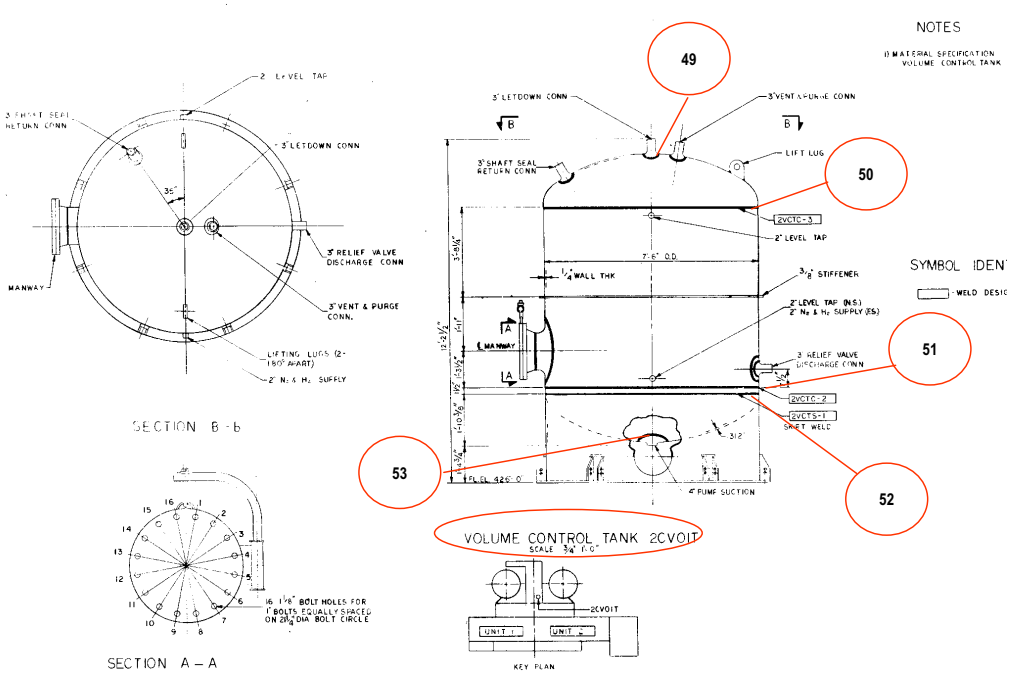

GROUP 35 – CHEMICAL VOLUME AND CONTROL SYSTEM (CVCS)
From Mixed and Cation Beds to Filter (Sheet 1 of 6)
(Covers Worksheets SS-MBFTR – 1 thru 48)

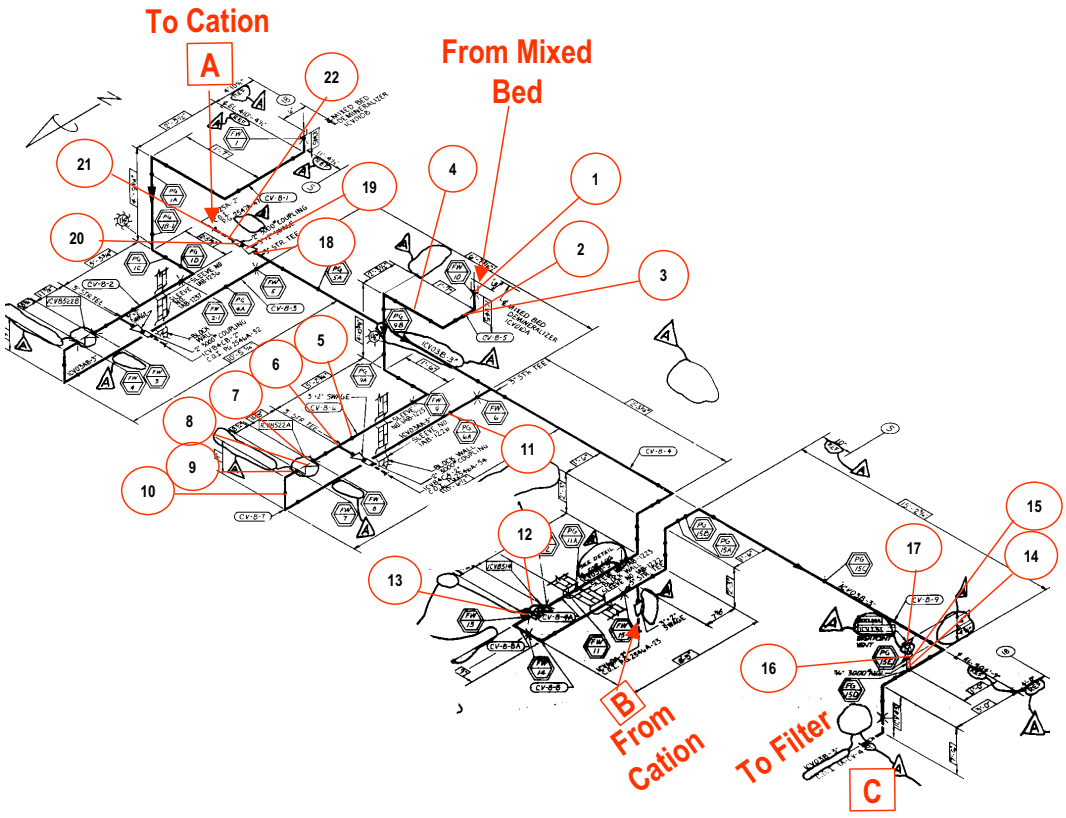

GROUP 35 – CHEMICAL VOLUME AND CONTROL SYSTEM (CVCS)
From Mixed and Cation Beds to Filter (Sheet 2 of 6)
(Covers Worksheets SS-MBFTR – 1 thru 48)

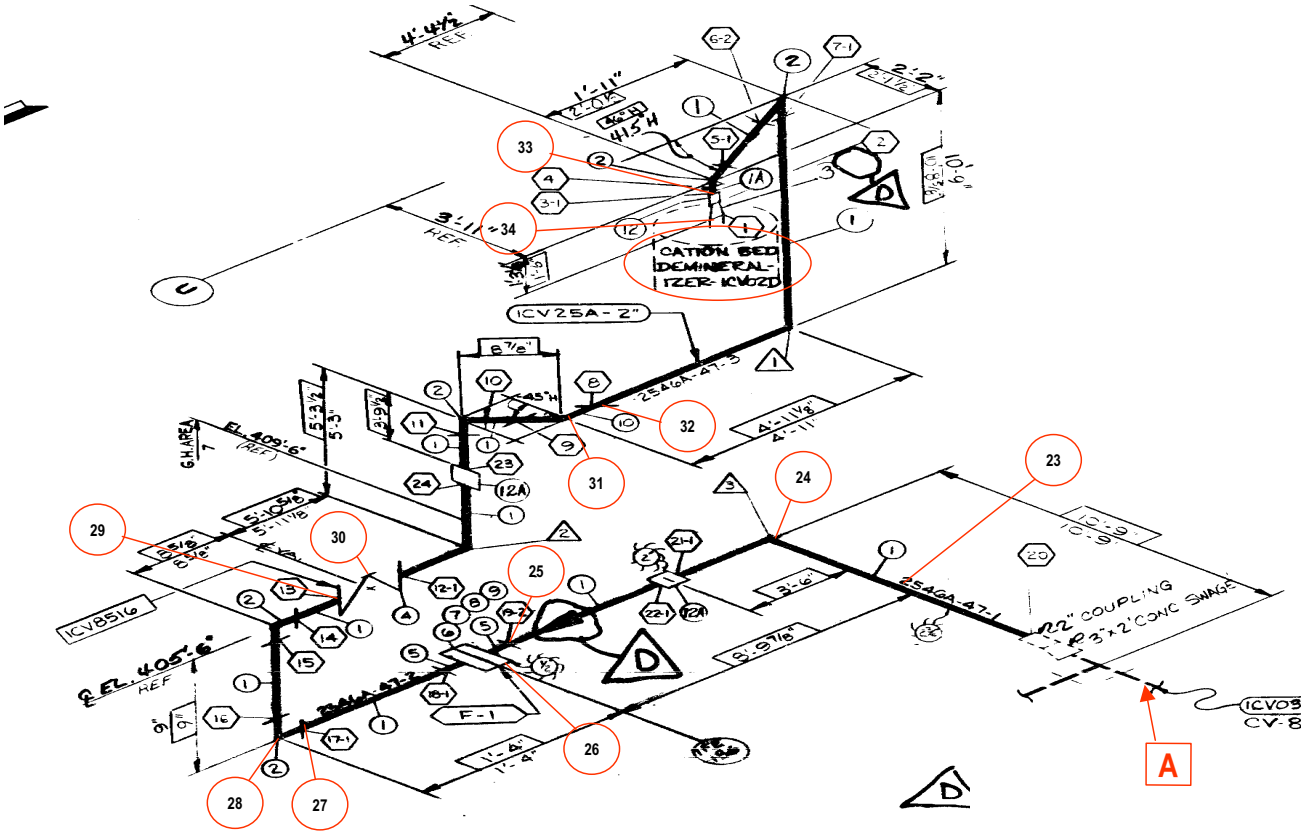

GROUP 35 – CHEMICAL VOLUME AND CONTROL SYSTEM (CVCS)
From Mixed and Cation Beds to Filter (Sheet 3 of 6)
(Covers Worksheets SS-MBFTR – 1 thru 48)

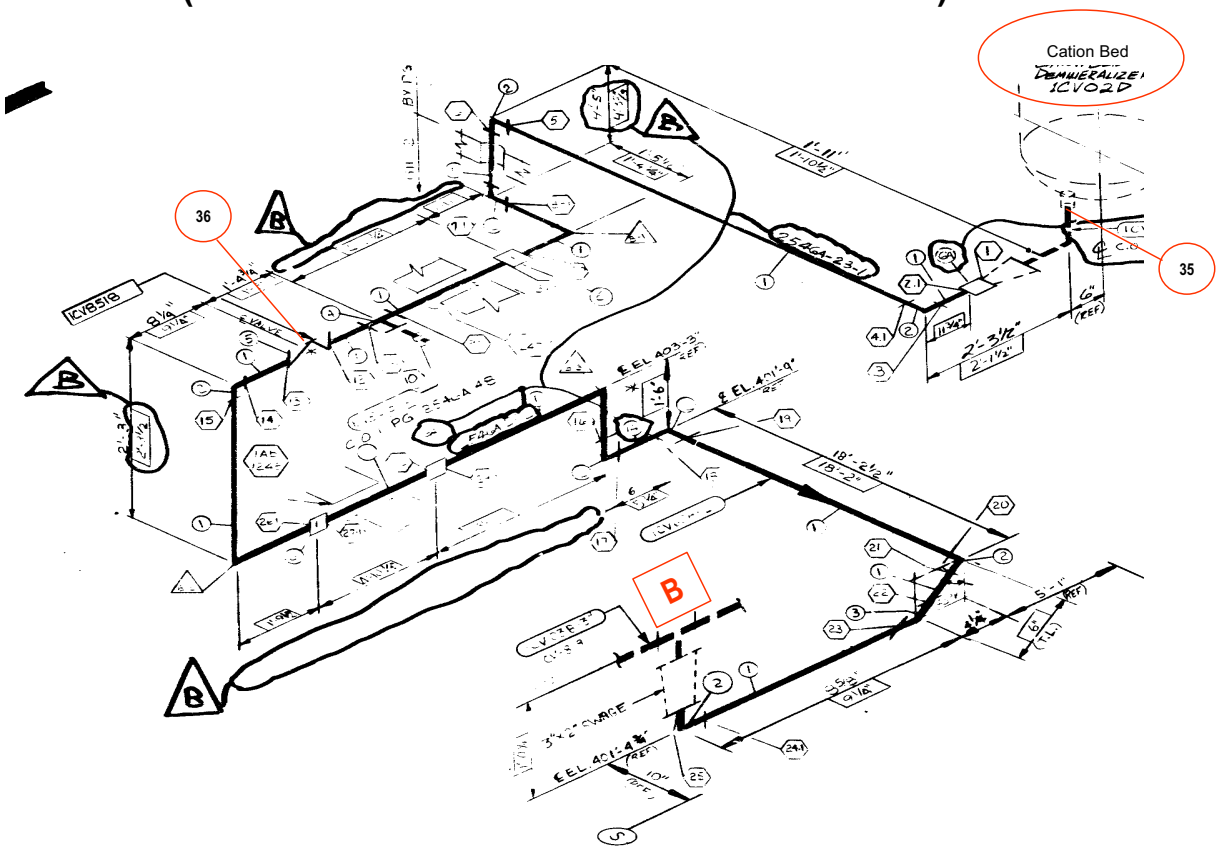

GROUP 35 – CHEMICAL VOLUME AND CONTROL SYSTEM (CVCS)
From Mixed and Cation Beds to Filter (Sheet 4 of 6)
(Covers Worksheets SS-MBFTR – 1 thru 48)

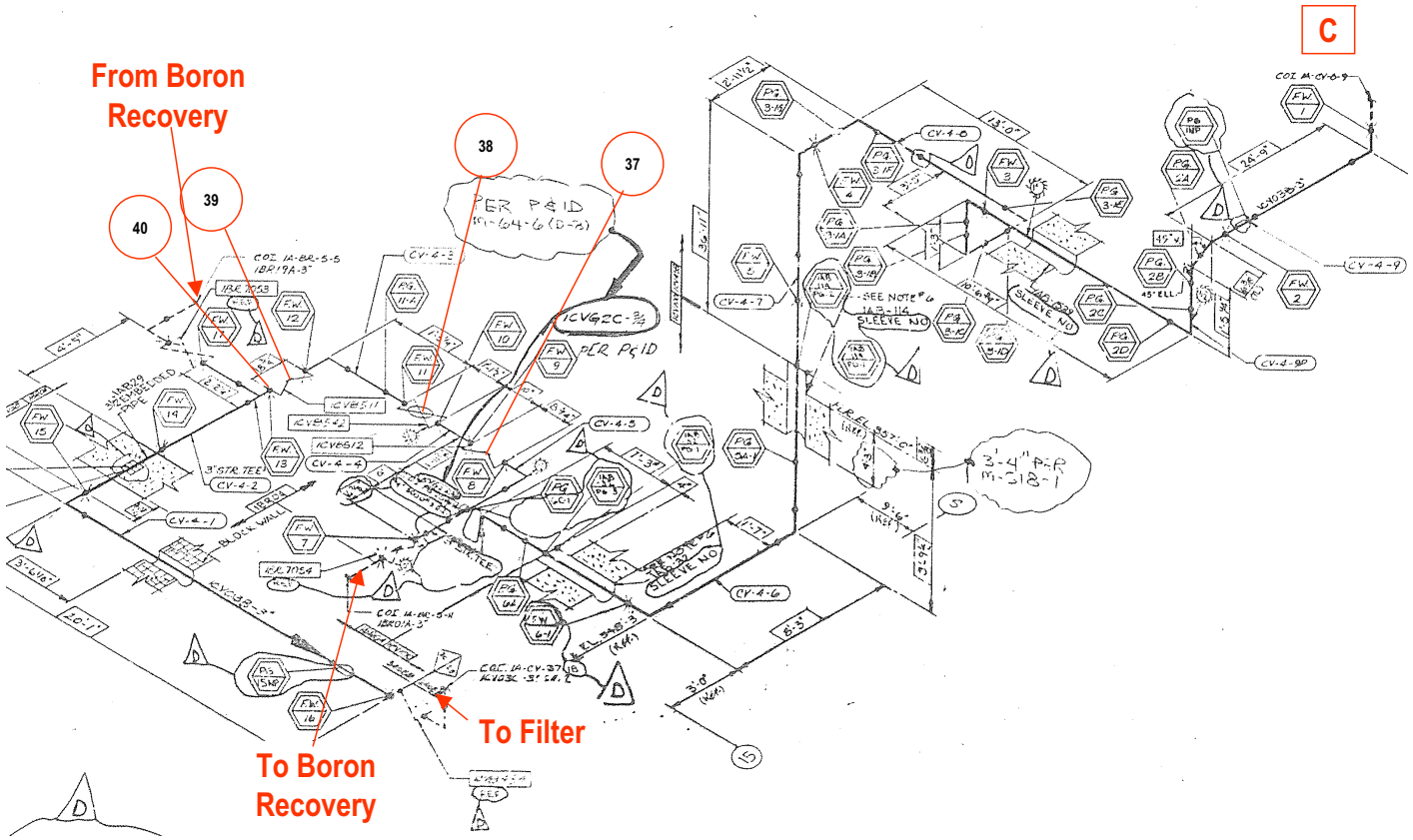

GROUP 35 – CHEMICAL VOLUME AND CONTROL SYSTEM (CVCS)
From Mixed and Cation Beds to Filter (Sheet 5 of 6)
(Covers Worksheets SS-MBFTR – 1 thru 48)

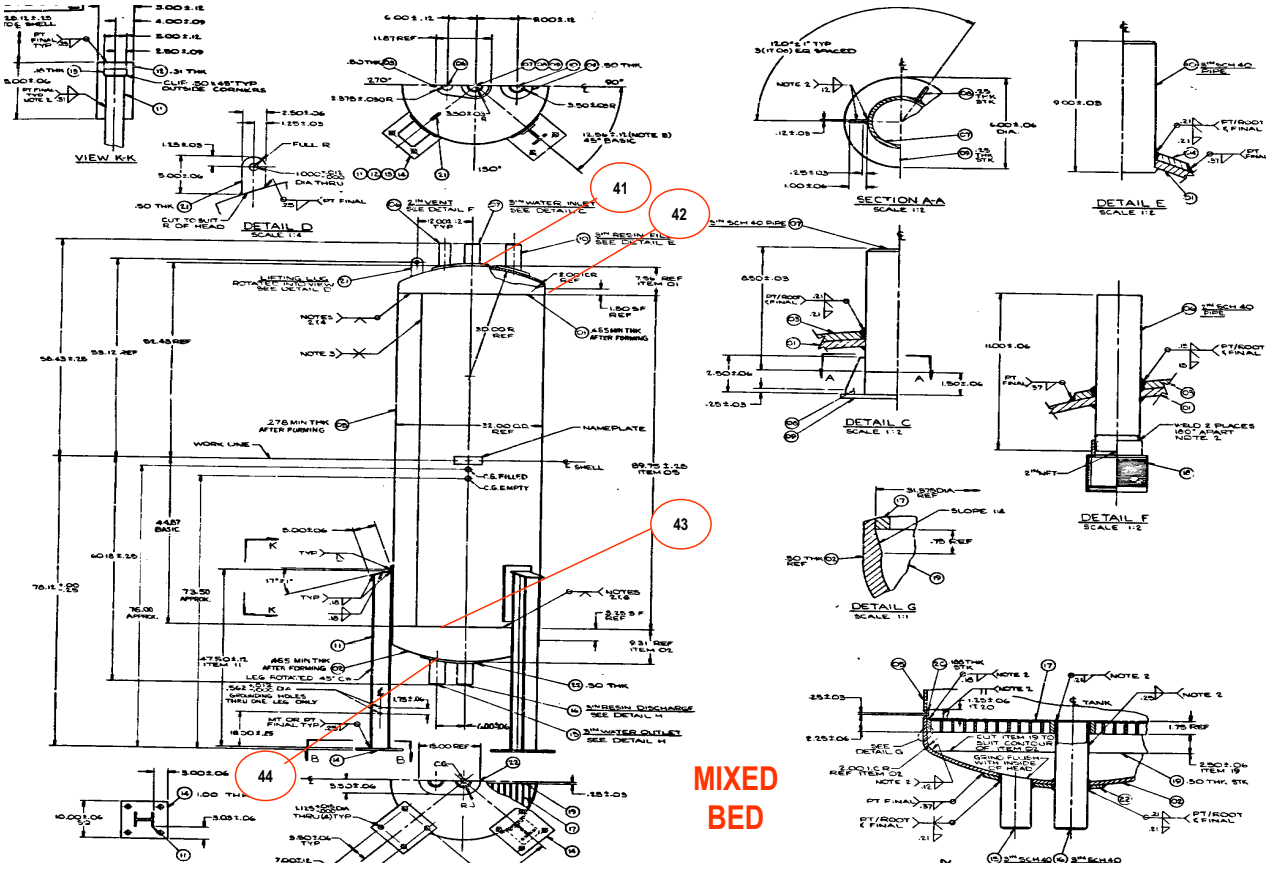

GROUP 35 – CHEMICAL VOLUME AND CONTROL SYSTEM (CVCS)
From Mixed and Cation Beds to Filter (Sheet 6 of 6)
(Covers Worksheets SS-MBFTR – 1 thru 48)

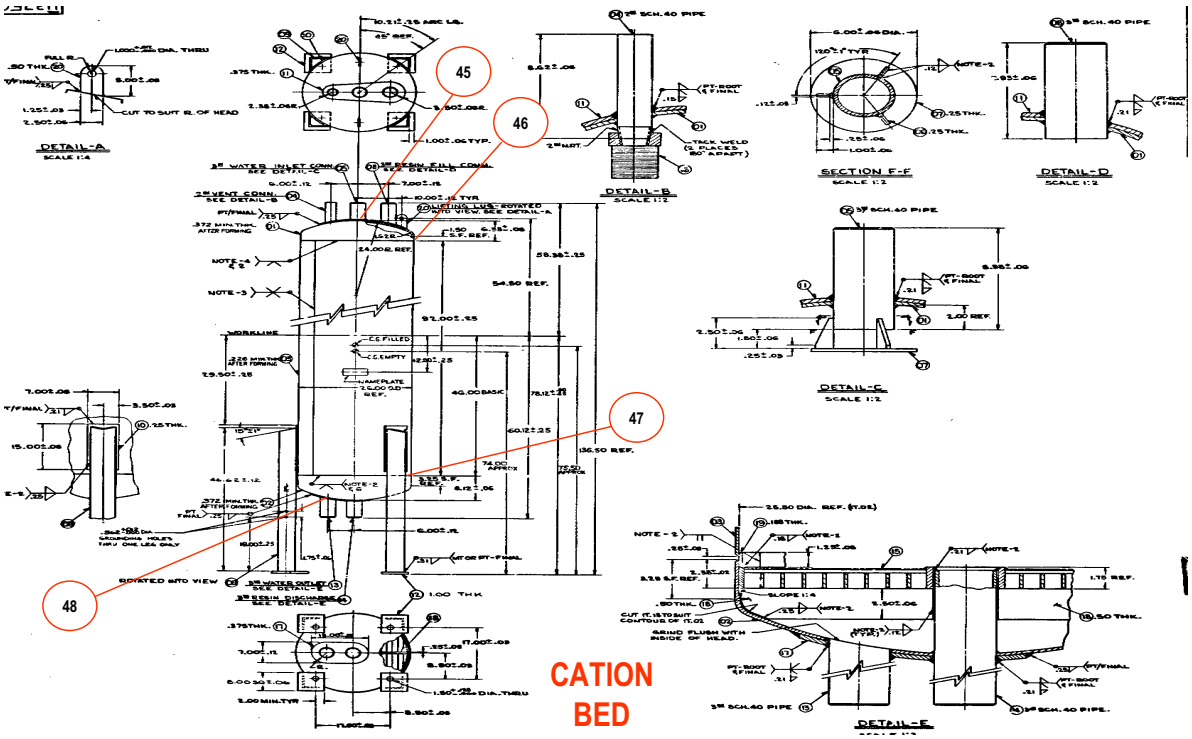

GROUP 36 – CHEMICAL VOLUME AND CONTROL SYSTEM (CVCS)
VCT/RCP Seal Return Piping to Charging Pumps (Sheet 1 of 7)
(Covers Worksheets SS-VCTCVP – 1 thru 70)

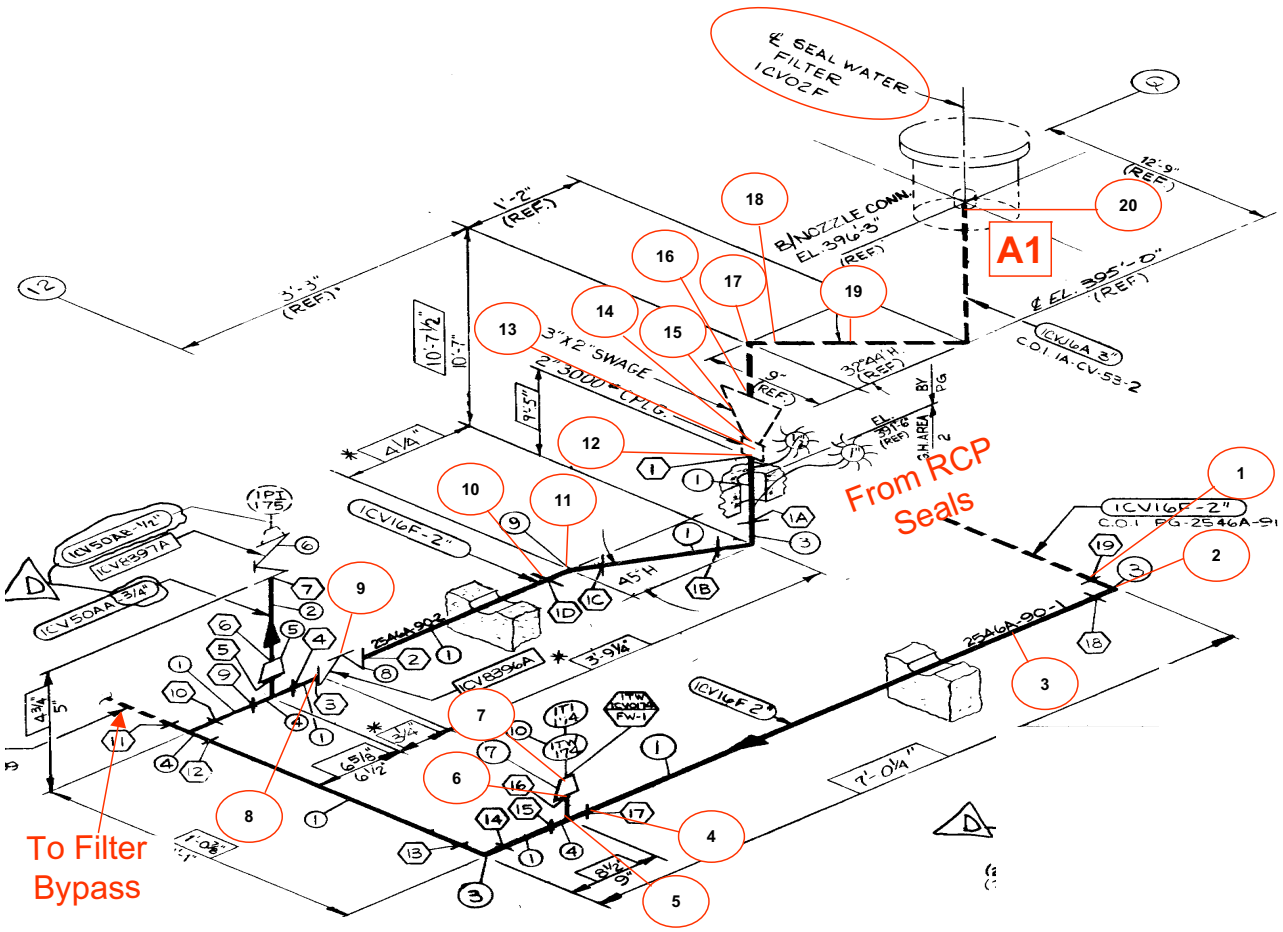

GROUP 36 – CHEMICAL VOLUME AND CONTROL SYSTEM (CVCS)
VCT/RCP Seal Return Piping to Charging Pumps (Sheet 2 of 7)
(Covers Worksheets SS-VCTCVP – 1 thru 70)

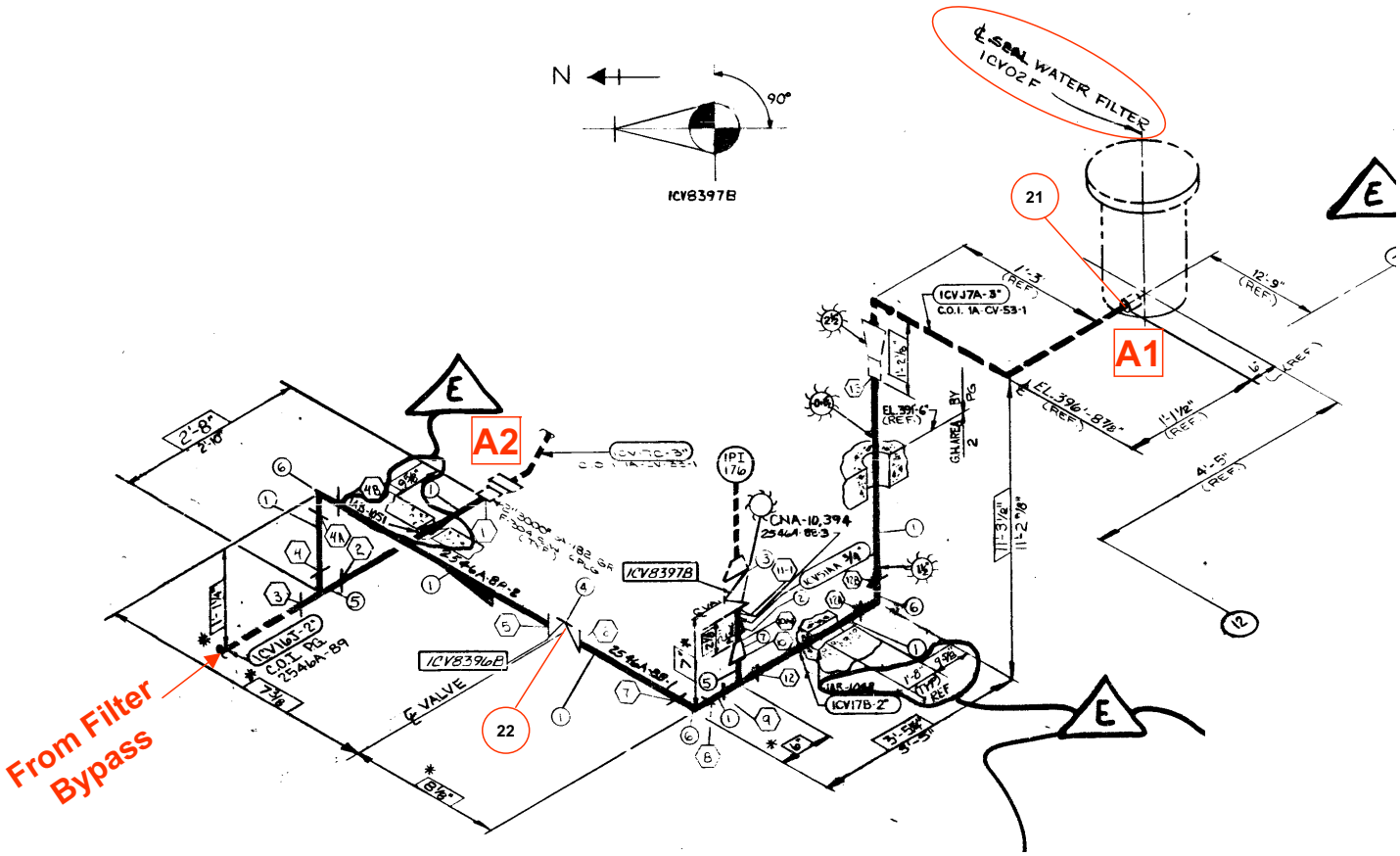

GROUP 36 – CHEMICAL VOLUME AND CONTROL SYSTEM (CVCS)
VCT/RCP Seal Return Piping to Charging Pumps (Sheet 3 of 7)
(Covers Worksheets SS-VCTCVP – 1 thru 70)

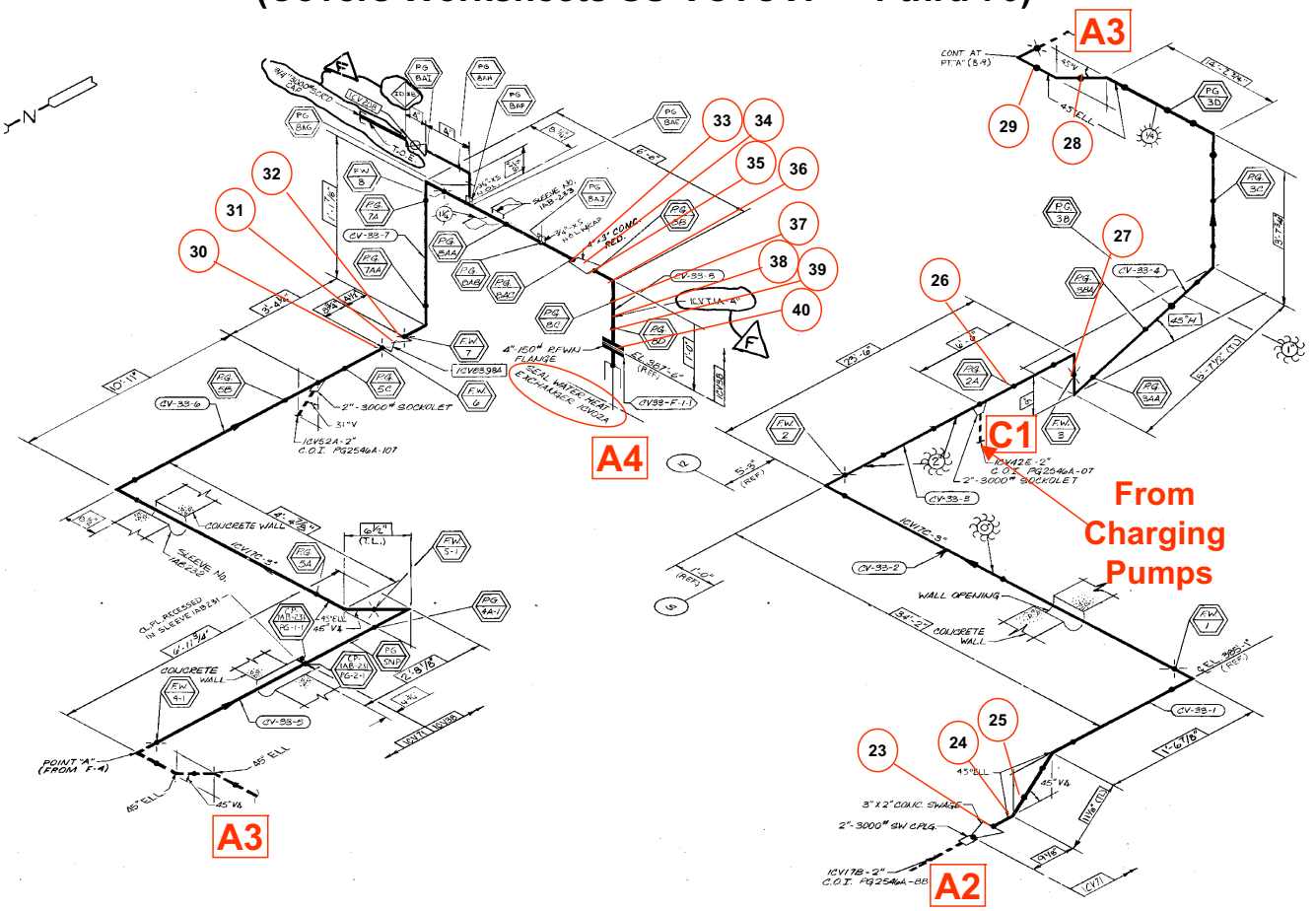

GROUP 36 – CHEMICAL VOLUME AND CONTROL SYSTEM (CVCS)
VCT/RCP Seal Return Piping to Charging Pumps (Sheet 4 of 7)
(Covers Worksheets SS-VCTCVP – 1 thru 70)

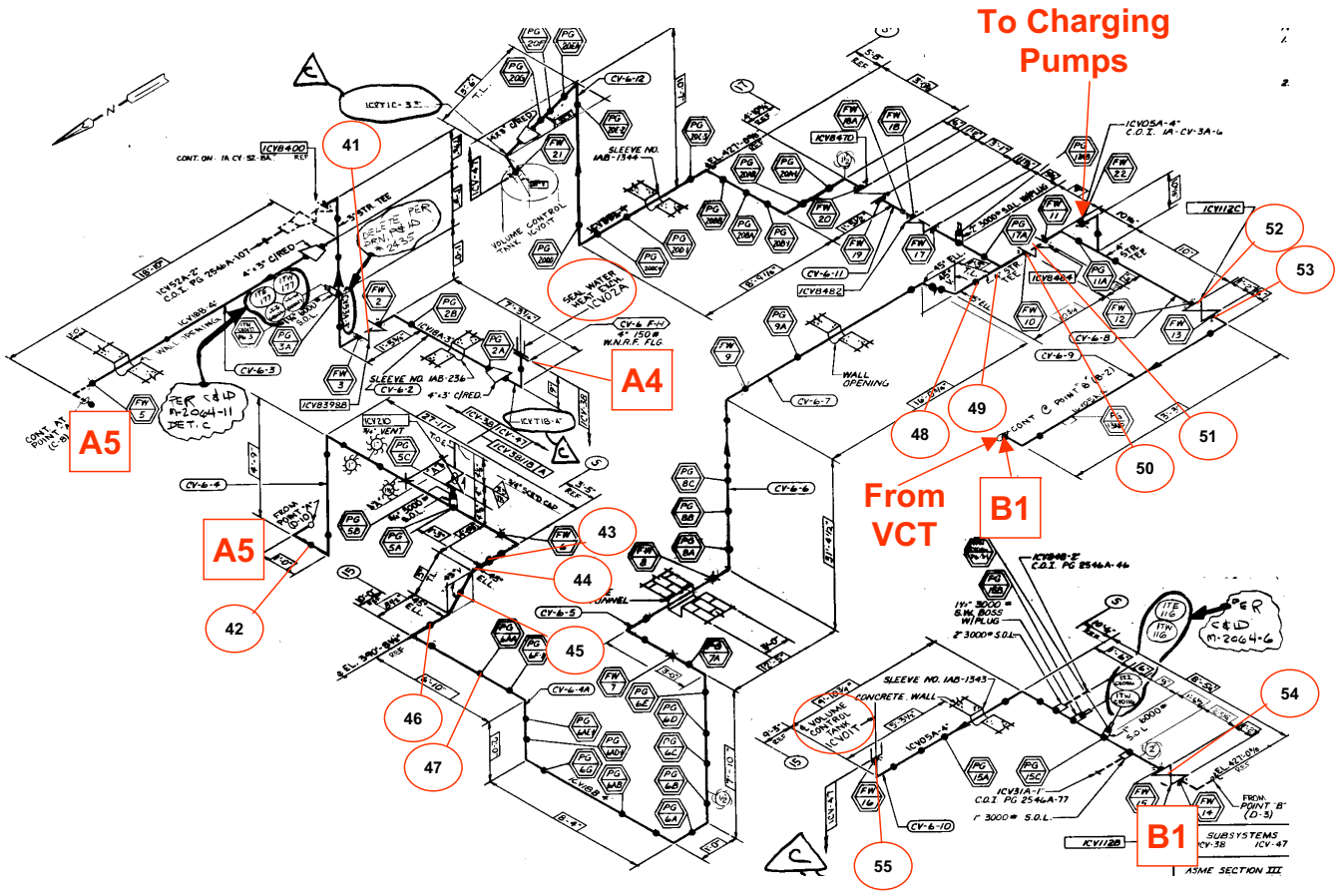

GROUP 36 – CHEMICAL VOLUME AND CONTROL SYSTEM (CVCS)
VCT/RCP Seal Return Piping to Charging Pumps (Sheet 5 of 7)
(Covers Worksheets SS-VCTCVP – 1 thru 70)

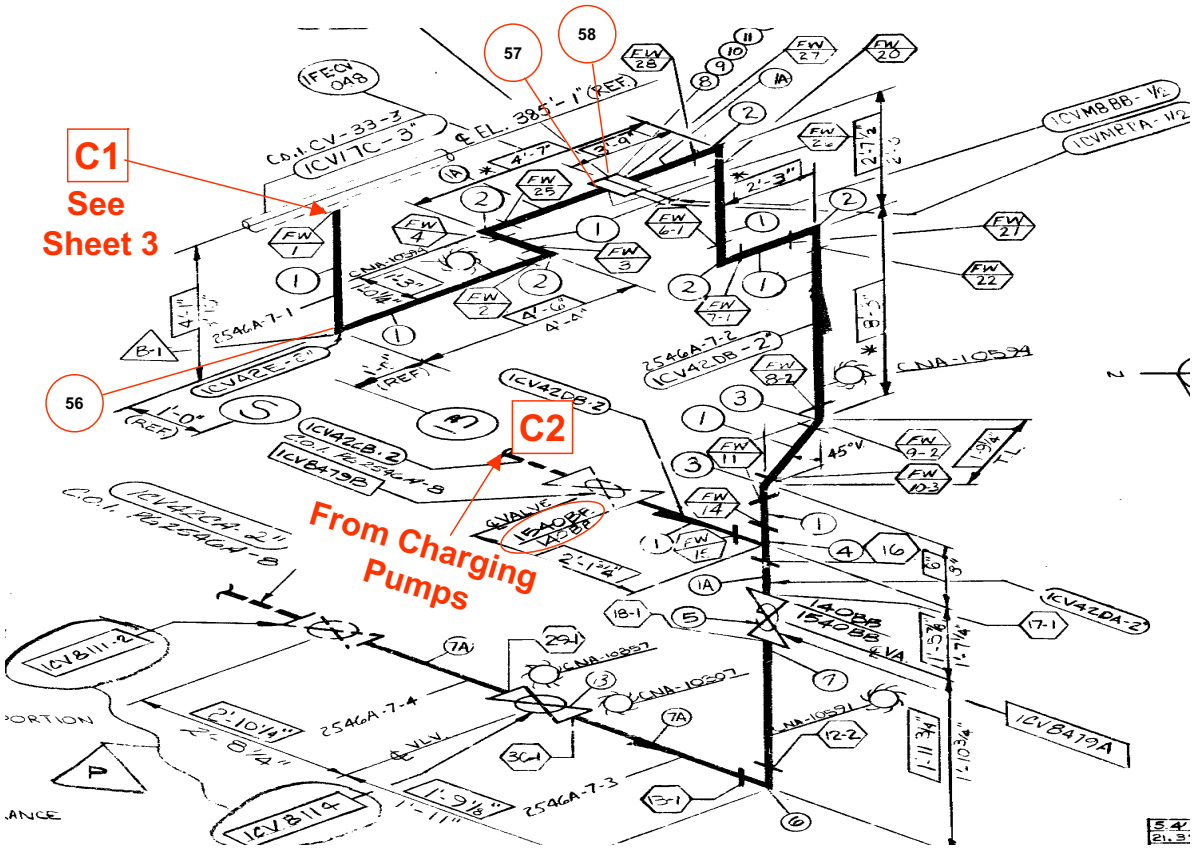

GROUP 36 – CHEMICAL VOLUME AND CONTROL SYSTEM (CVCS)
VCT/RCP Seal Return Piping to Charging Pumps (Sheet 6 of 7)
(Covers Worksheets SS-VCTCVP – 1 thru 70)

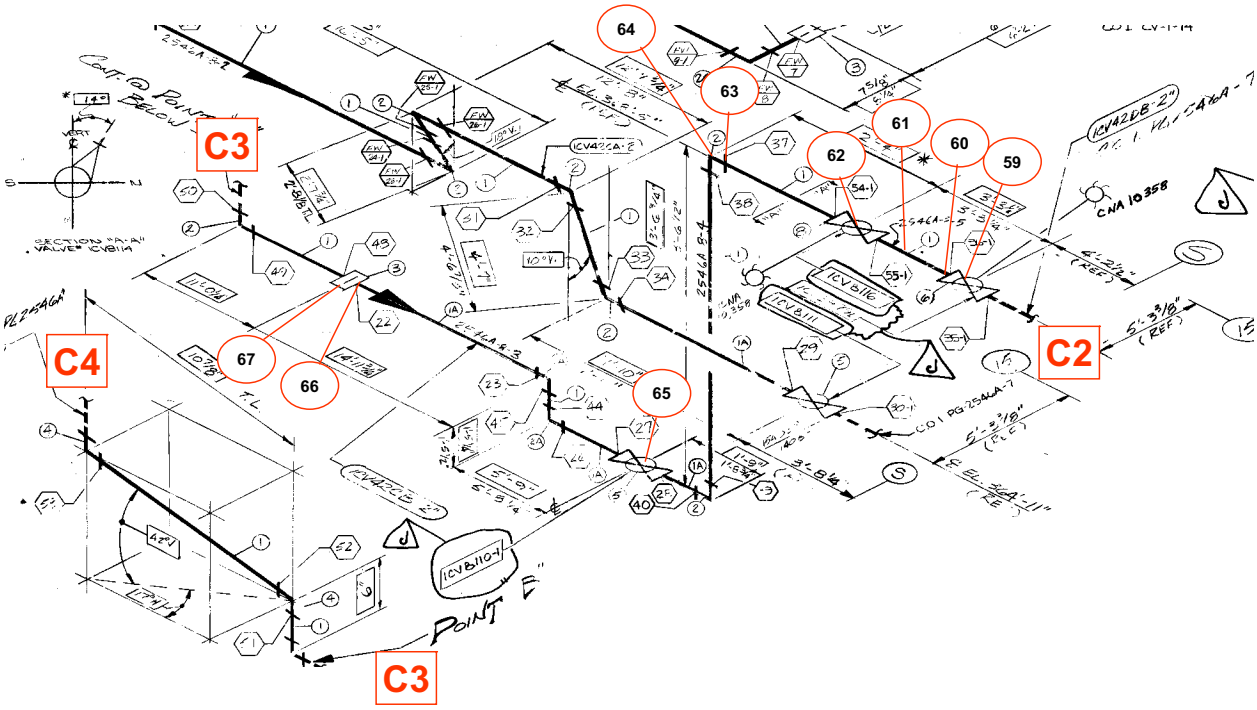

GROUP 36 – CHEMICAL VOLUME AND CONTROL SYSTEM (CVCS)
VCT/RCP Seal Return Piping to Charging Pumps (Sheet 7 of 7)
(Covers Worksheets SS-VCTCVP – 1 thru 70)

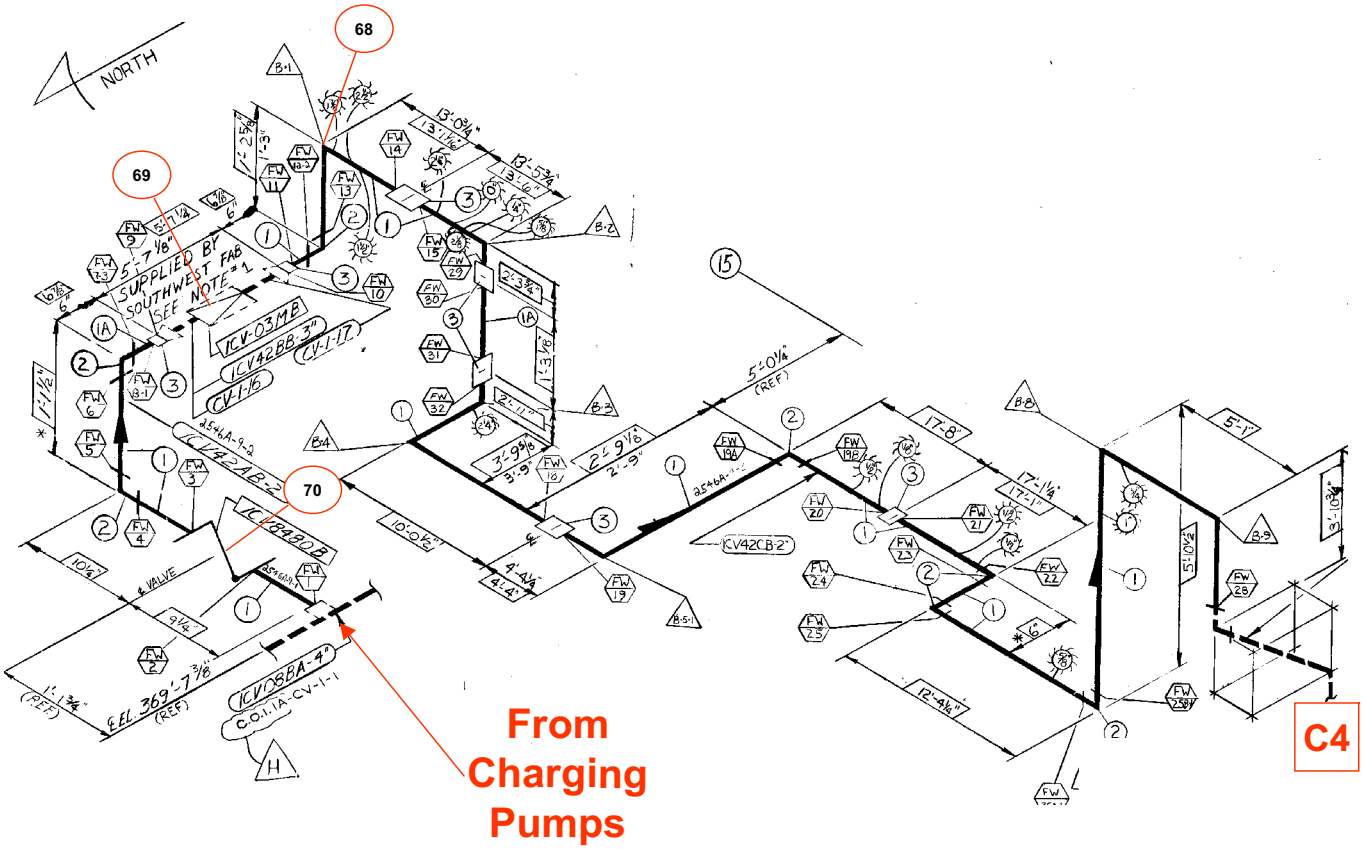

GROUP 37 – CHEMICAL VOLUME AND CONTROL SYSTEM (CVCS)
Charging Pumps to Regenerative HX (Sheet 1 of 4)
(Covers Worksheets SS-CVPRHX – 1 thru 53)

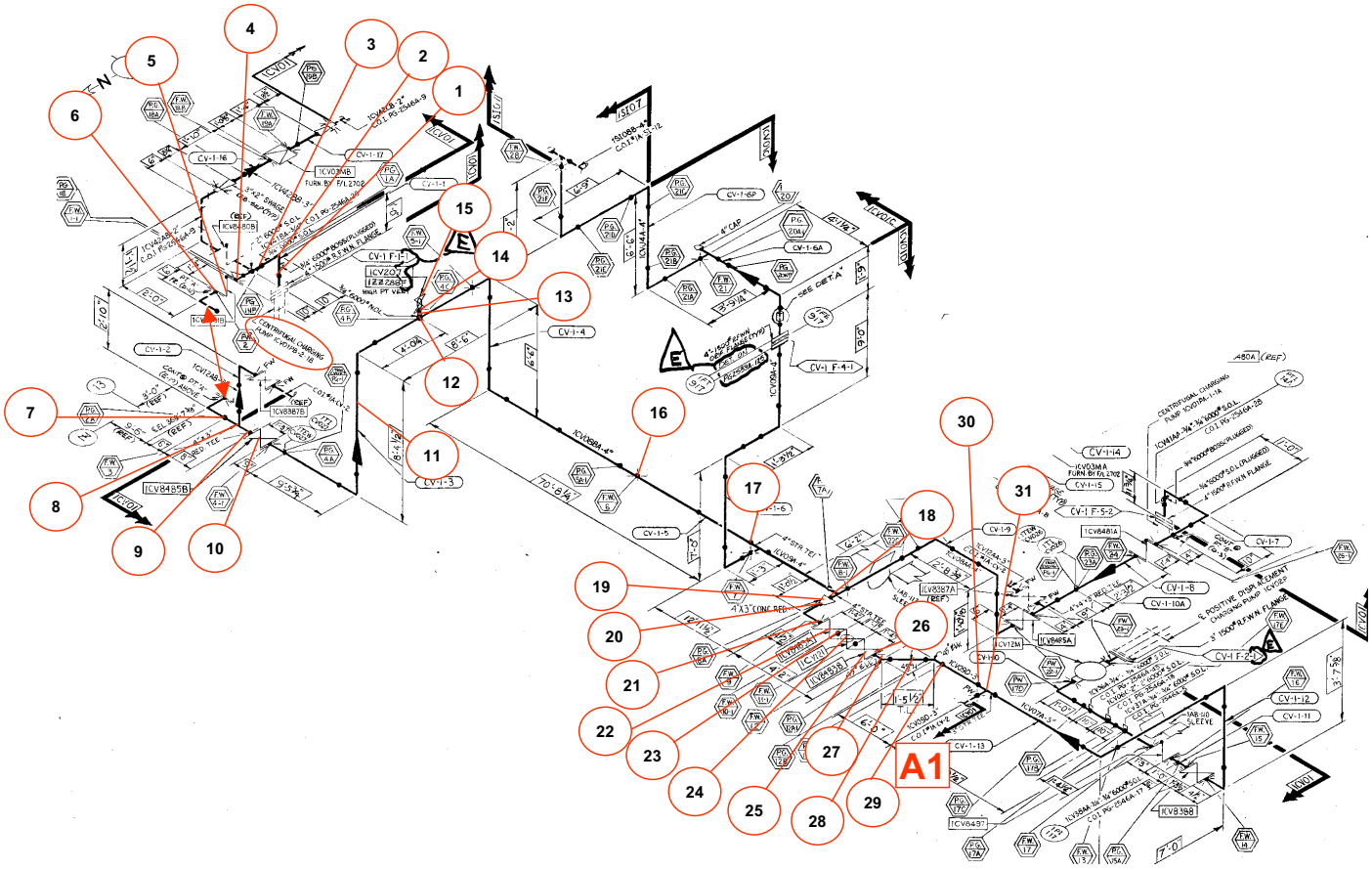

GROUP 37 – CHEMICAL VOLUME AND CONTROL SYSTEM (CVCS)
Charging Pumps to Regenerative HX (Sheet 2 of 4)
(Covers Worksheets SS-CVPRHX – 1 thru 53)

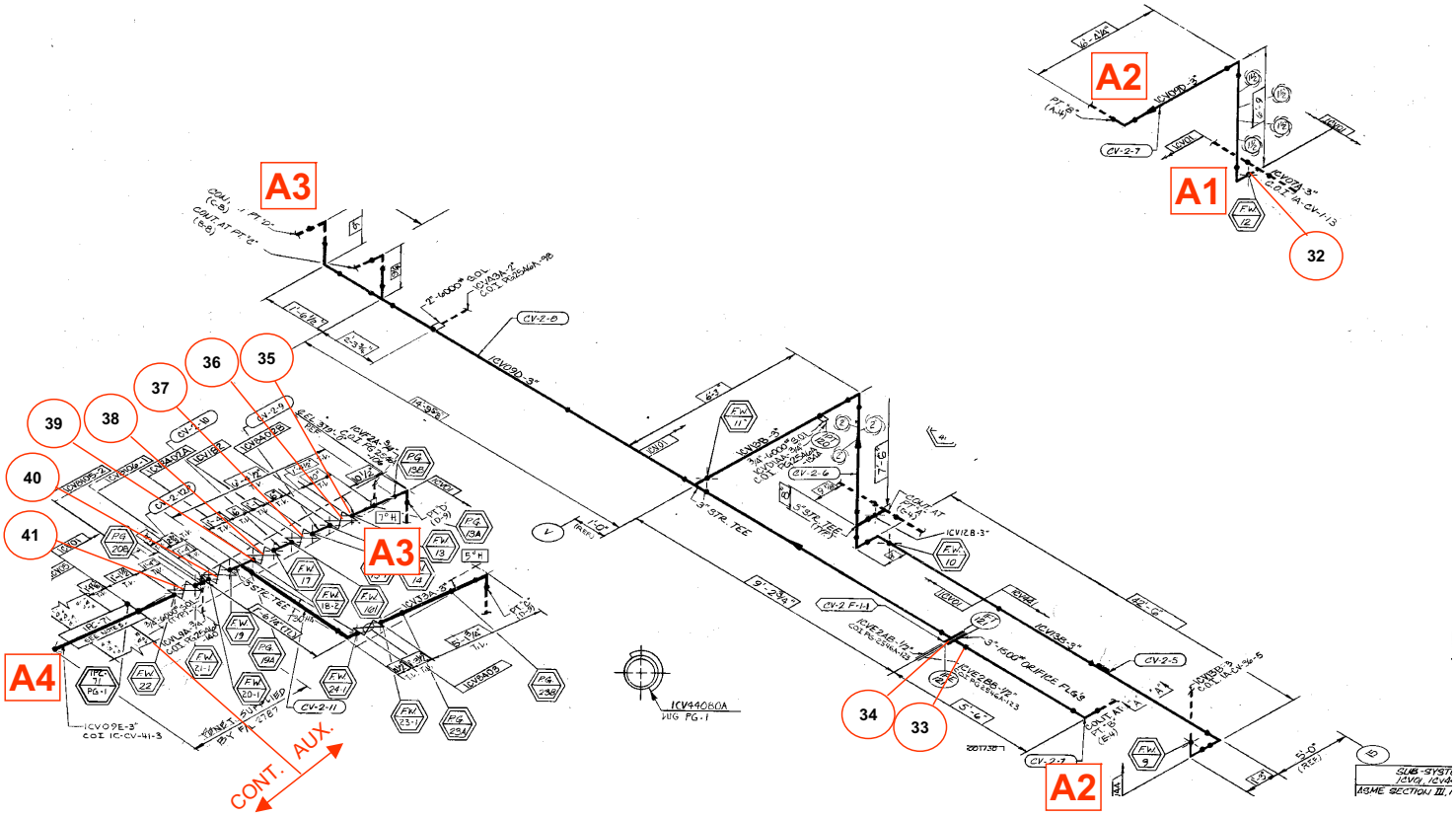

GROUP 37 – CHEMICAL VOLUME AND CONTROL SYSTEM (CVCS)
Charging Pumps to Regenerative HX (Sheet 3 of 4)
(Covers Worksheets SS-CVPRHX – 1 thru 53)

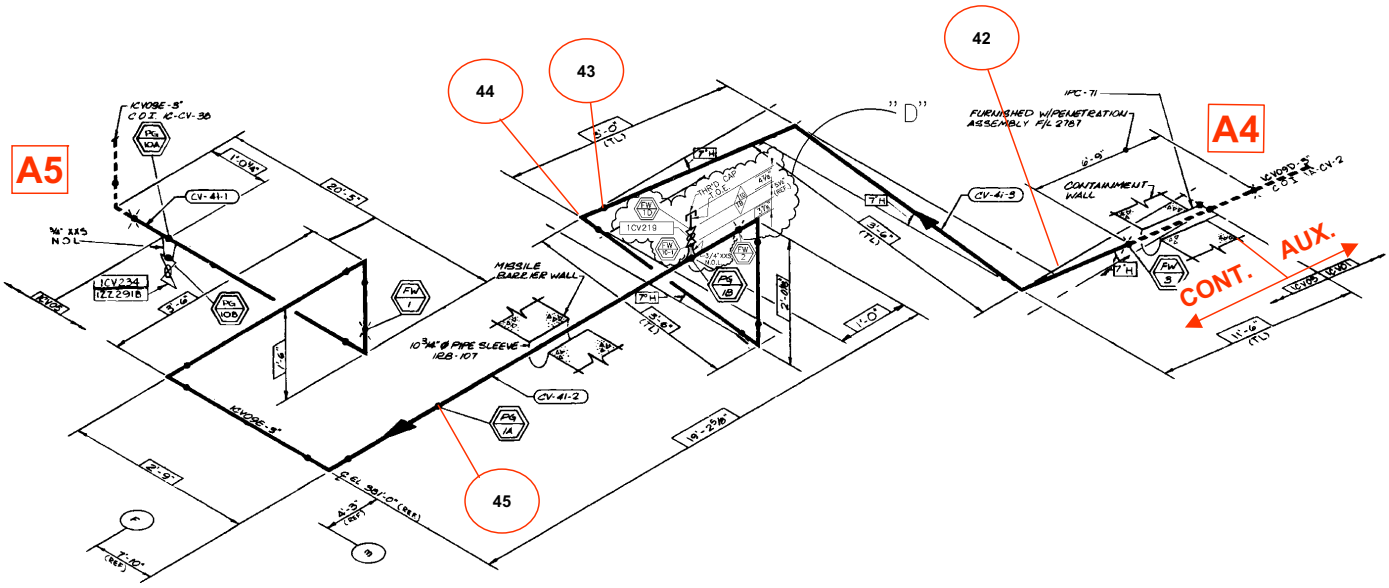

GROUP 37 – CHEMICAL VOLUME AND CONTROL SYSTEM (CVCS)
Charging Pumps to Regenerative HX (Sheet 4 of 4)
(Covers Worksheets SS-CVPRHX – 1 thru 53)

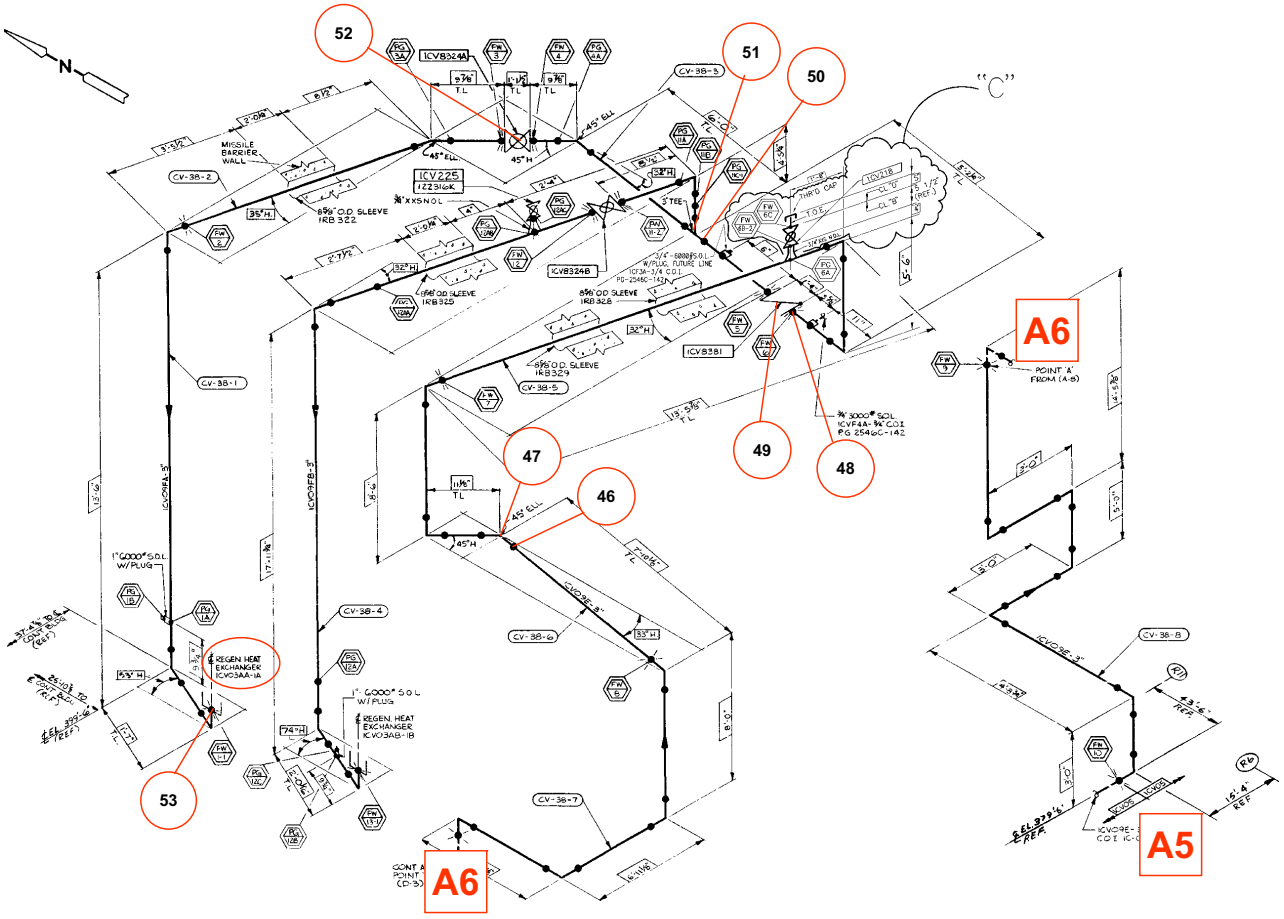

GROUP 38 – CHEMICAL VOLUME AND CONTROL SYSTEM (CVCS)
Regenerative HX to RCS Loop 2 Cold Leg (Sheet 1 of 3)
(Covers Worksheets SS-RHXCL – 1 thru 24)

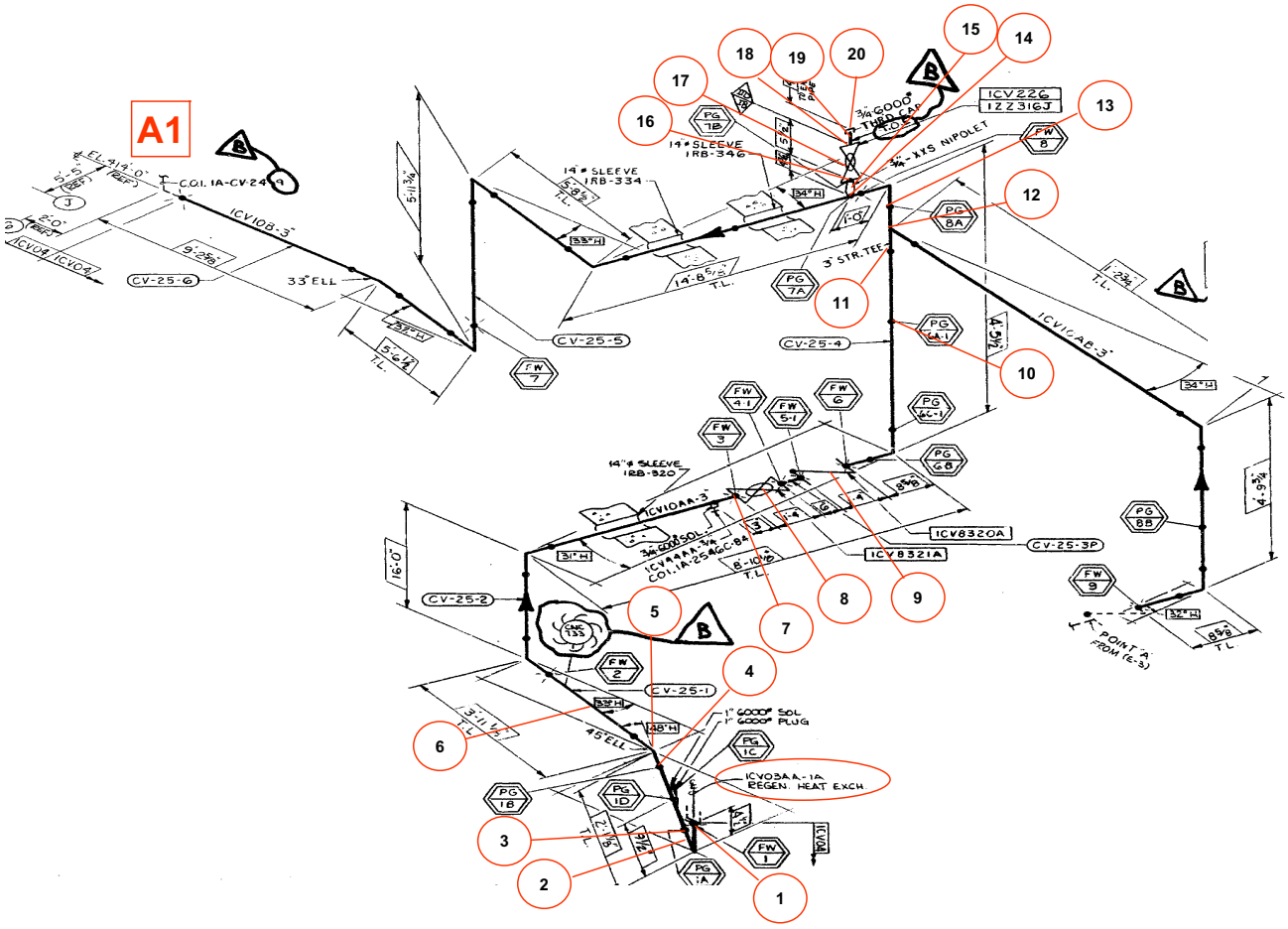

GROUP 38 – CHEMICAL VOLUME AND CONTROL SYSTEM (CVCS)
Regenerative HX to RCS Loop 2 Cold Leg (Sheet 2 of 3)
(Covers Worksheets SS-RHXCL – 1 thru 24)

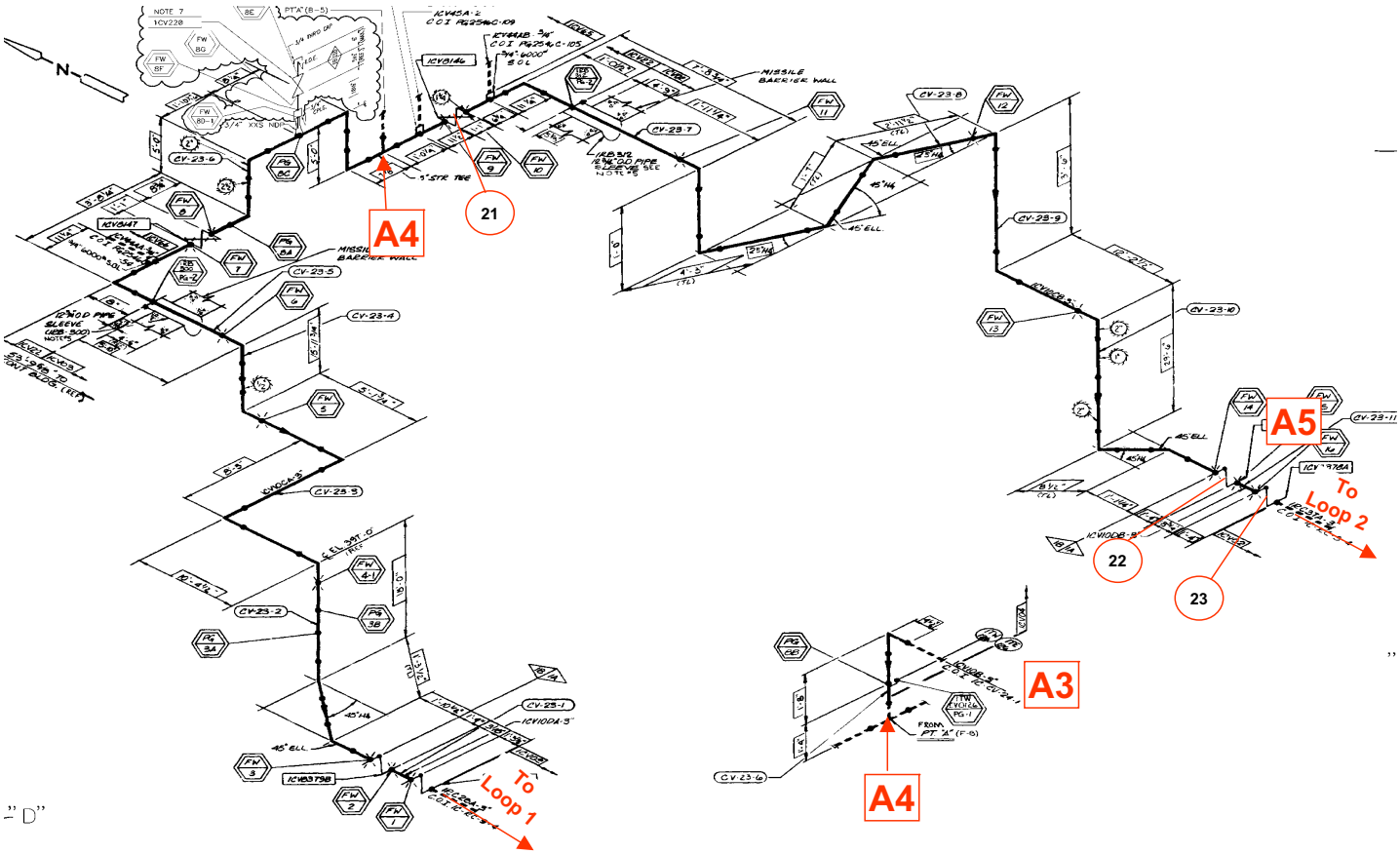

GROUP 38 – CHEMICAL VOLUME AND CONTROL SYSTEM (CVCS)
Regenerative HX to RCS Loop 2 Cold Leg (Sheet 3 of 3)
(Covers Worksheets SS-RHXCL – 1 thru 24)

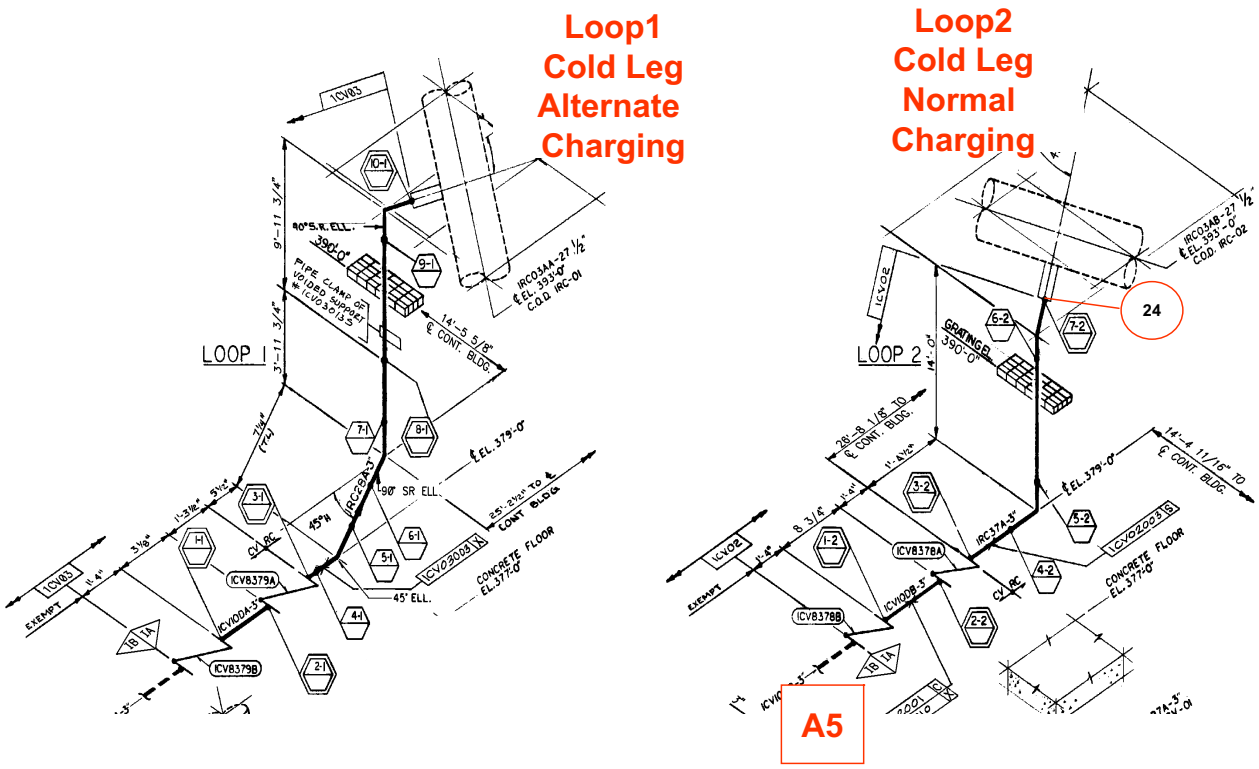

GROUP 39 – CHEMICAL VOLUME AND CONTROL SYSTEM (CVCS)
Injection Filter to Reactor Coolant Pump Seals (Sheet 1 of 7)
(Covers Worksheets SS-RCPINJ– 1 thru 65)

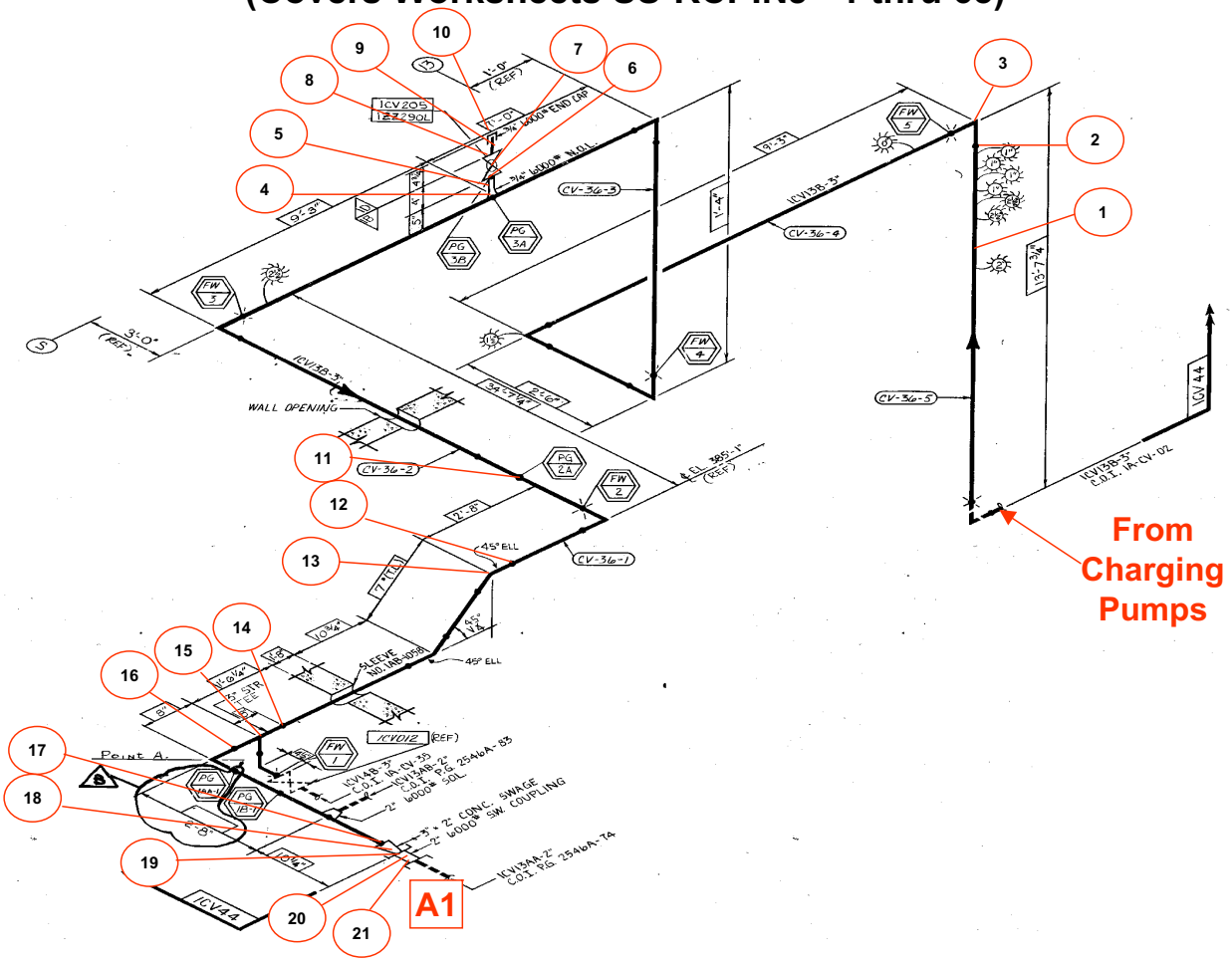

GROUP 39 – CHEMICAL VOLUME AND CONTROL SYSTEM (CVCS)
Injection Filter to Reactor Coolant Pump Seals (Sheet 2 of 7)
(Covers Worksheets SS-RCPINJ– 1 thru 65)

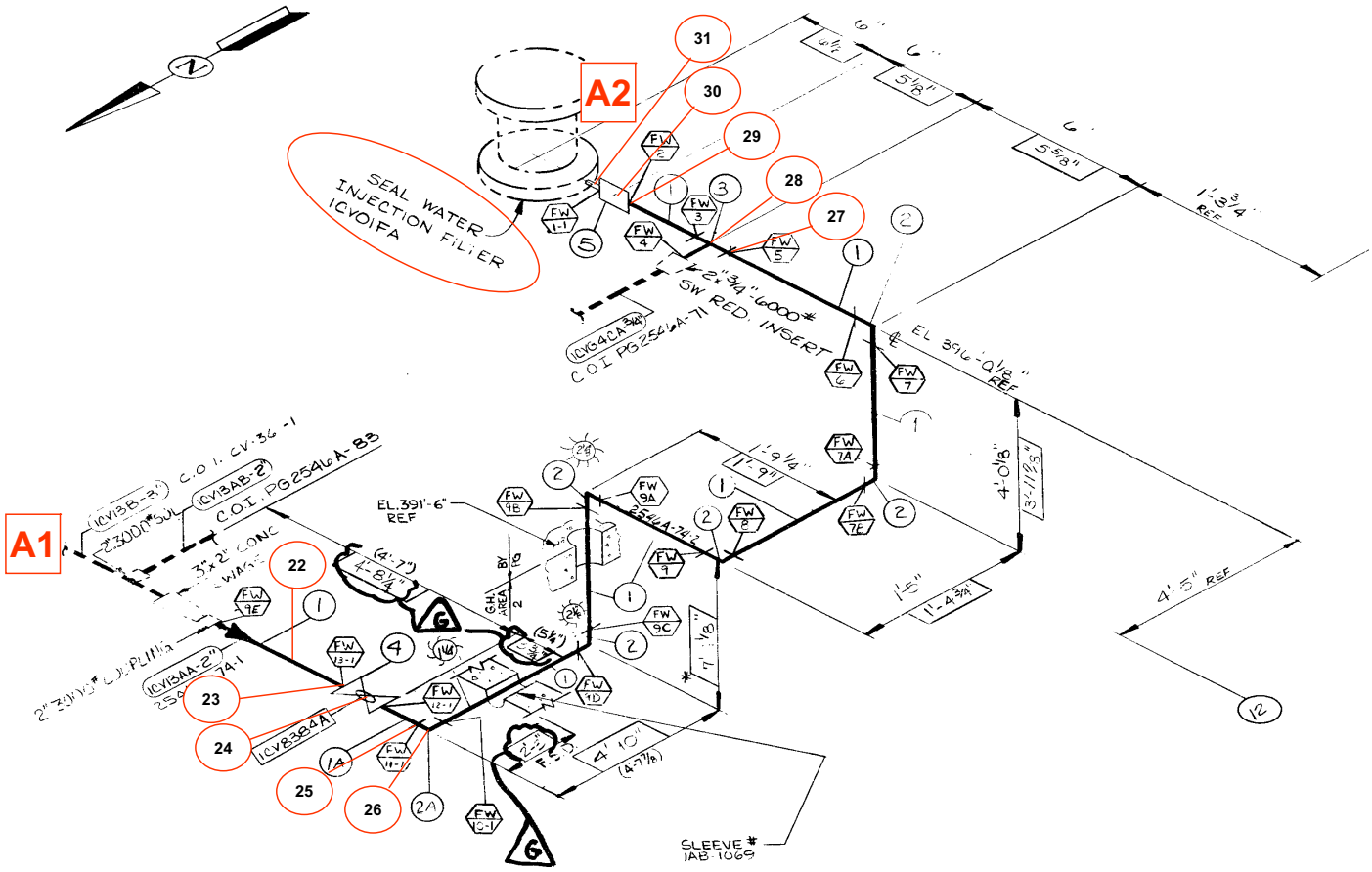

GROUP 39 – CHEMICAL VOLUME AND CONTROL SYSTEM (CVCS)
Injection Filter to Reactor Coolant Pump Seals (Sheet 3 of 7)
(Covers Worksheets SS-RCPINJ– 1 thru 65)

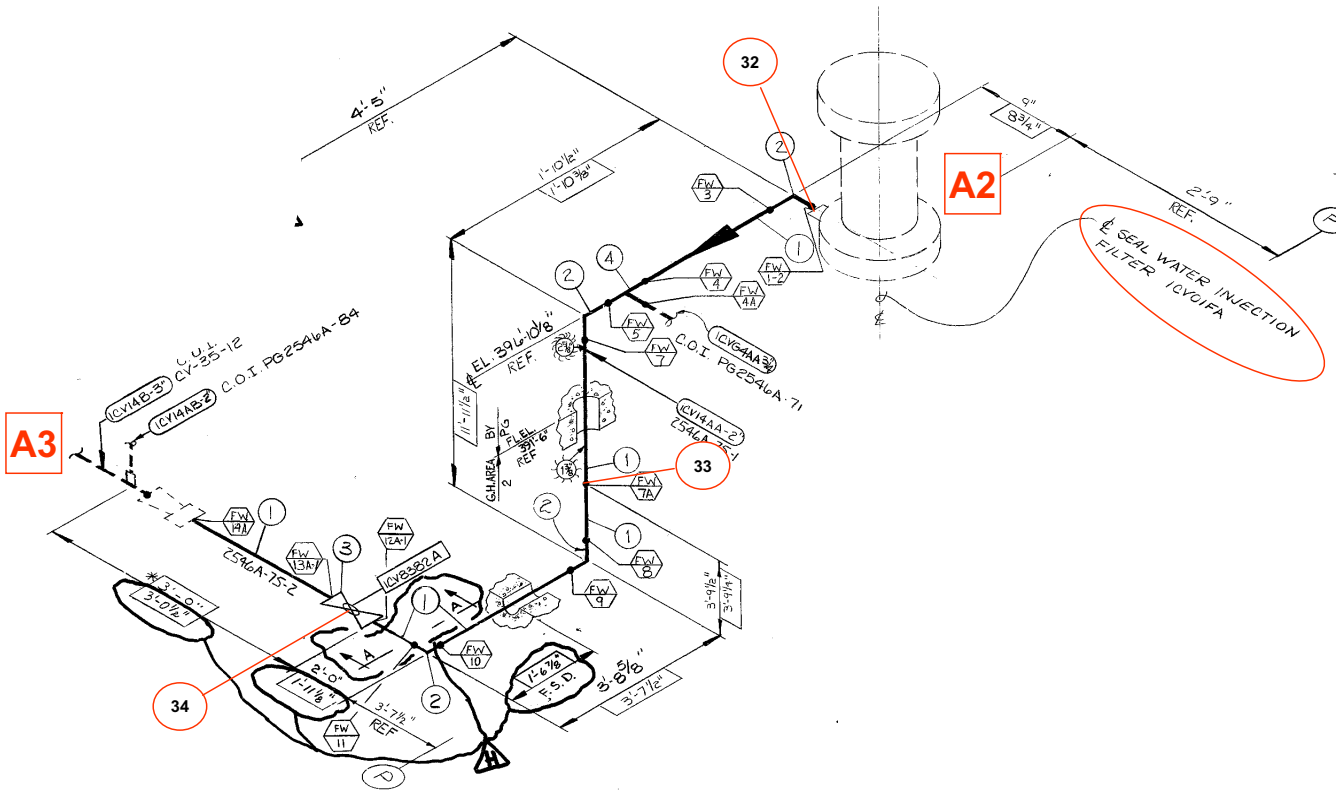

GROUP 39 – CHEMICAL VOLUME AND CONTROL SYSTEM (CVCS)
Injection Filter to Reactor Coolant Pump Seals (Sheet 4 of 7)
(Covers Worksheets SS-RCPINJ– 1 thru 65)

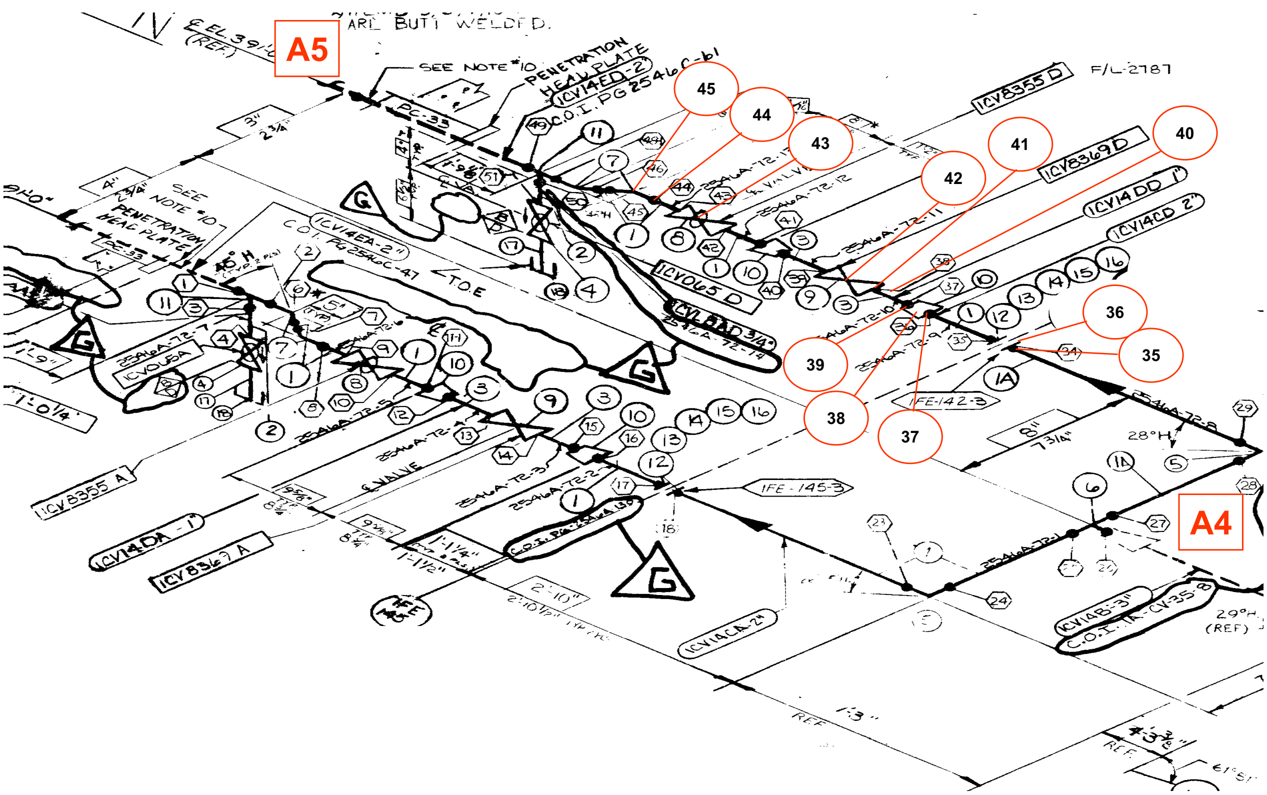

GROUP 39 – CHEMICAL VOLUME AND CONTROL SYSTEM (CVCS)
Injection Filter to Reactor Coolant Pump Seals (Sheet 5 of 7)
(Covers Worksheets SS-RCPINJ– 1 thru 65)

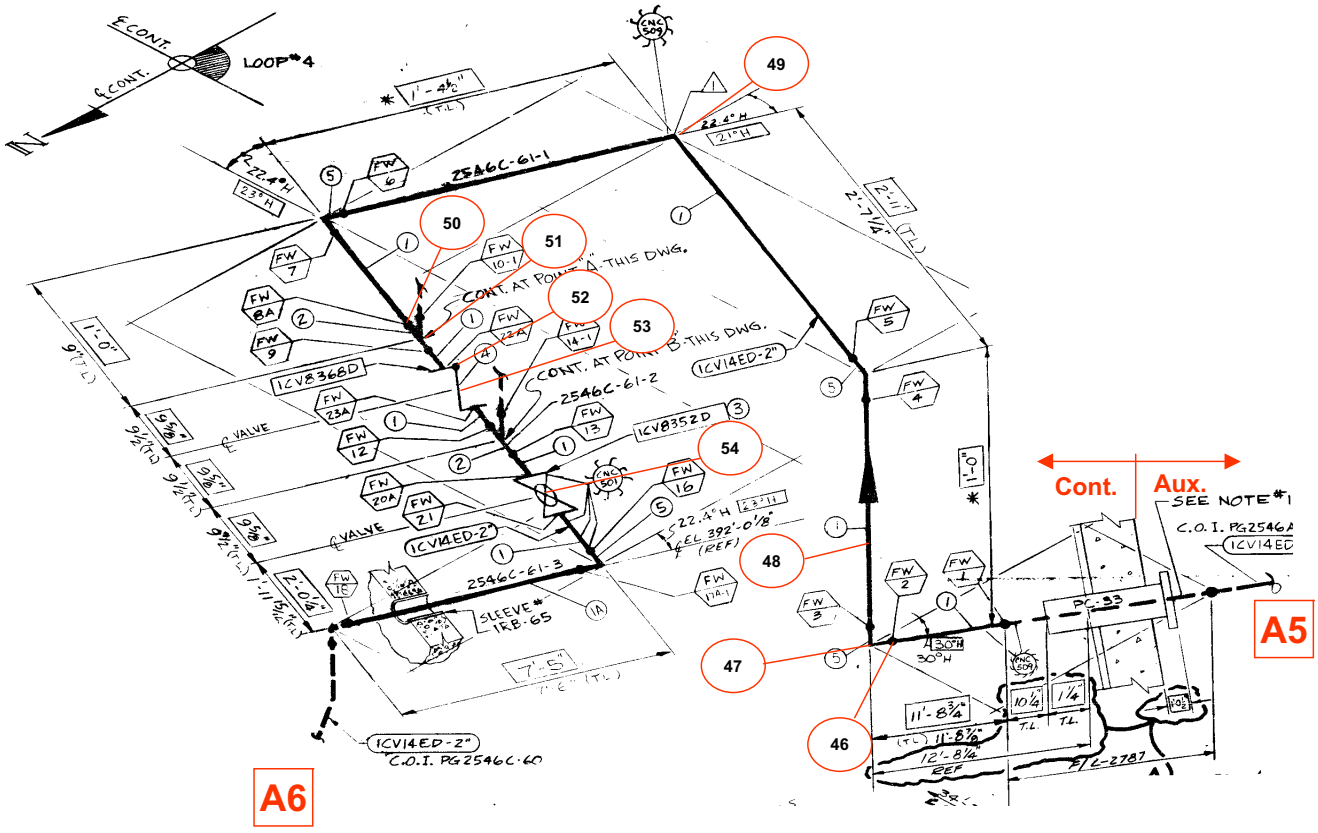

GROUP 39 – CHEMICAL VOLUME AND CONTROL SYSTEM (CVCS)
Injection Filter to Reactor Coolant Pump Seals (Sheet 6 of 7)
(Covers Worksheets SS-RCPINJ– 1 thru 65)

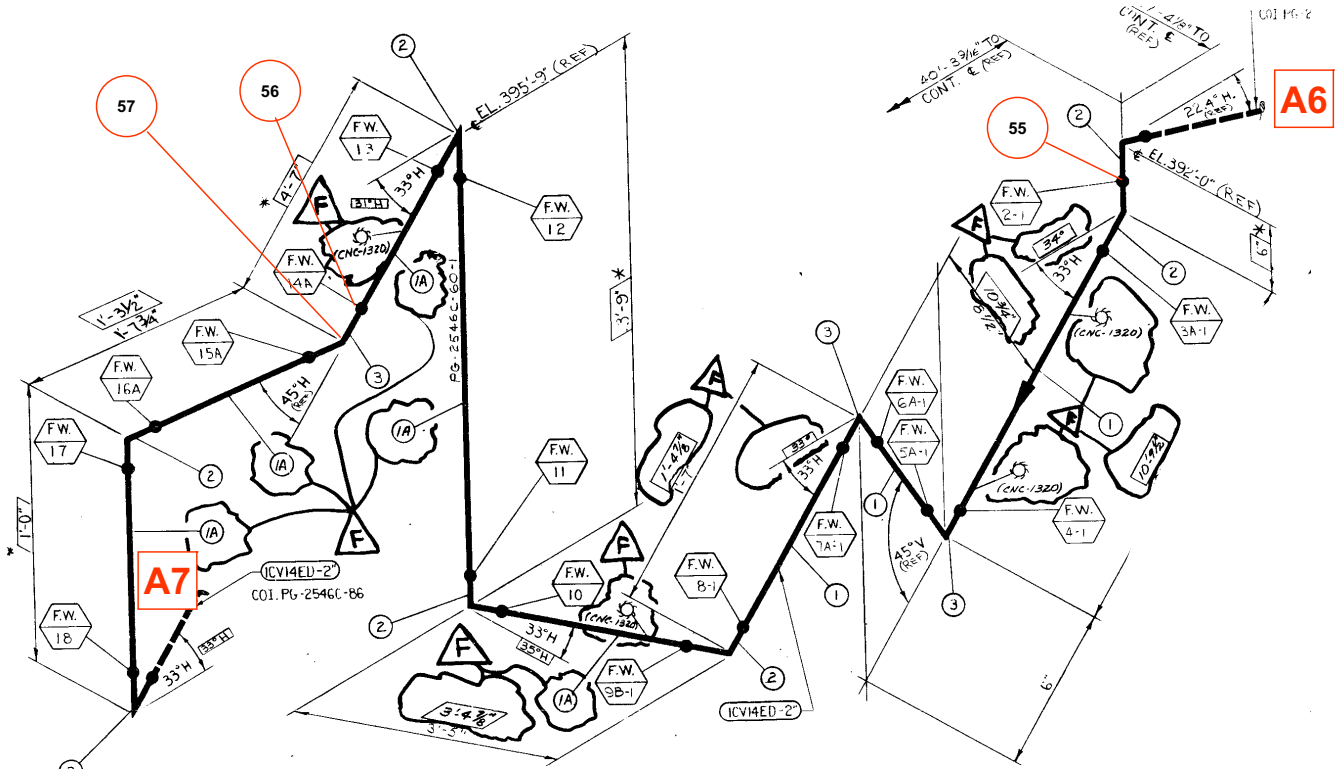

GROUP 39 – CHEMICAL VOLUME AND CONTROL SYSTEM (CVCS)
Injection Filter to Reactor Coolant Pump Seals (Sheet 7 of 7)
(Covers Worksheets SS-RCPINJ– 1 thru 65)

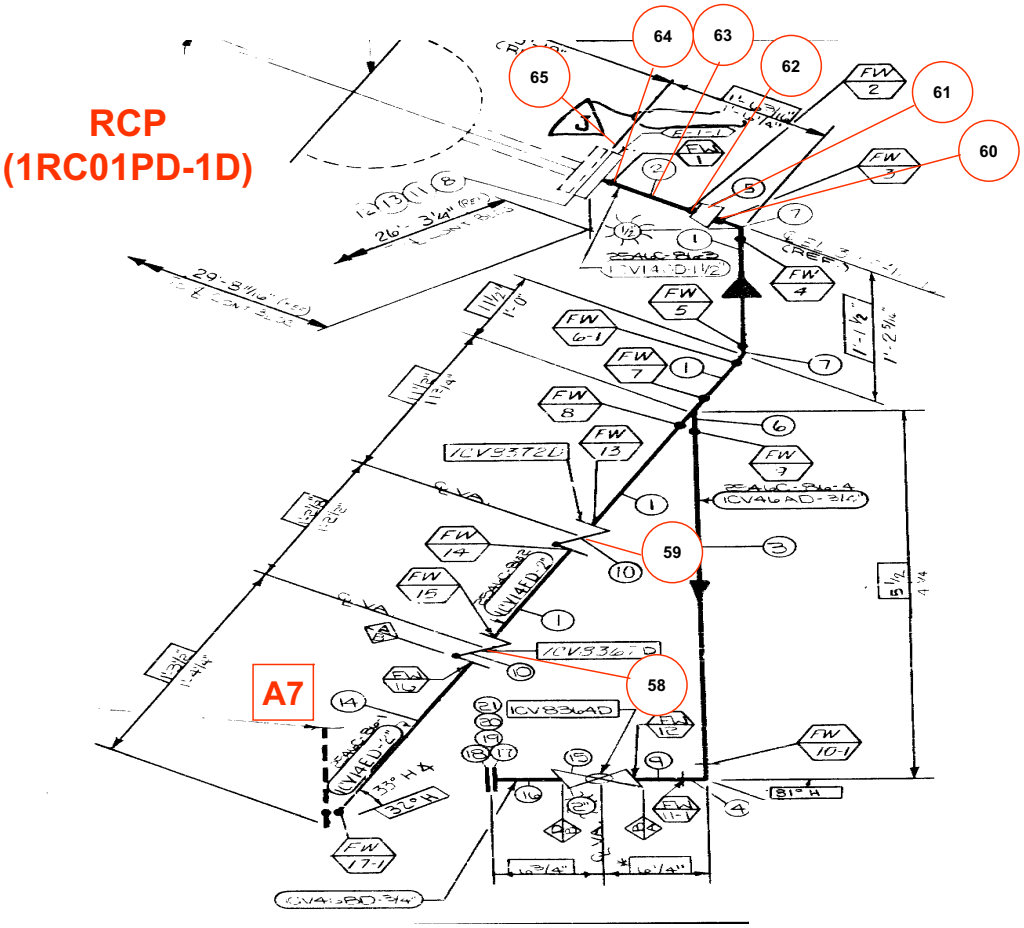

GROUP 40 – CHEMICAL VOLUME AND CONTROL SYSTEM (CVCS)
Reactor Coolant Pump Seals to Return Filter (Sheet 1 of 7)
(Covers Worksheets SS-RCPRET – 1 thru 46)

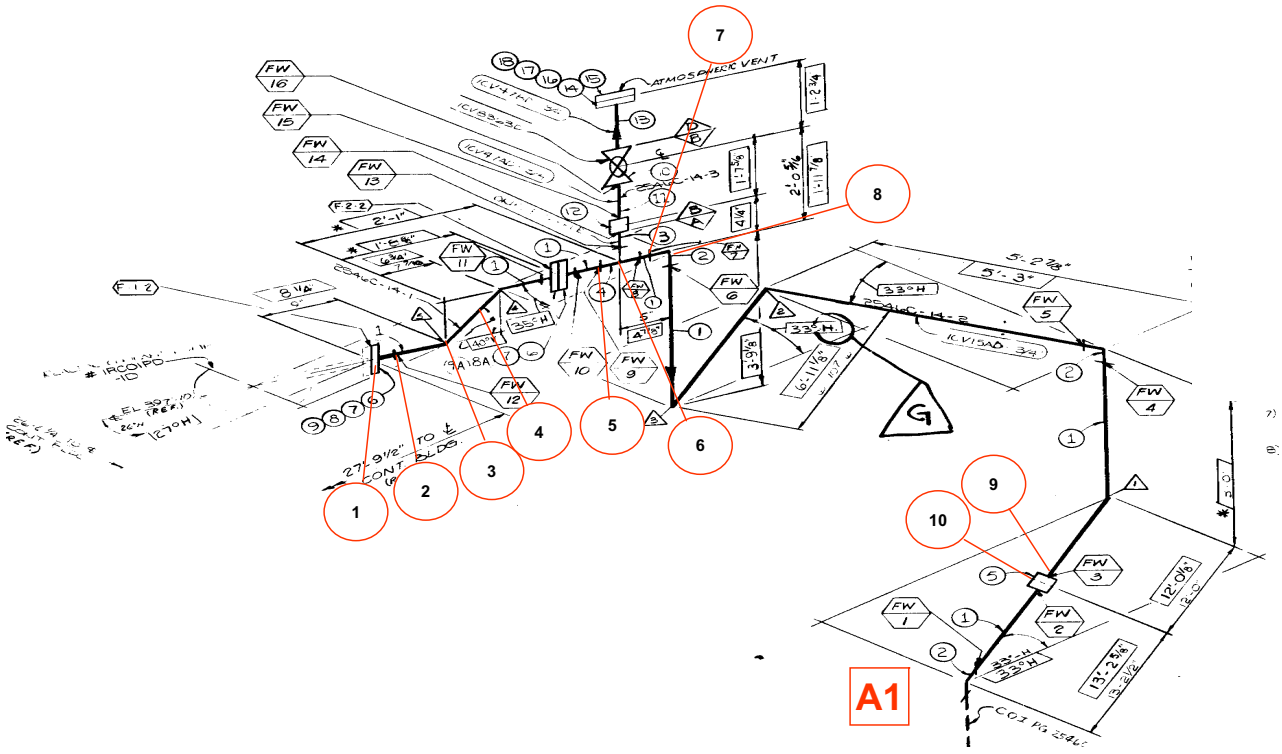

GROUP 40 – CHEMICAL VOLUME AND CONTROL SYSTEM (CVCS)
Reactor Coolant Pump Seals to Return Filter (Sheet 2 of 7)
(Covers Worksheets SS-RCPRET – 1 thru 46)

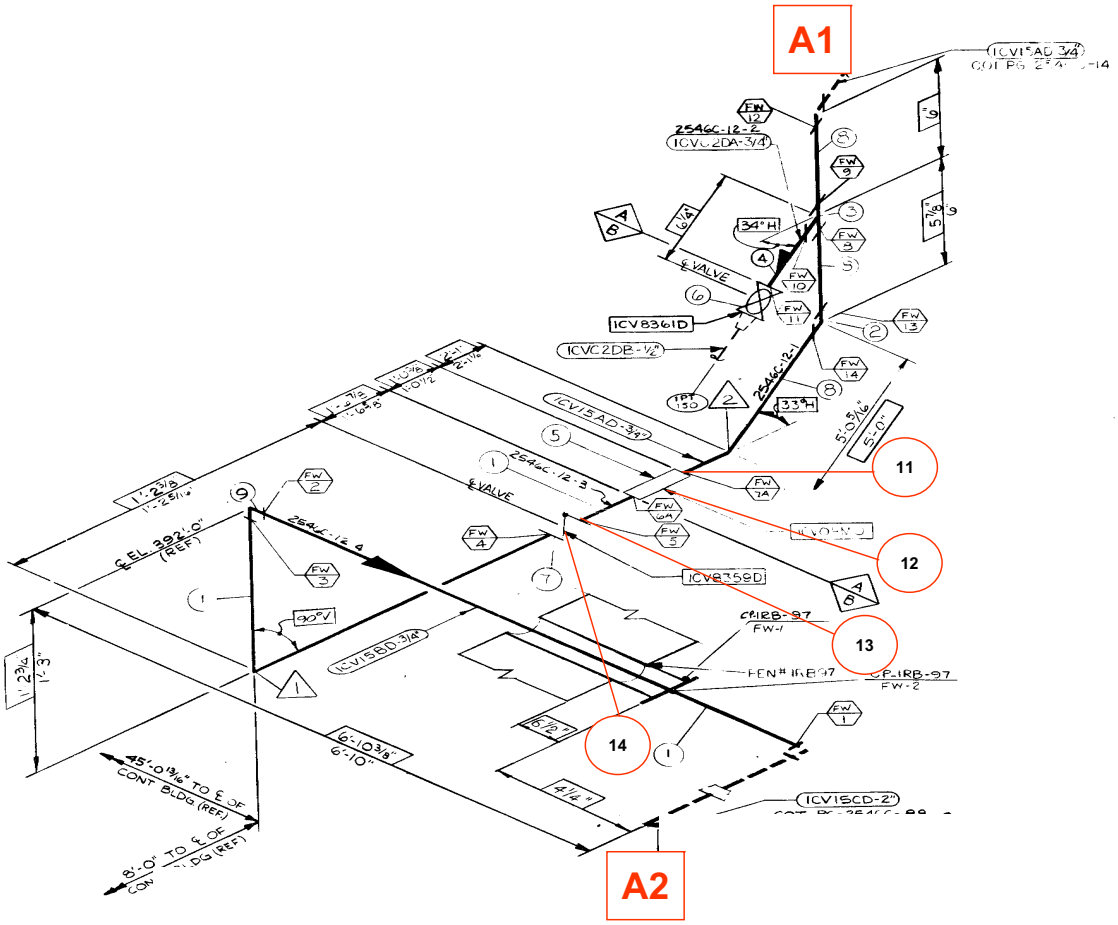

GROUP 40 – CHEMICAL VOLUME AND CONTROL SYSTEM (CVCS)
Reactor Coolant Pump Seals to Return Filter (Sheet 3 of 7)
(Covers Worksheets SS-RCPRET – 1 thru 46)

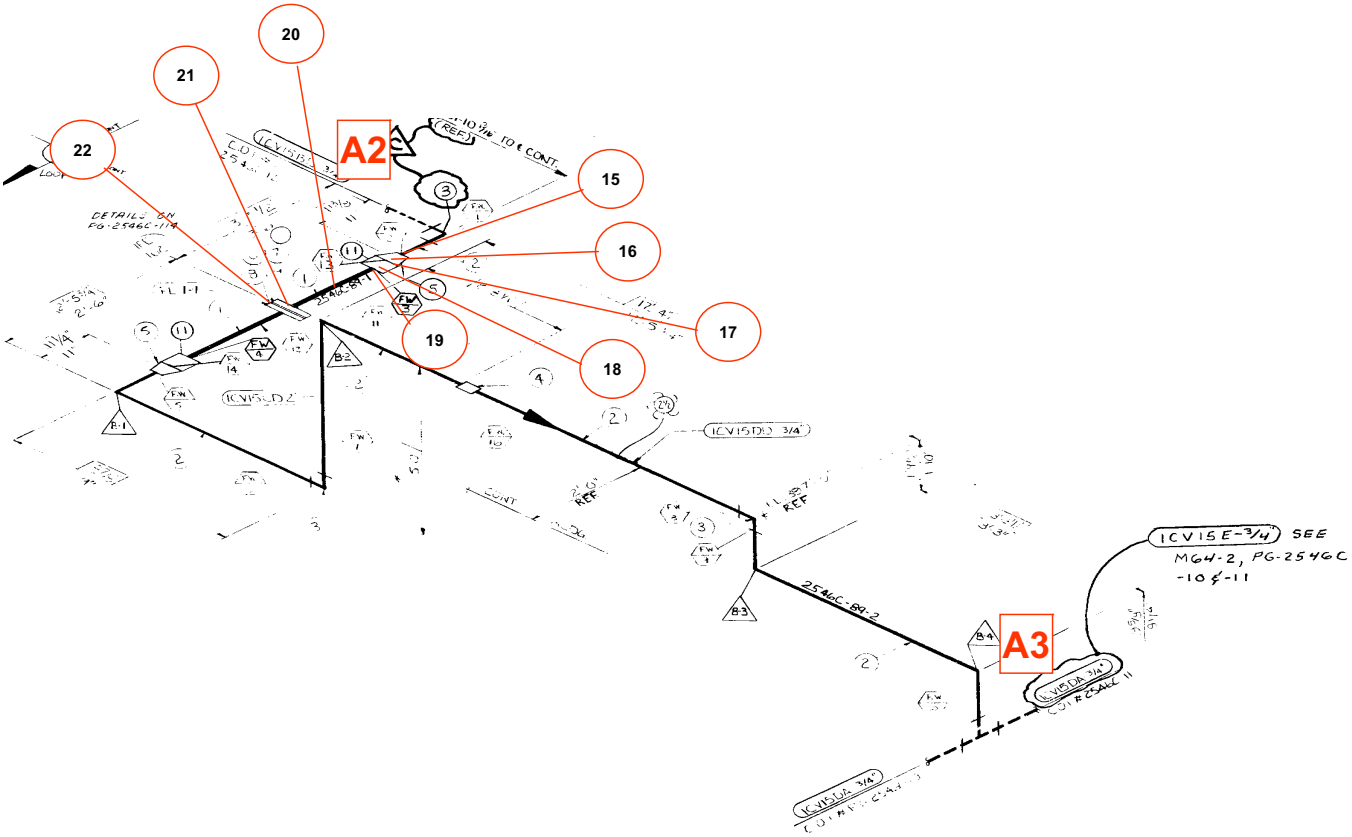

GROUP 40 – CHEMICAL VOLUME AND CONTROL SYSTEM (CVCS)
Reactor Coolant Pump Seals to Return Filter (Sheet 4 of 7)
(Covers Worksheets SS-RCPRET – 1 thru 46)

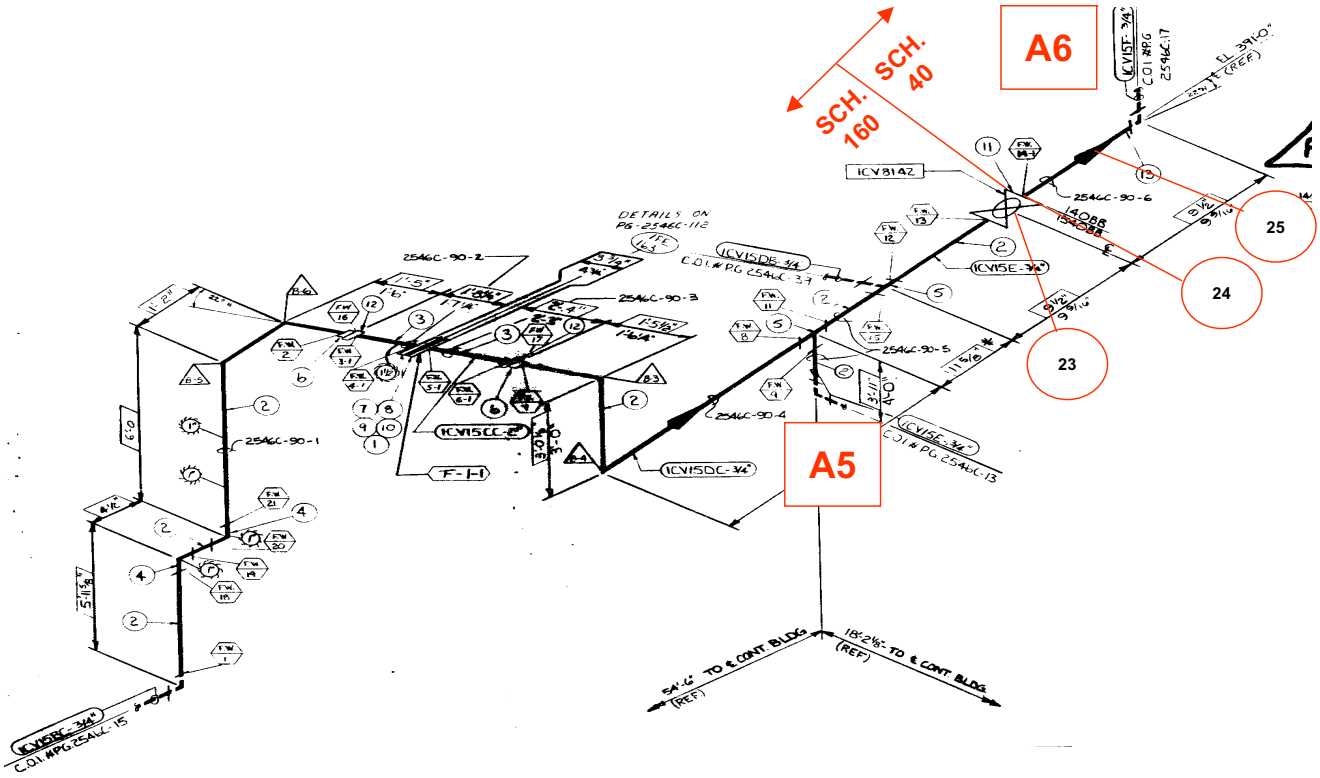

GROUP 40 – CHEMICAL VOLUME AND CONTROL SYSTEM (CVCS)
Reactor Coolant Pump Seals to Return Filter (Sheet 5 of 7)
(Covers Worksheets SS-RCPRET – 1 thru 46)

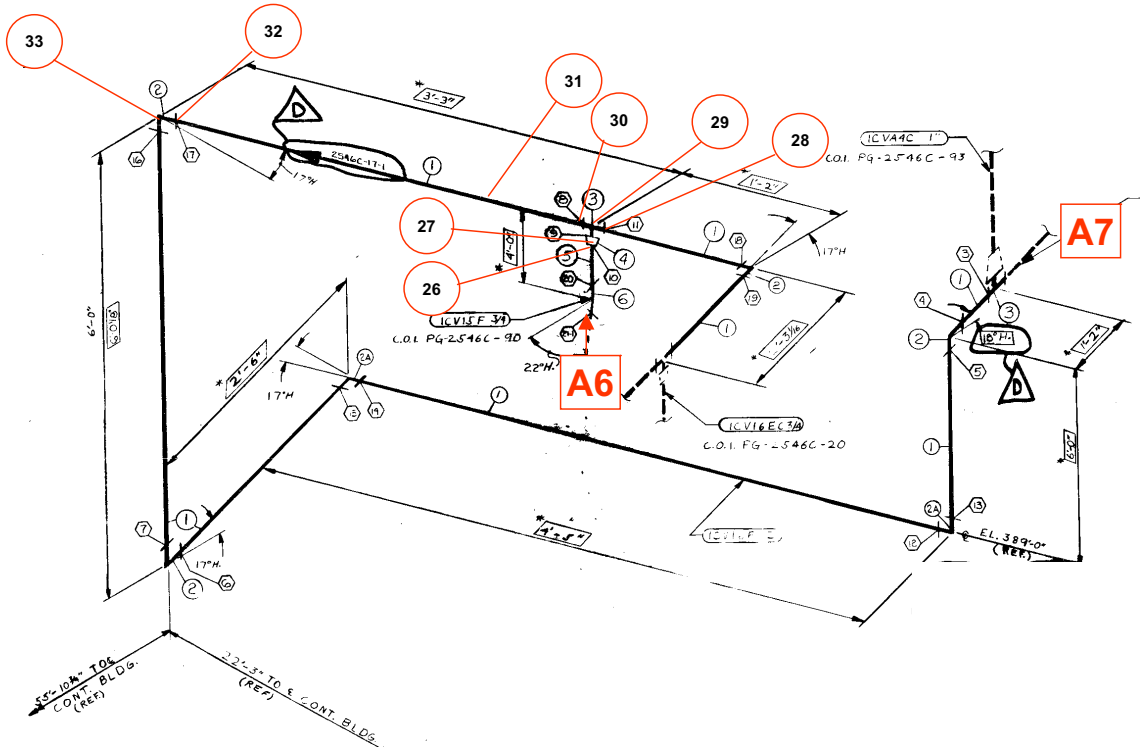

GROUP 40 – CHEMICAL VOLUME AND CONTROL SYSTEM (CVCS)
Reactor Coolant Pump Seals to Return Filter (Sheet 6 of 7)
(Covers Worksheets SS-RCPRET – 1 thru 46)

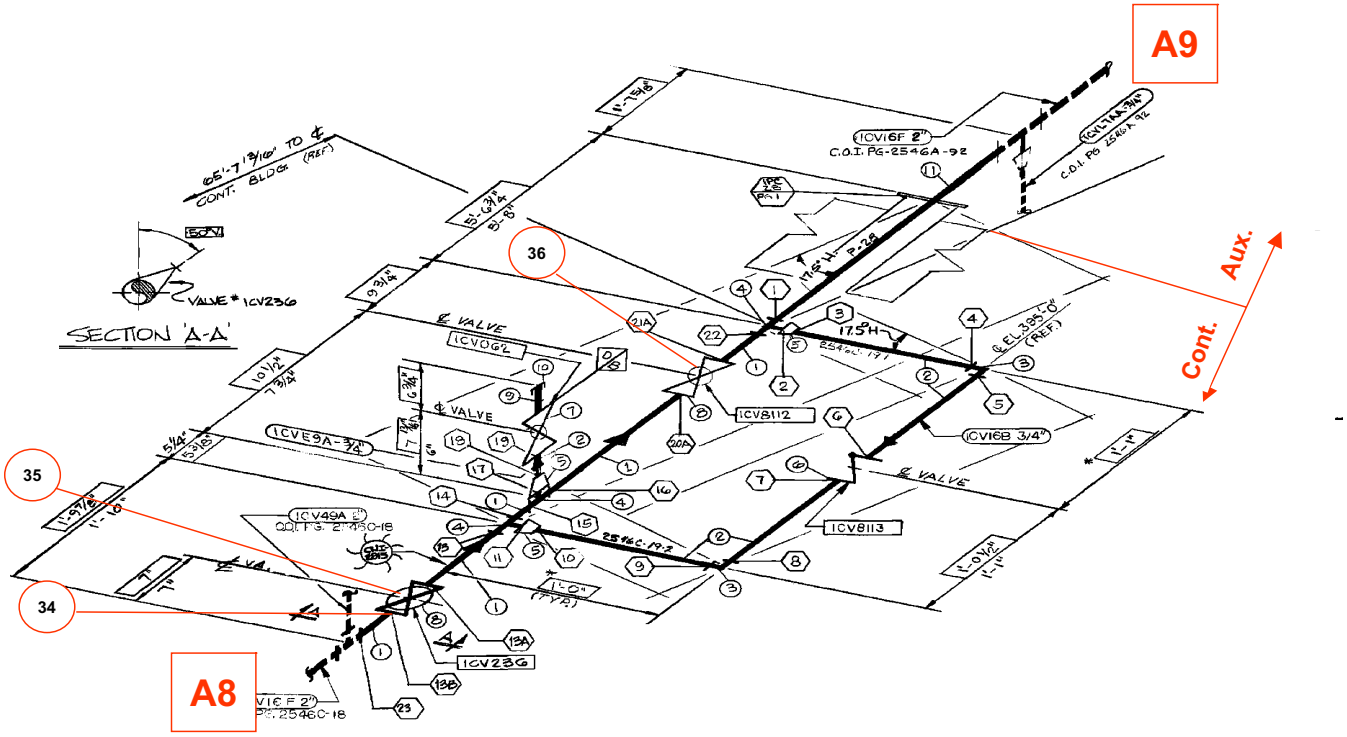

GROUP 40 – CHEMICAL VOLUME AND CONTROL SYSTEM (CVCS)
Reactor Coolant Pump Seals to Return Filter (Sheet 7 of 7)
(Covers Worksheets SS-RCPRET – 1 thru 46)

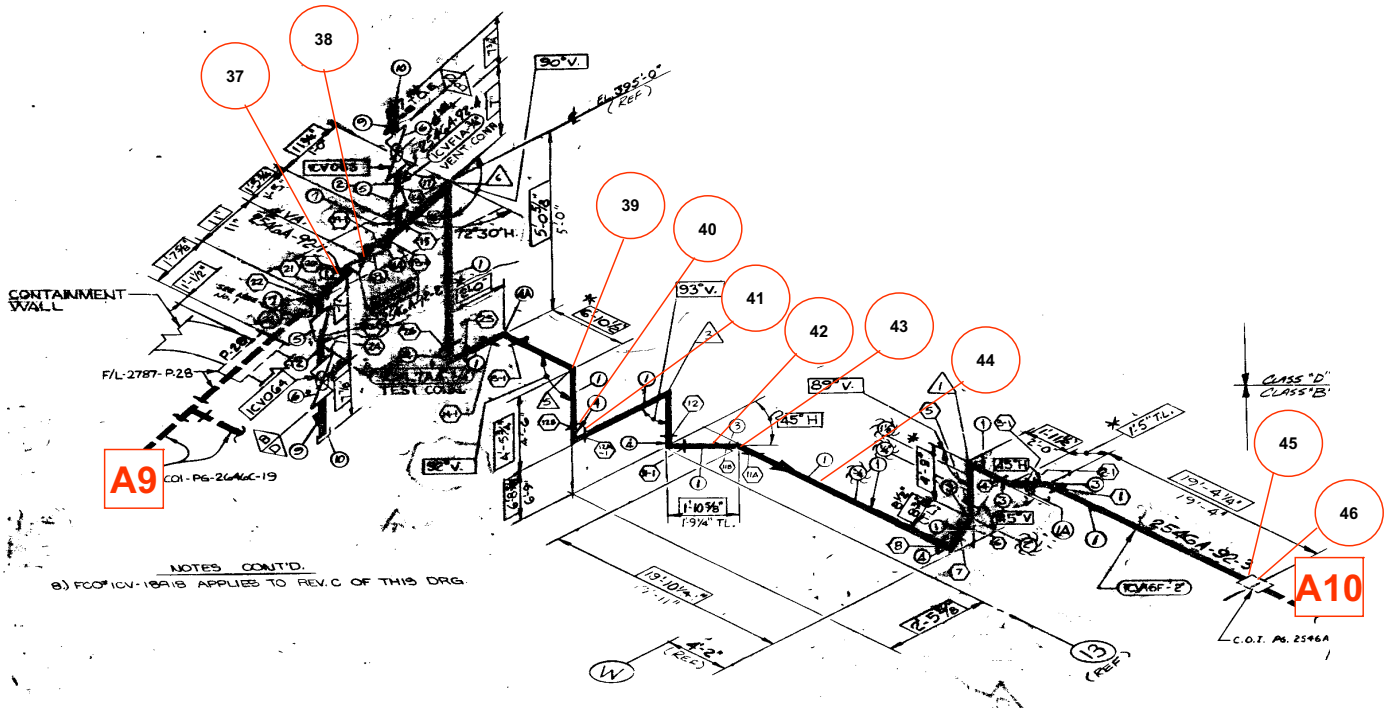

GROUP 41 – COMPONENT COOLING WATER PIPING
Surge Tank to CCW HX (Sheet 1 of 8)
(Covers Worksheets SS-CCWHX – 1 thru 72)

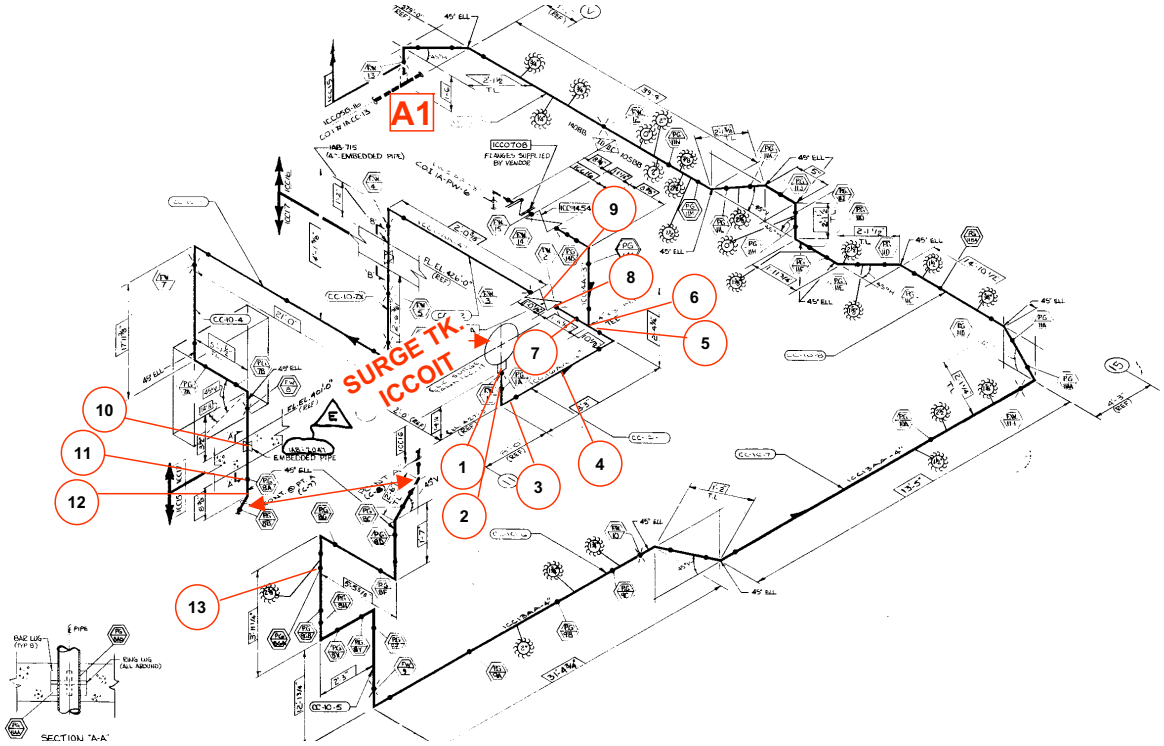

GROUP 41 – COMPONENT COOLING WATER PIPING
Surge Tank to CCW HX (Sheet 2 of 8)
(Covers Worksheets SS-CCWHX – 1 thru 72)

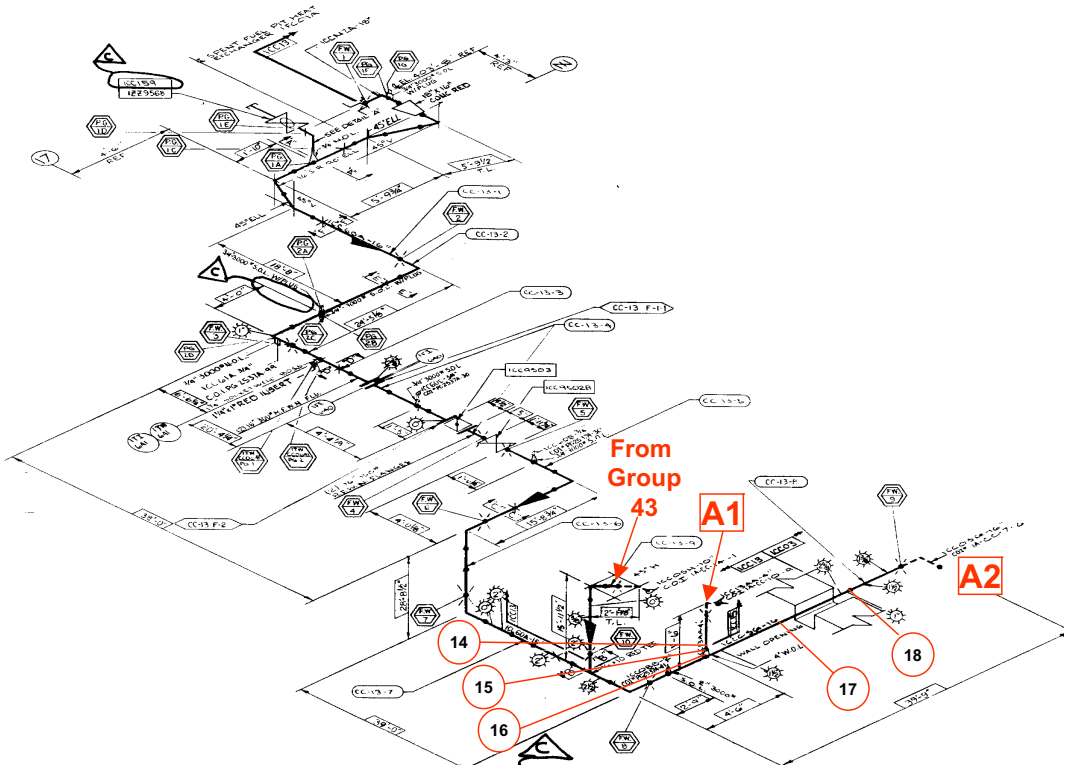

GROUP 41 – COMPONENT COOLING WATER PIPING
Surge Tank to CCW HX (Sheet 3 of 8)
(Covers Worksheets SS-CCWHX – 1 thru 72)

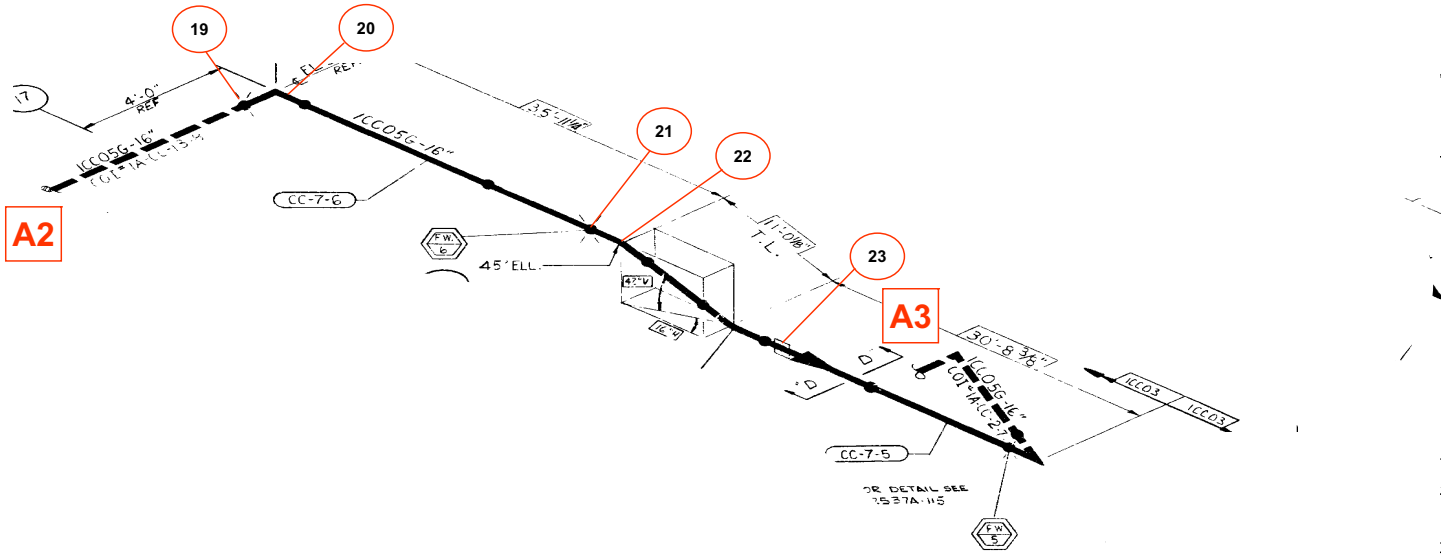

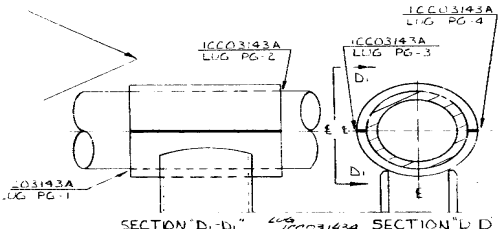

GROUP 41 – COMPONENT COOLING WATER PIPING
Surge Tank to CCW HX (Sheet 4 of 8)
(Covers Worksheets SS-CCWHX – 1 thru 72)

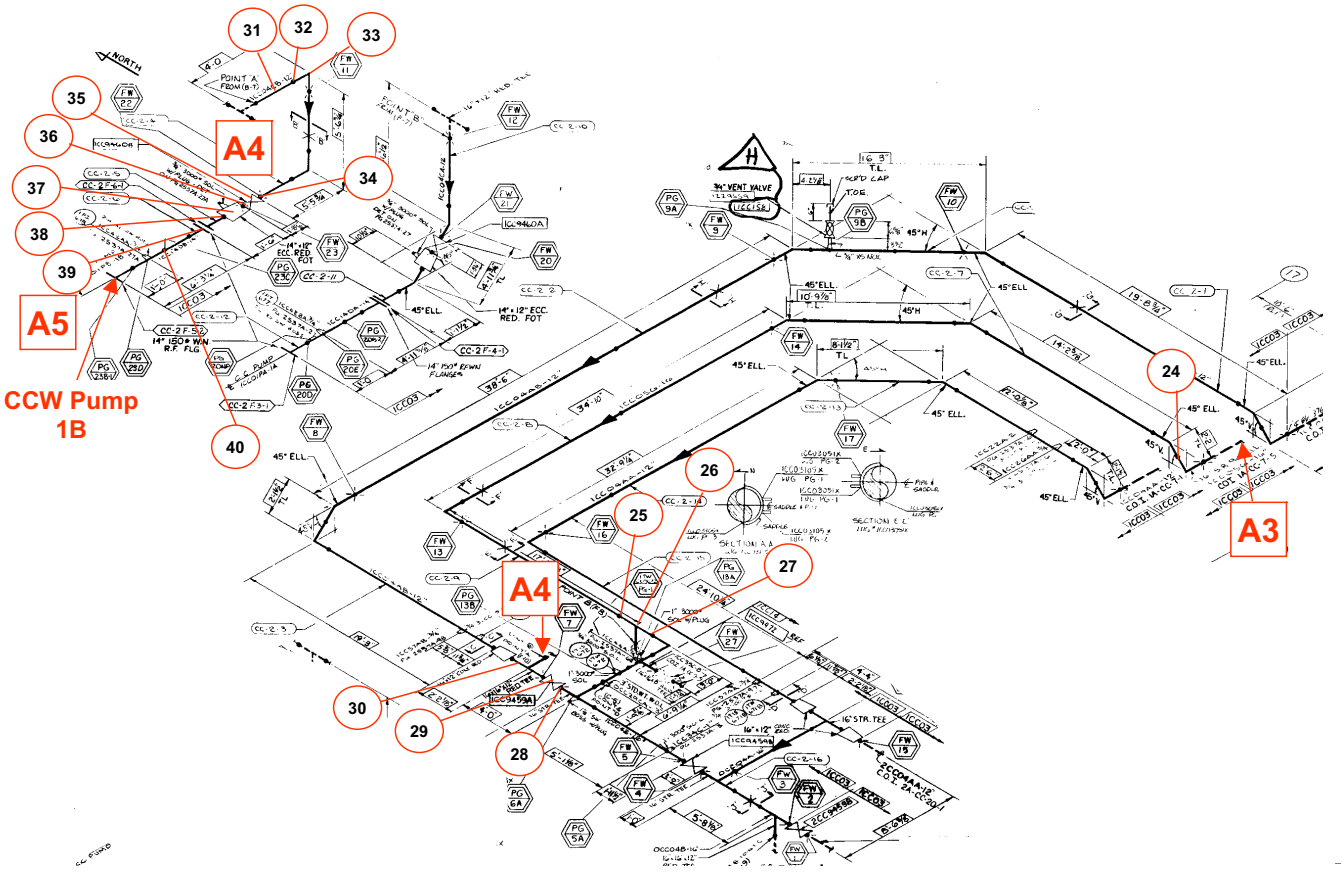

GROUP 41 – COMPONENT COOLING WATER PIPING
Surge Tank to CCW HX (Sheet 5 of 8)
(Covers Worksheets SS-CCWHX – 1 thru 72)

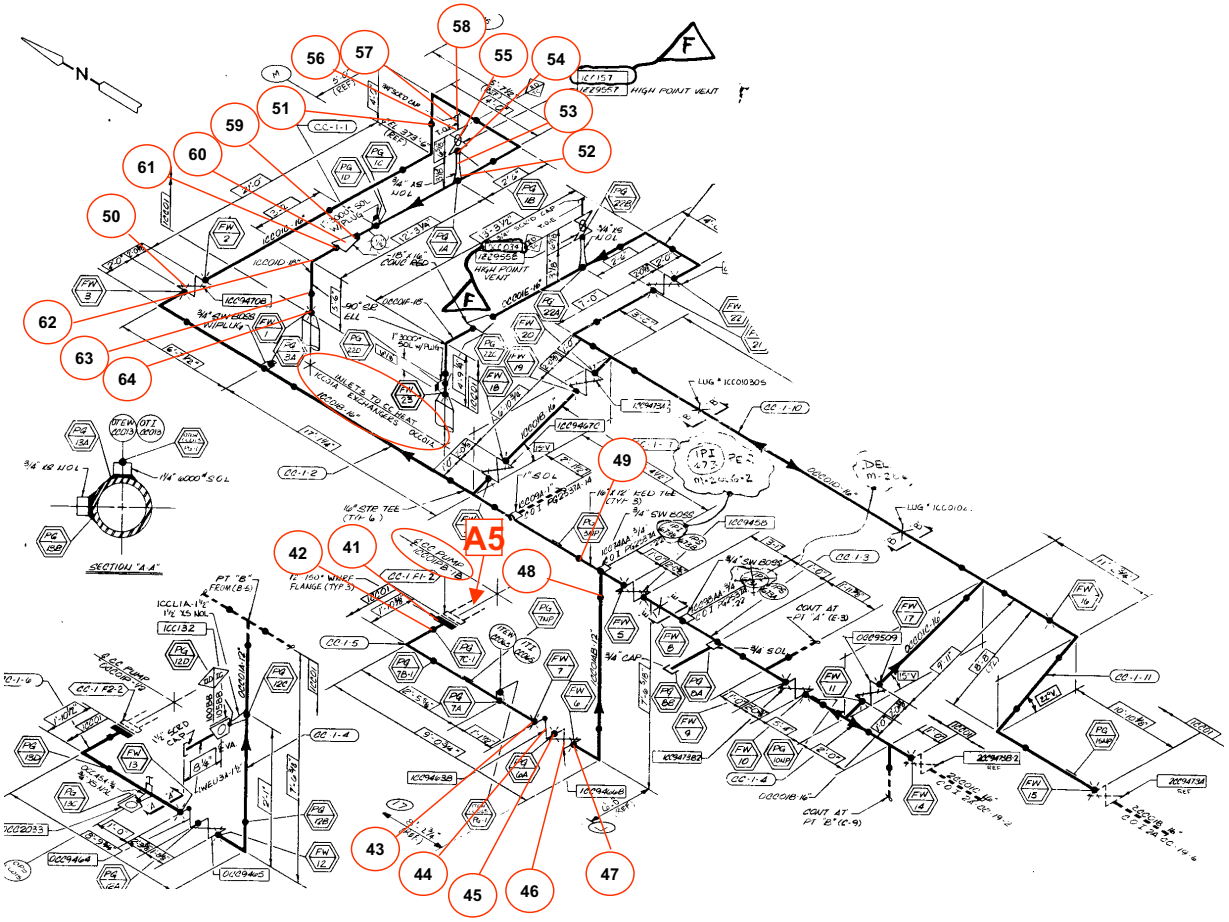

GROUP 41 – COMPONENT COOLING WATER PIPING
Surge Tank to CCW HX (Sheet 6 of 8)
(Covers Worksheets SS-CCWHX – 1 thru 72)

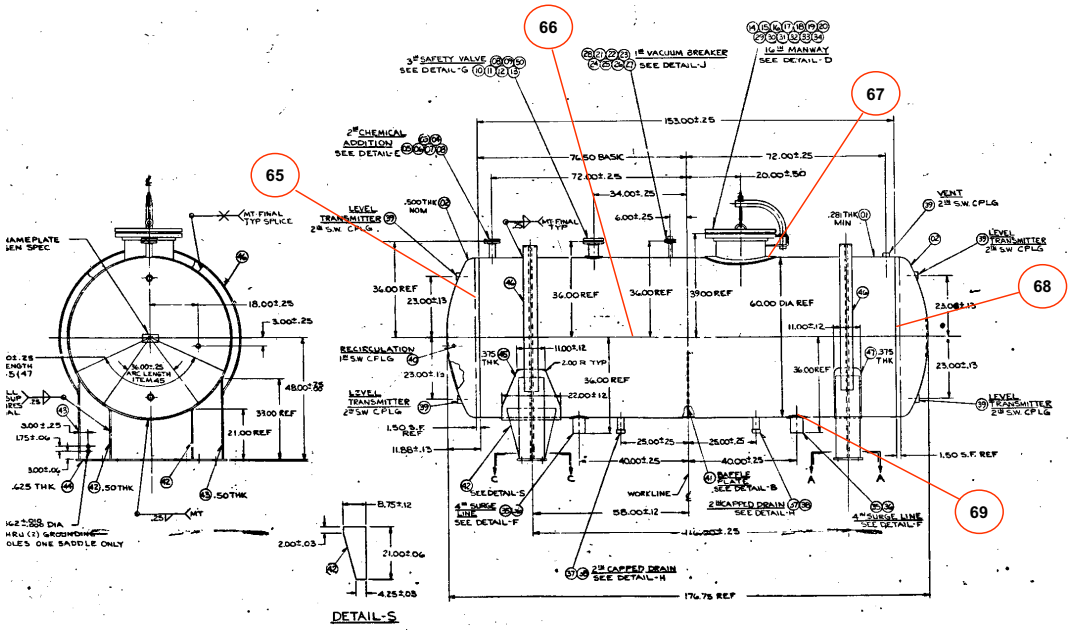

SURGE TANK
(ICCOIT)

GROUP 41 – COMPONENT COOLING WATER PIPING
Surge Tank to CCW HX (Sheet 7 of 8)
(Covers Worksheets SS-CCWHX – 1 thru 72)

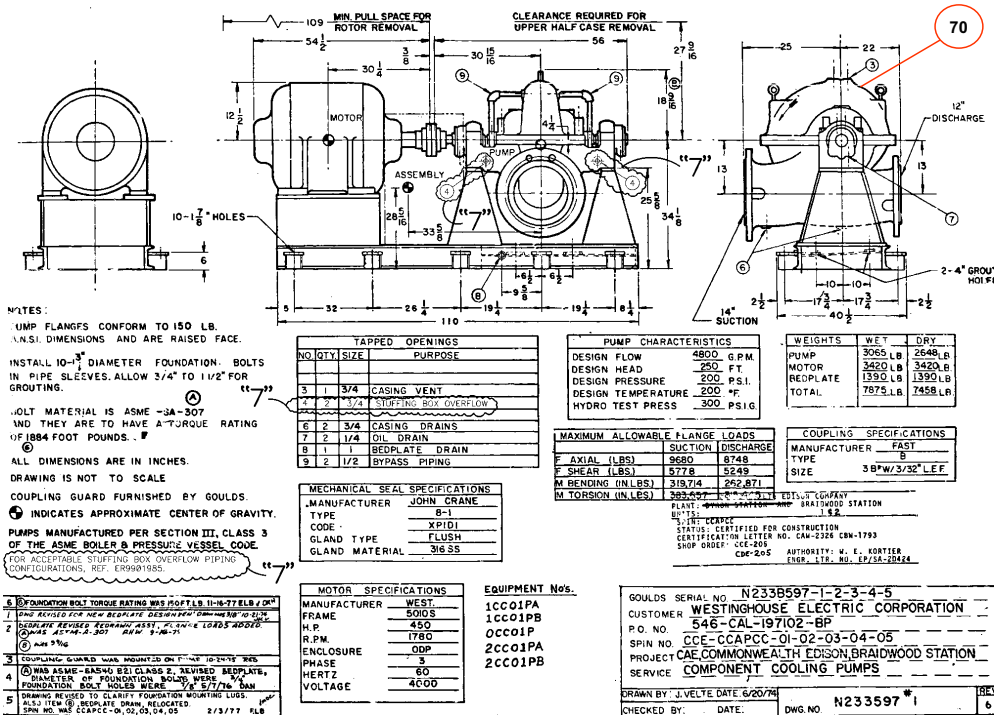

CCW PUMP
(1CC01PB)

GROUP 41 – COMPONENT COOLING WATER PIPING
Surge Tank to CCW HX (Sheet 8 of 8)
(Covers Worksheets SS-CCWHX – 1 thru 72)

71 Shell Side Nozzles

72 Tube Side Nozzles

FOR CCW HX COMPONENTS EXCEPT NOZZLES - SEE GROUP 29

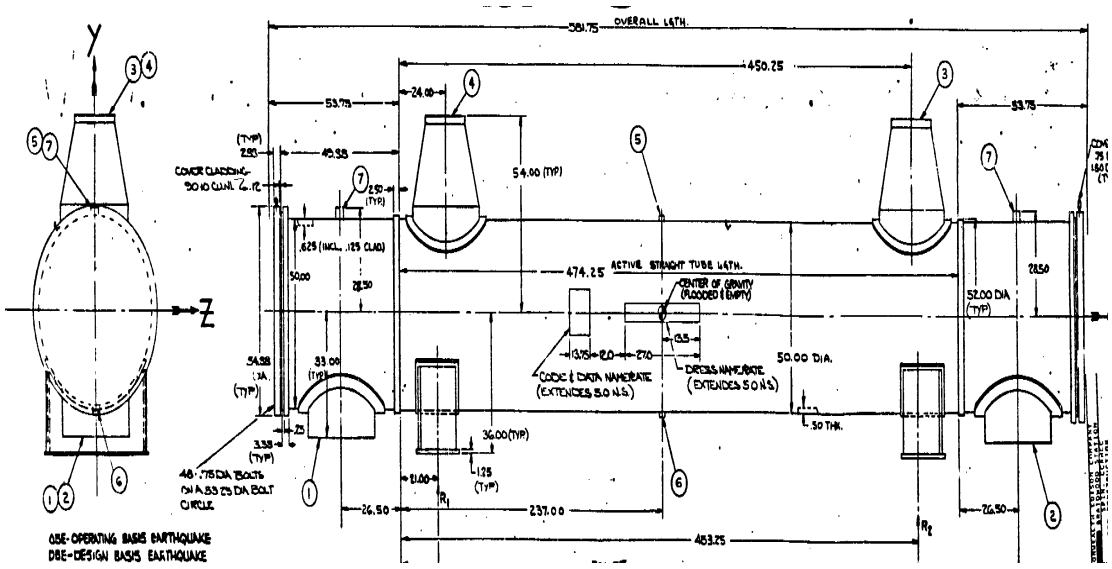

CCW HX (ICCOIA)

GROUP 42 – COMPONENT COOLING WATER PIPING
CCW HX to RHR HX (Sheet 1 of 4)
(Covers Worksheets SS-CCWRHR – 1 thru 50)

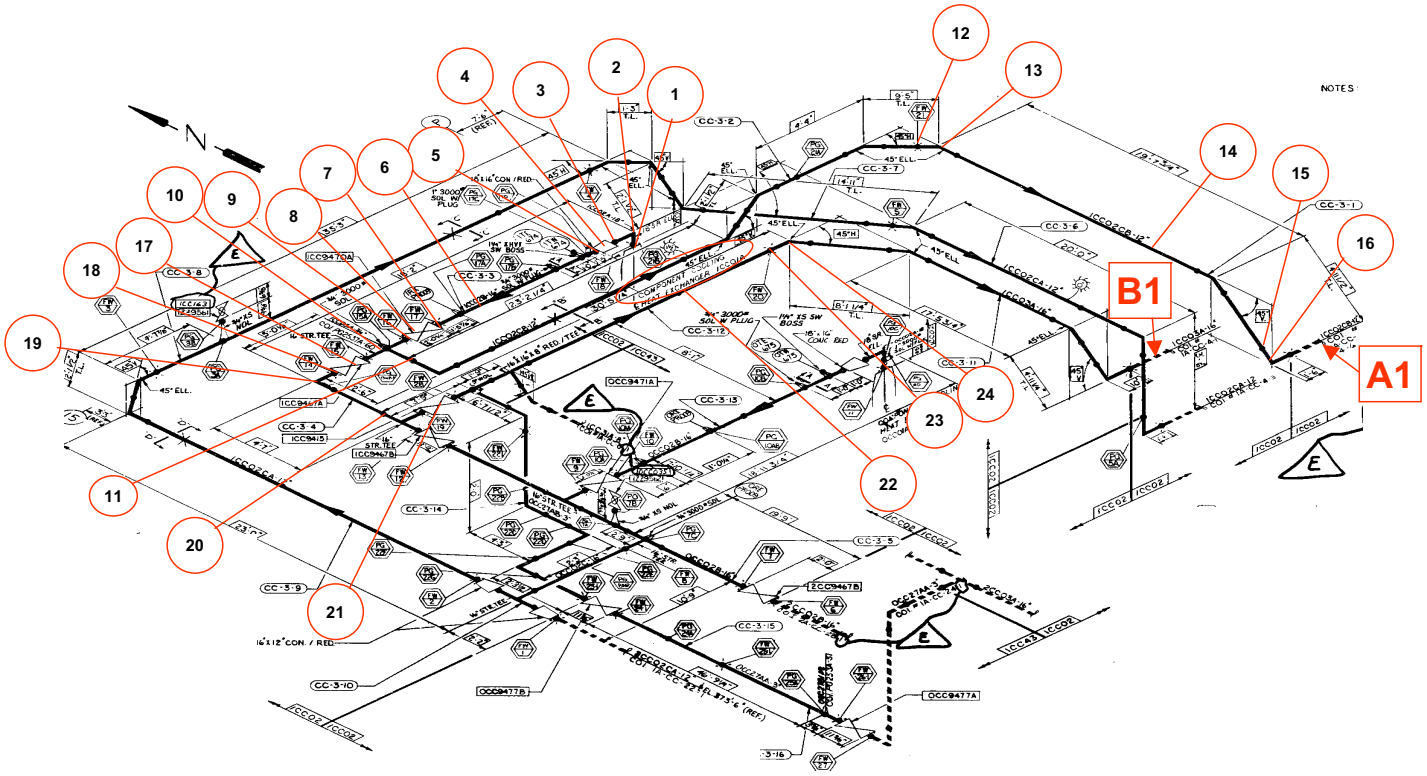

GROUP 42 – COMPONENT COOLING WATER PIPING
CCW HX to RHR HX (Sheet 2 of 4)
(Covers Worksheets SS-CCWRHR – 1 thru 50)

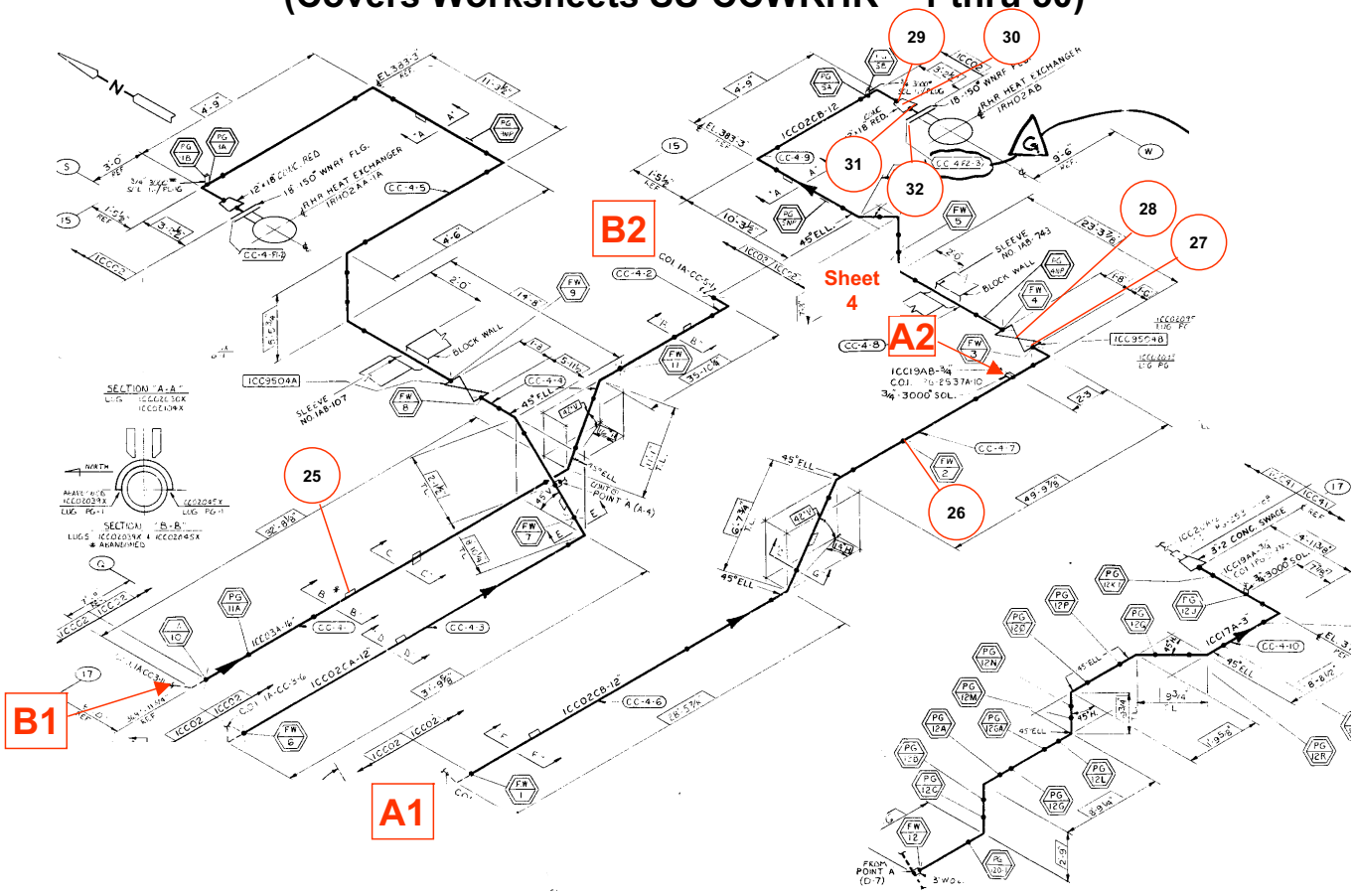

GROUP 42 – COMPONENT COOLING WATER PIPING
CCW HX to RHR HX (Sheet 3 of 4)
(Covers Worksheets SS-CCWRHR – 1 thru 50)

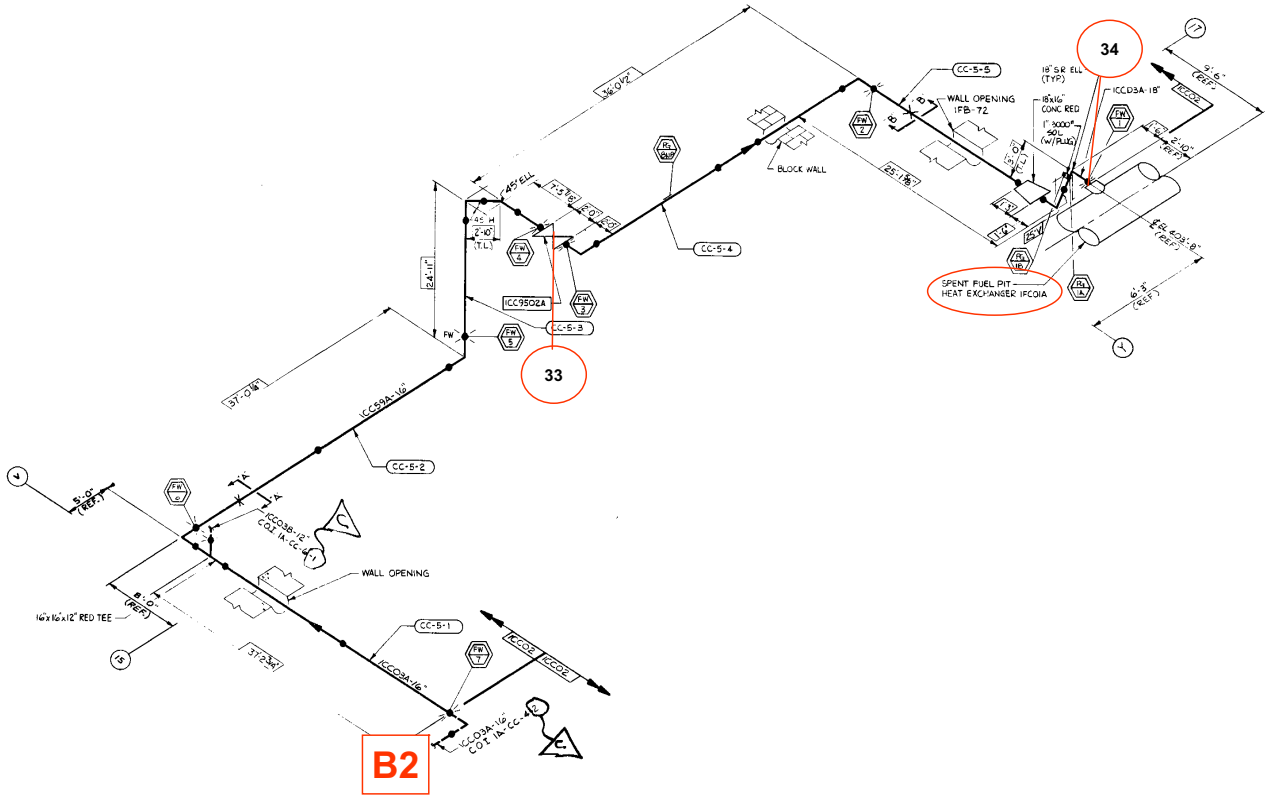

GROUP 42 – COMPONENT COOLING WATER PIPING
CCW HX to RHR HX (Sheet 4 of 4)
(Covers Worksheets SS-CCWRHR – 1 thru 50)

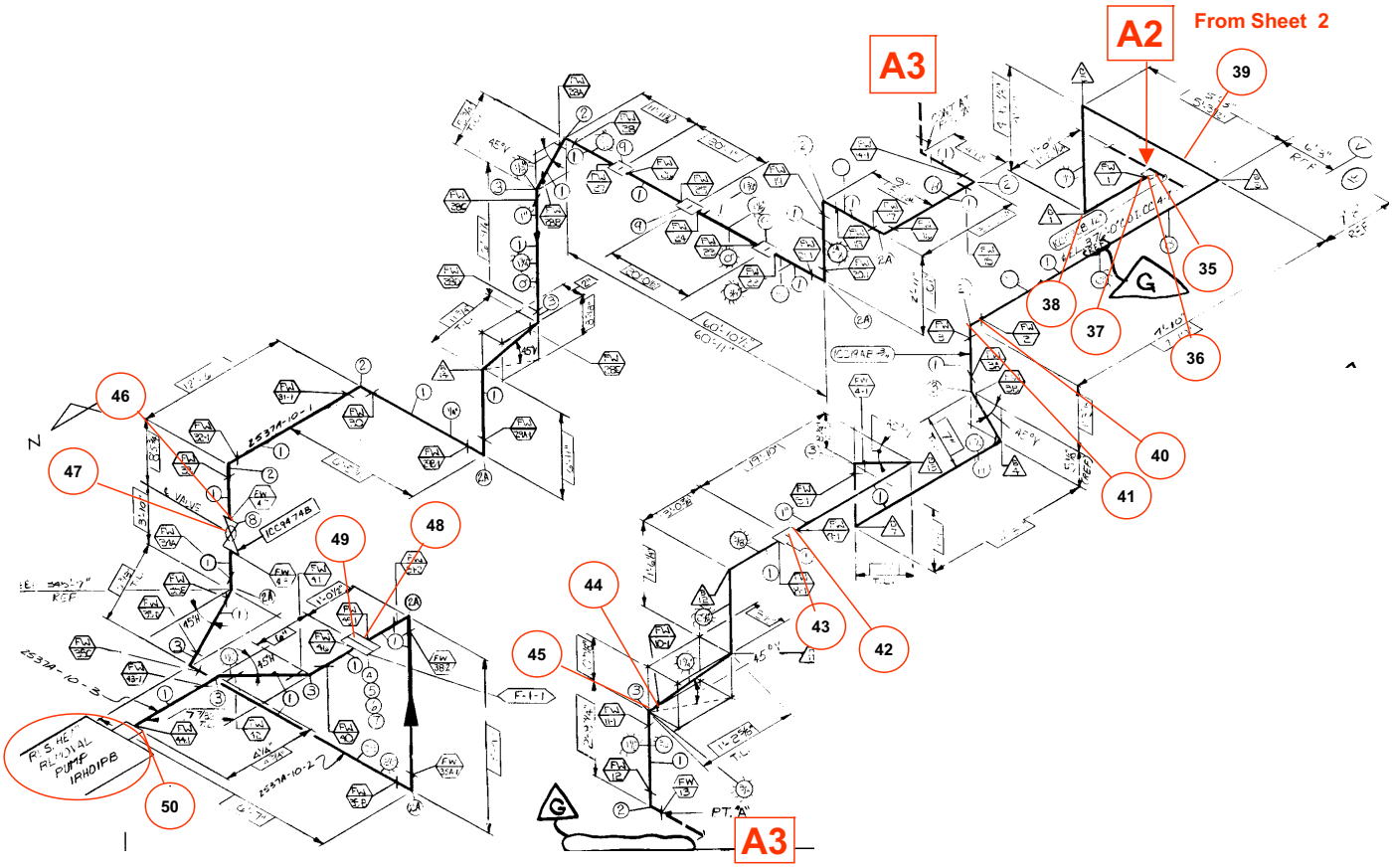

GROUP 43 – COMPONENT COOLING WATER PIPING
Cooling Water to Other Loads Outside Containment (Sheet 1 of 5)
(Covers Worksheets SS-CCWLDS – 1 thru 56)

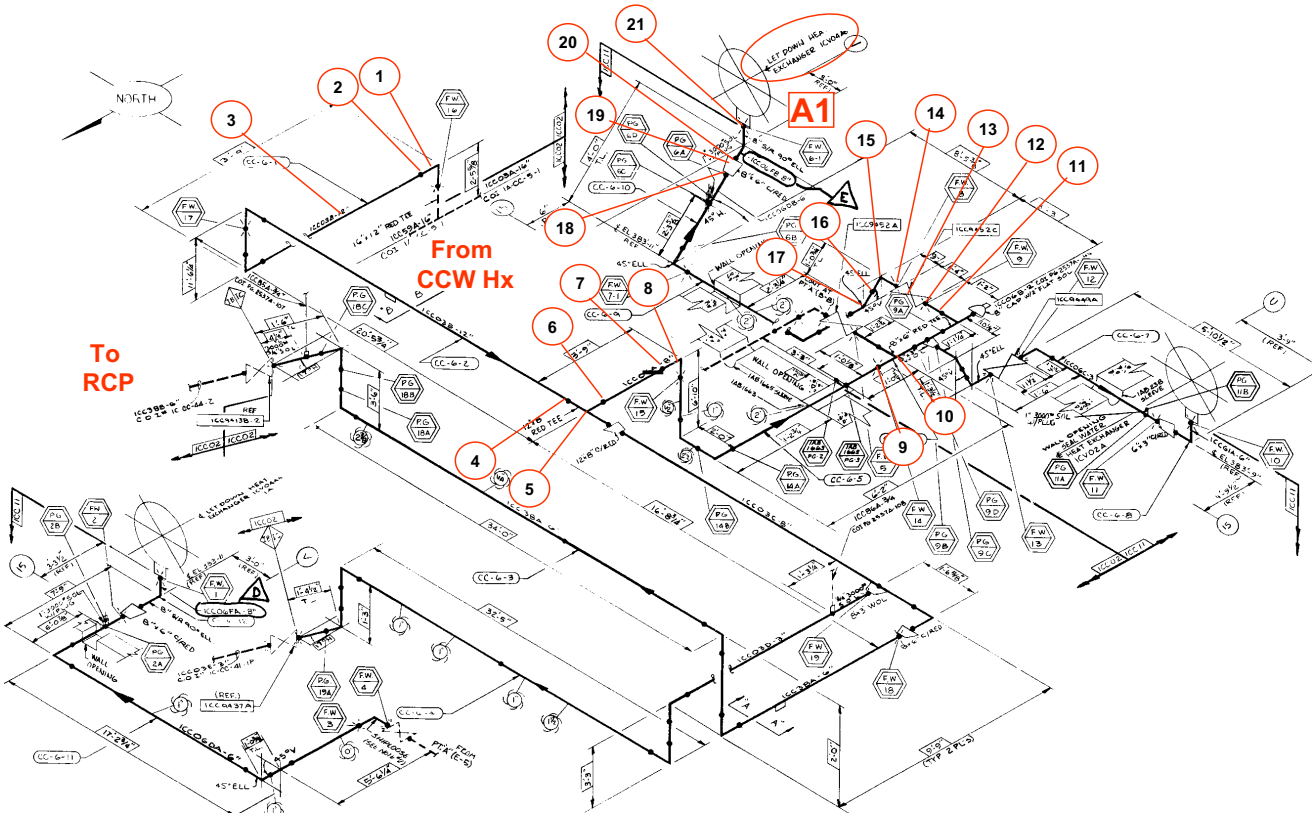

GROUP 43 – COMPONENT COOLING WATER PIPING
Cooling Water to Other Loads Outside Containment (Sheet 2 of 5)
(Covers Worksheets SS-CCWLDS – 1 thru 56)

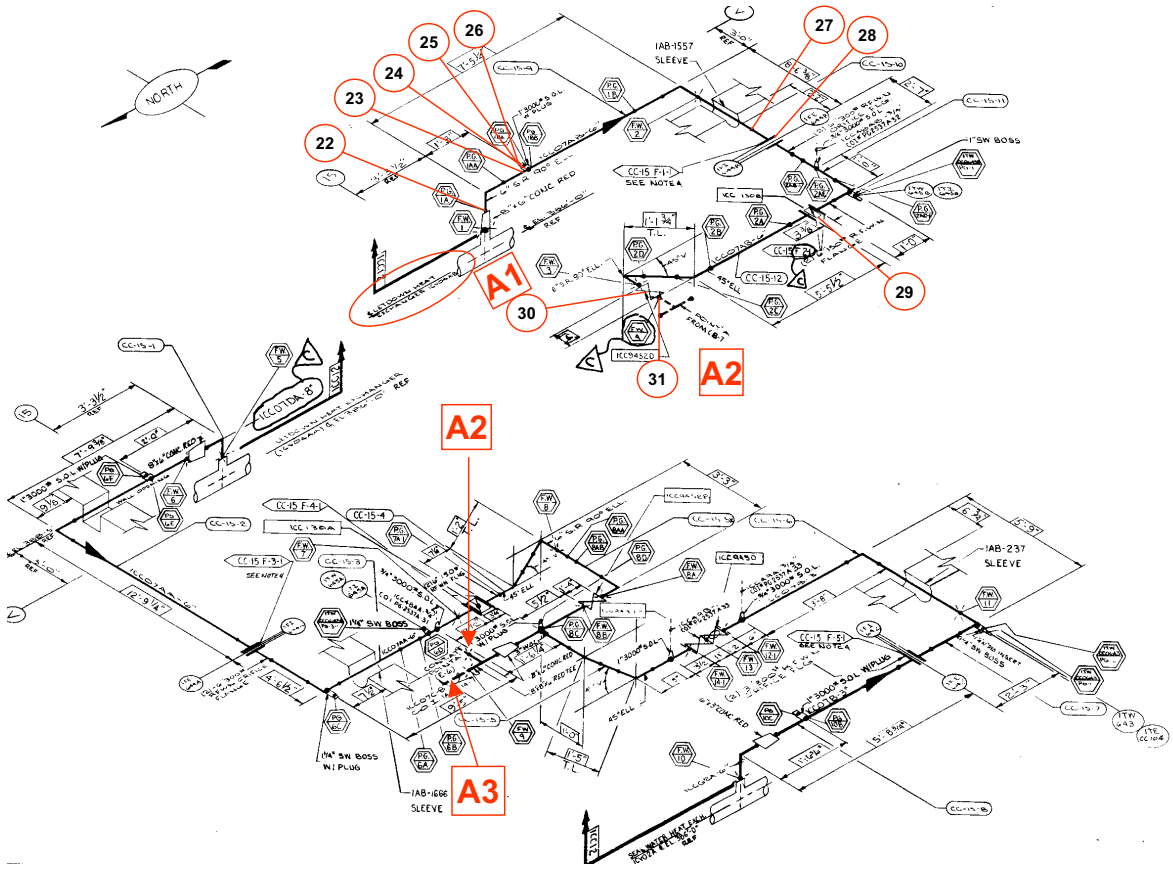

GROUP 43 – COMPONENT COOLING WATER PIPING
Cooling Water to Other Loads Outside Containment (Sheet 3 of 5)
(Covers Worksheets SS-CCWLDS – 1 thru 56)

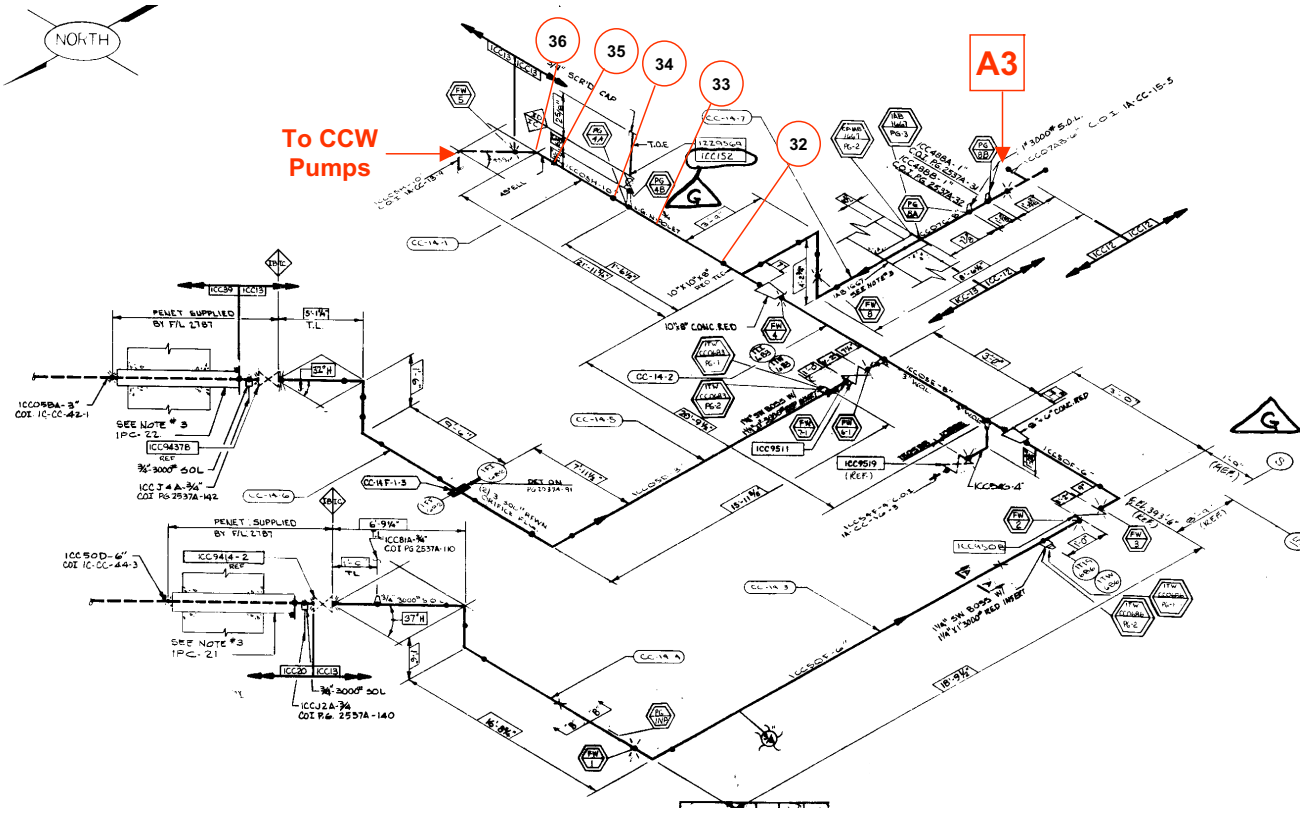

GROUP 43 – COMPONENT COOLING WATER PIPING
Cooling Water to Other Loads Outside Containment (Sheet 4 of 5)
(Covers Worksheets SS-CCWLDS – 1 thru 56)

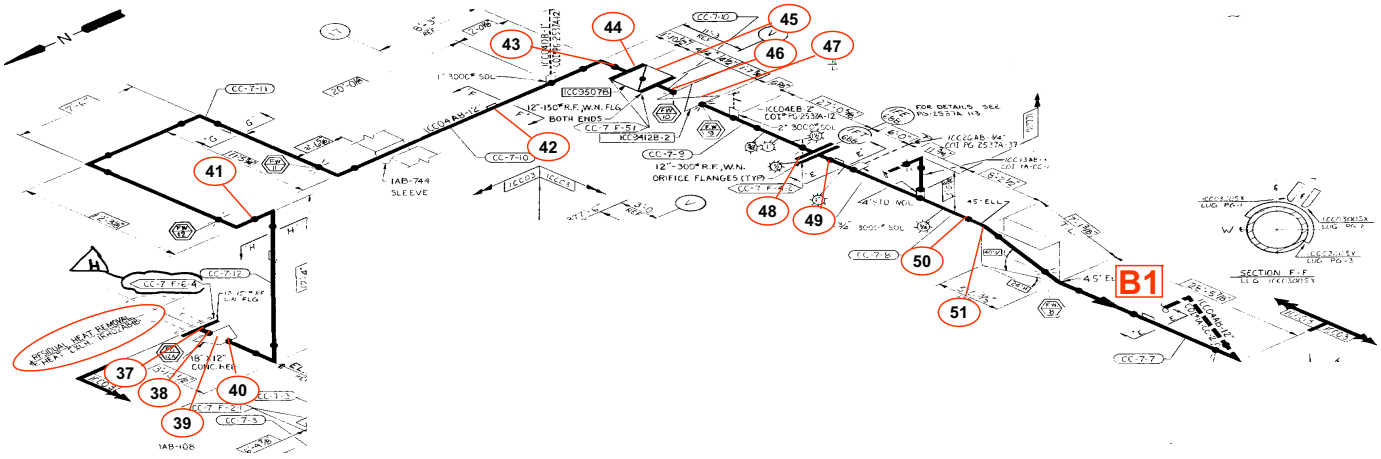

GROUP 43 – COMPONENT COOLING WATER PIPING
Cooling Water to Other Loads Outside Containment (Sheet 5 of 5)
(Covers Worksheets SS-CCWLDS – 1 thru 56)

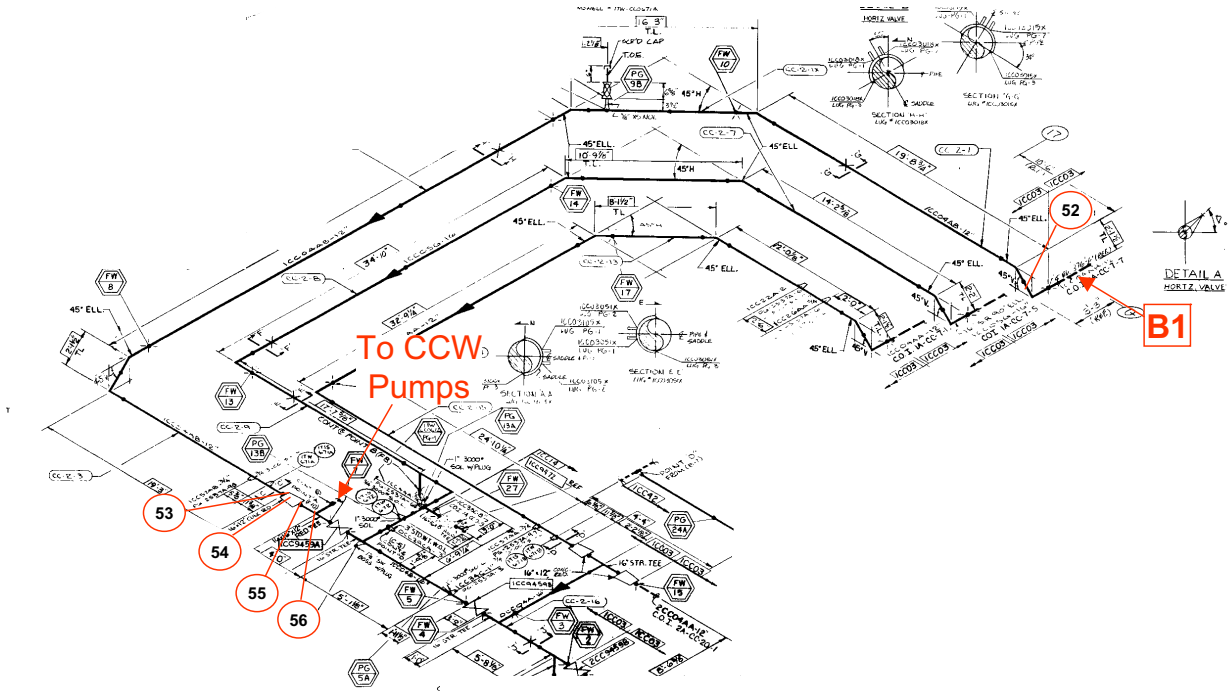

GROUP 44 – COMPONENT COOLING WATER PIPING
Cooling Water to RCP Inside Containment (Sheet 1 of 4)
(Covers Worksheets SS-CCWRCP – 1 thru 58)

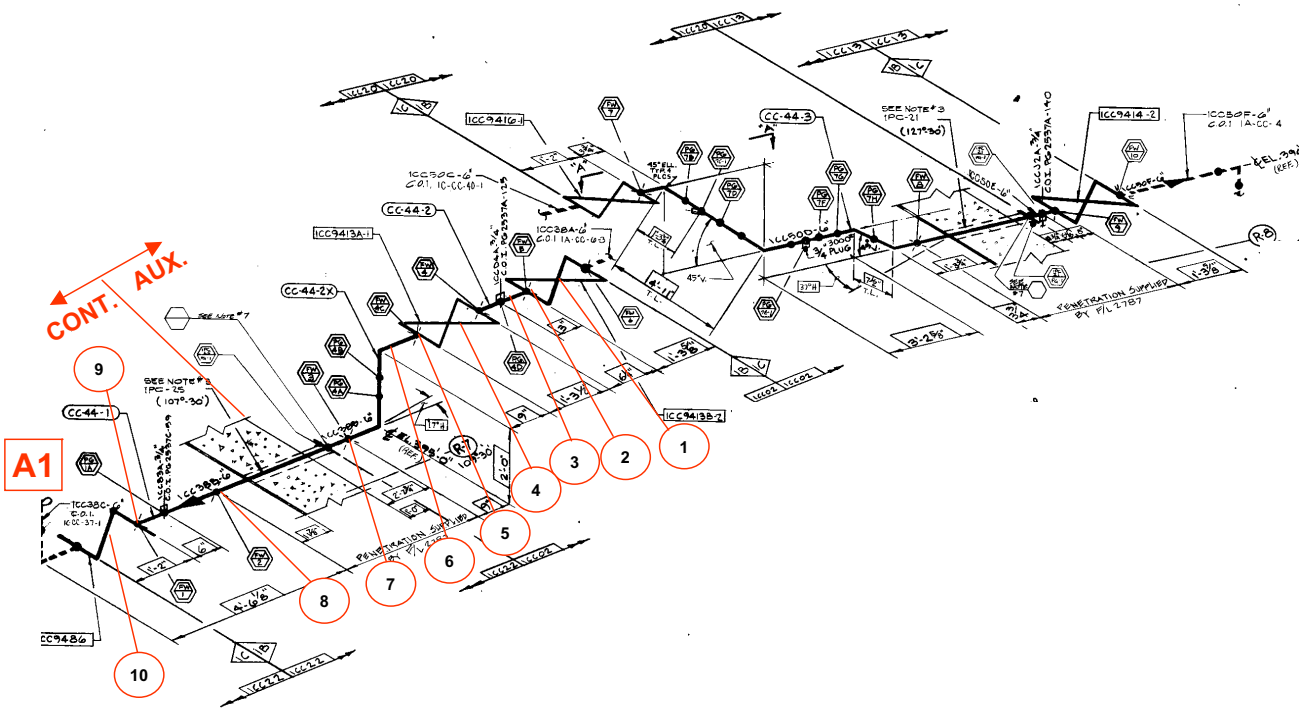

GROUP 44 – COMPONENT COOLING WATER PIPING
Cooling Water to RCP Inside Containment (Sheet 2 of 4)
(Covers Worksheets SS-CCWRCP – 1 thru 58)

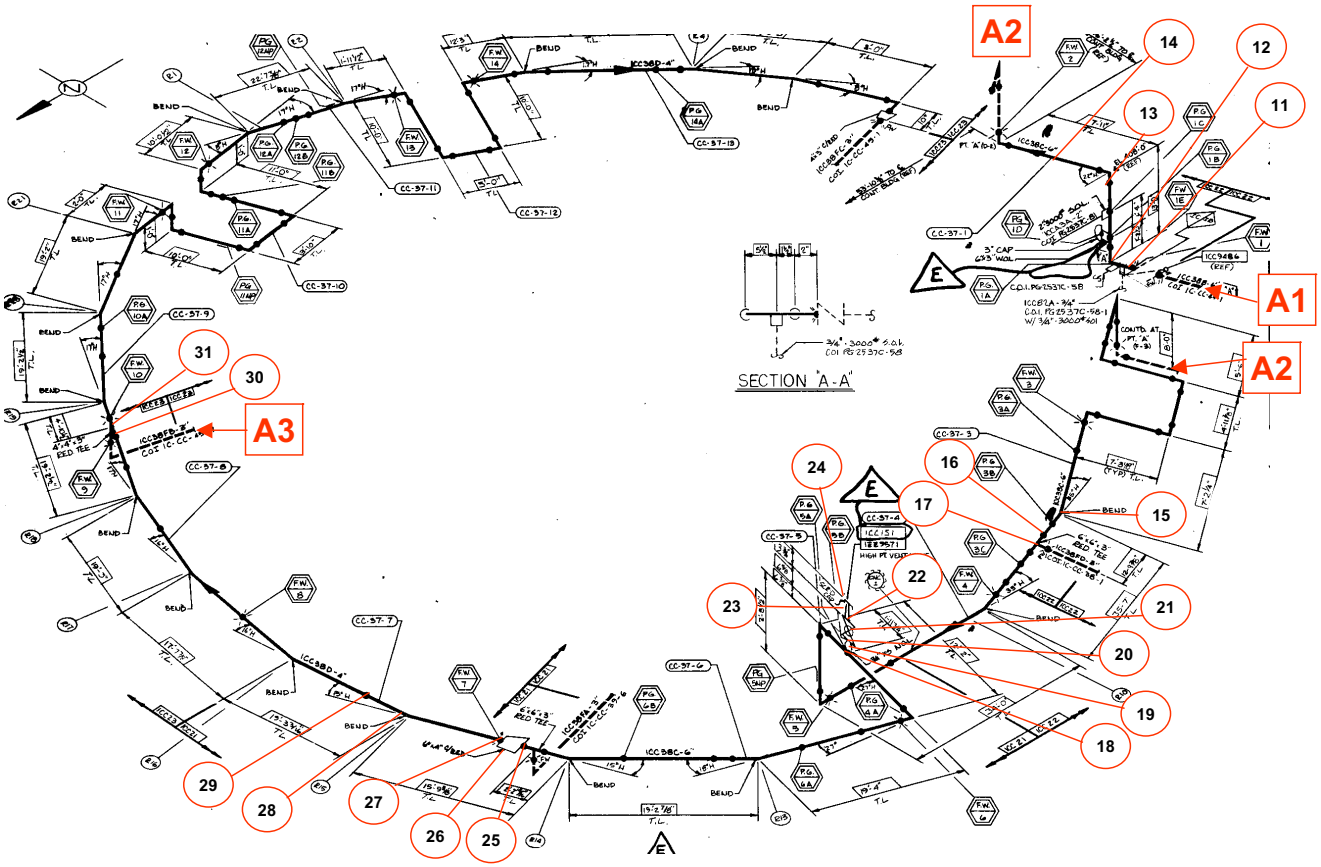

GROUP 44 – COMPONENT COOLING WATER PIPING
Cooling Water to RCP Inside Containment (Sheet 3 of 4)
(Covers Worksheets SS-CCWRCP – 1 thru 58)

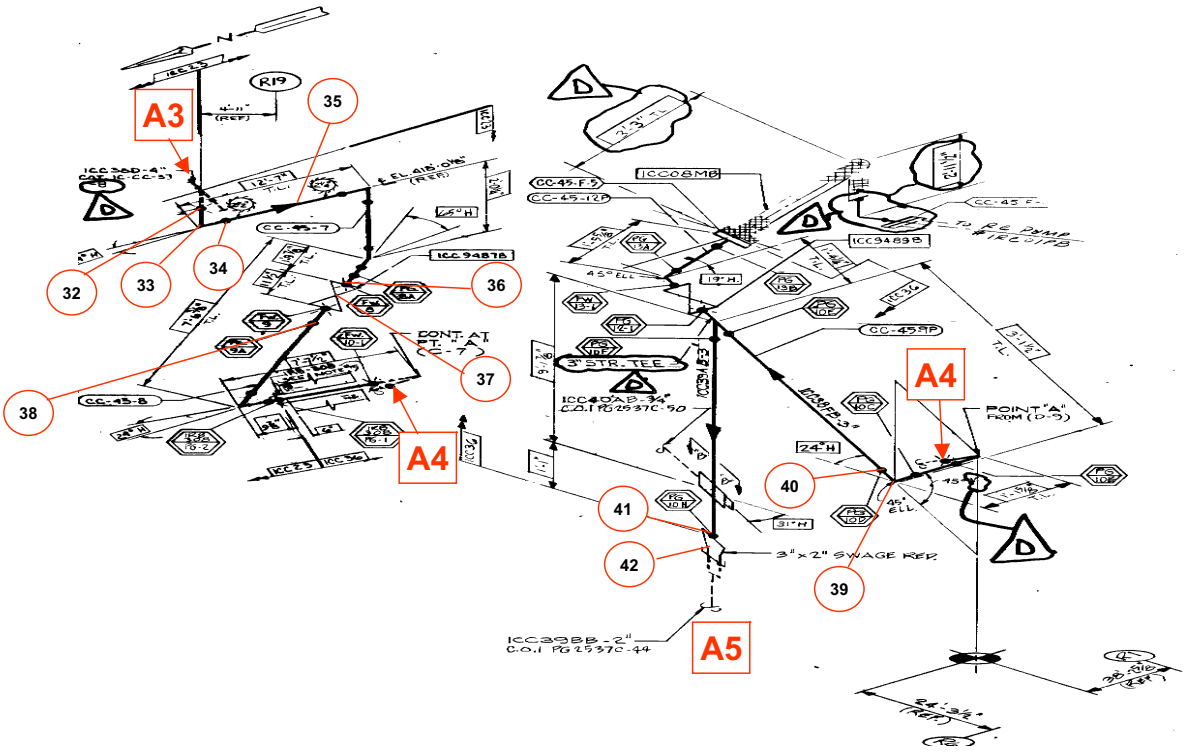

GROUP 44 – COMPONENT COOLING WATER PIPING
Cooling Water to RCP Inside Containment (Sheet 4 of 4)
(Covers Worksheets SS-CCWRCP – 1 thru 58)

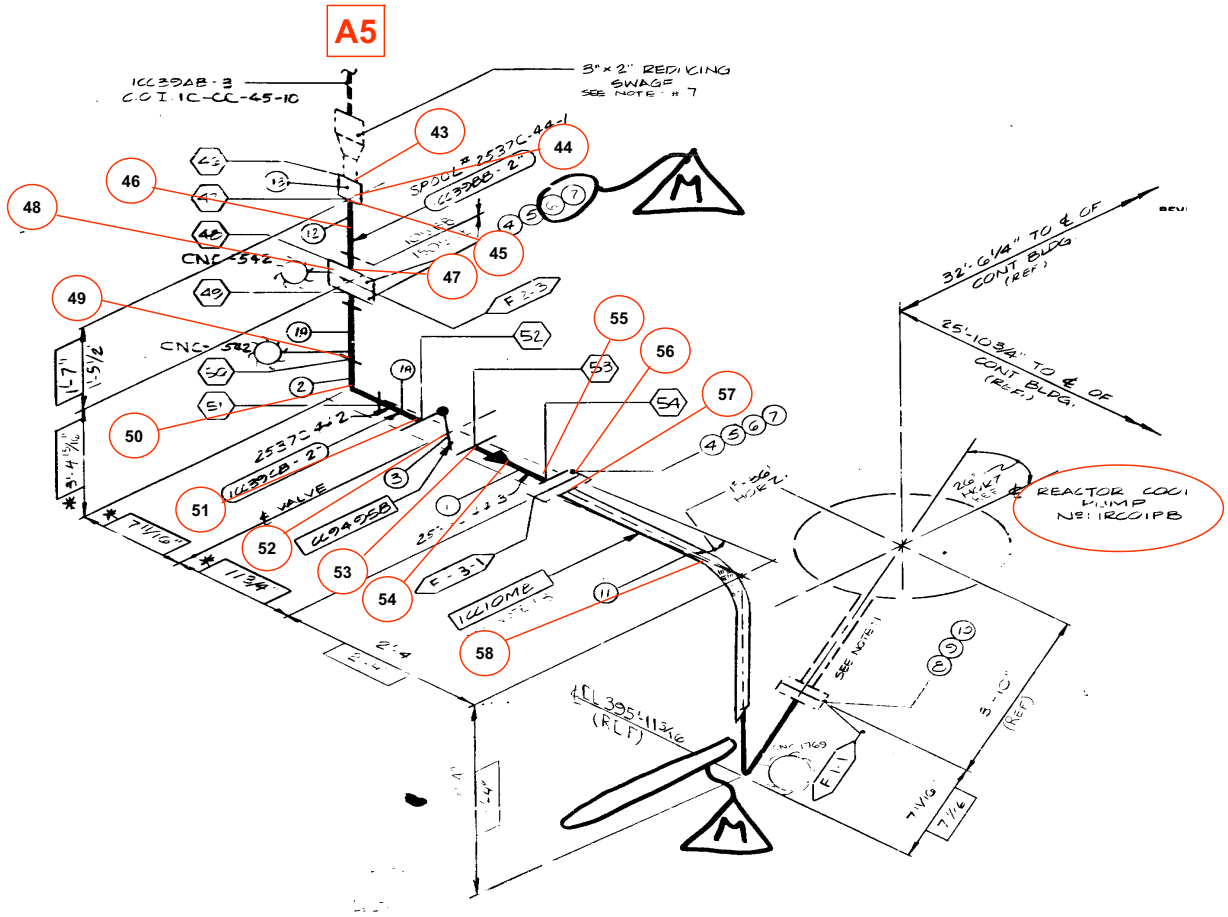

GROUP 45 – SPENT FUEL POOL COOLING PIPING
SFP Cooling System (Sheet 1 of 6)
(Covers Worksheets SS-SFPCLG – 1 thru 66)

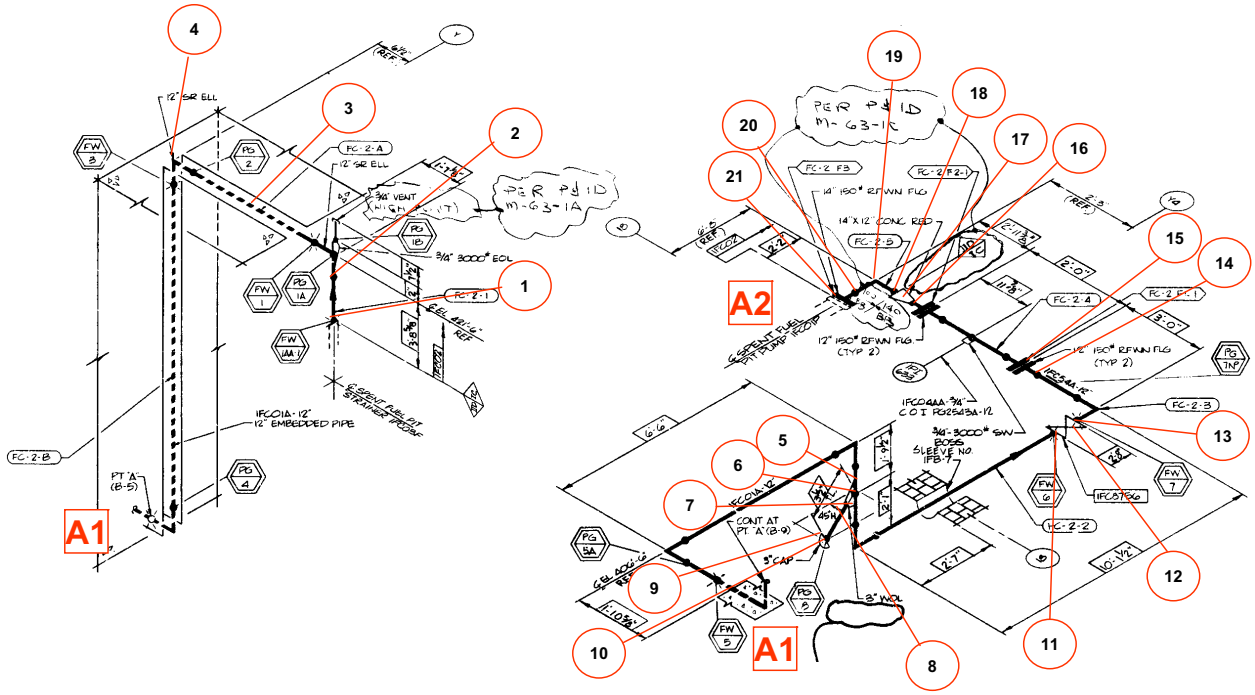

GROUP 45 – SPENT FUEL POOL COOLING PIPING
SFP Cooling System (Sheet 2 of 6)
(Covers Worksheets SS-SFPCLG – 1 thru 66)

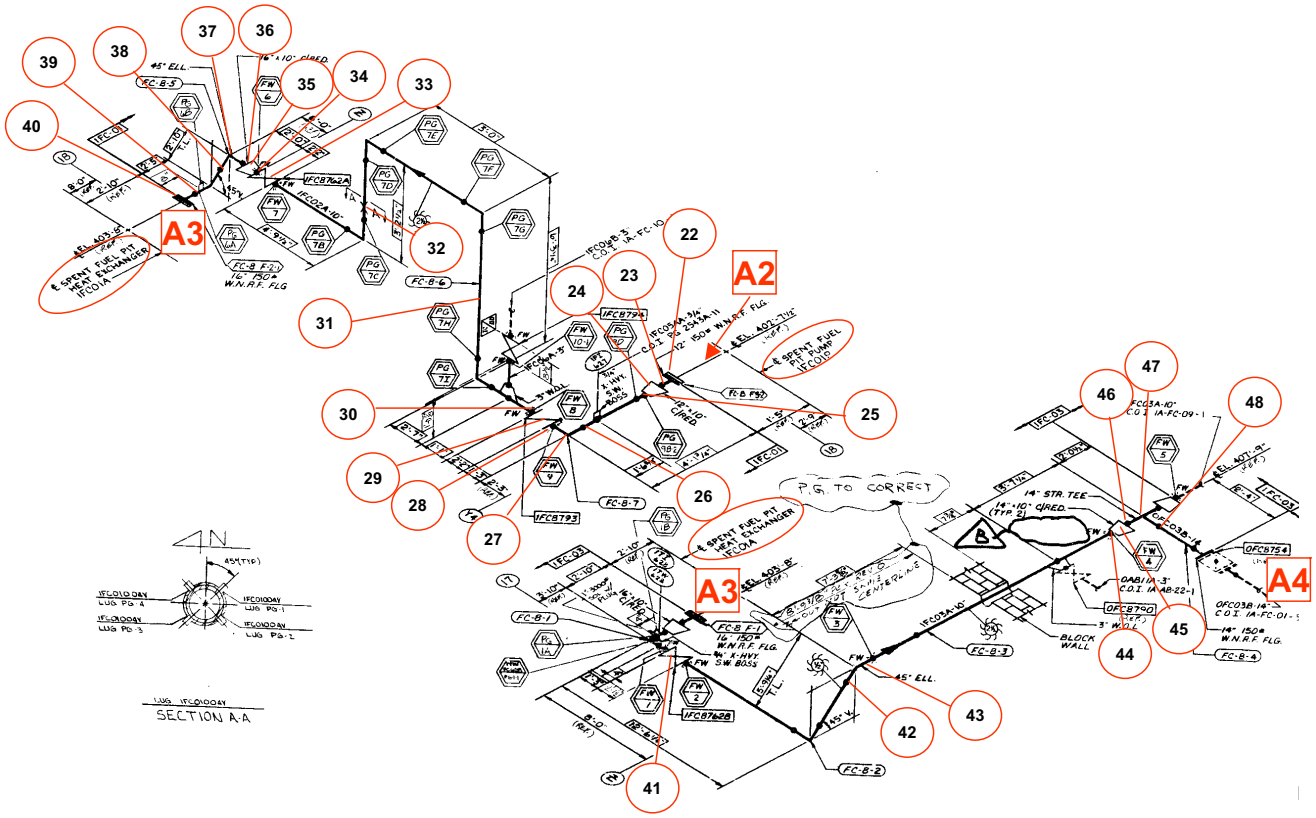

GROUP 45 – SPENT FUEL POOL COOLING PIPING
SFP Cooling System (Sheet 3 of 6)
(Covers Worksheets SS-SFPCLG – 1 thru 66)

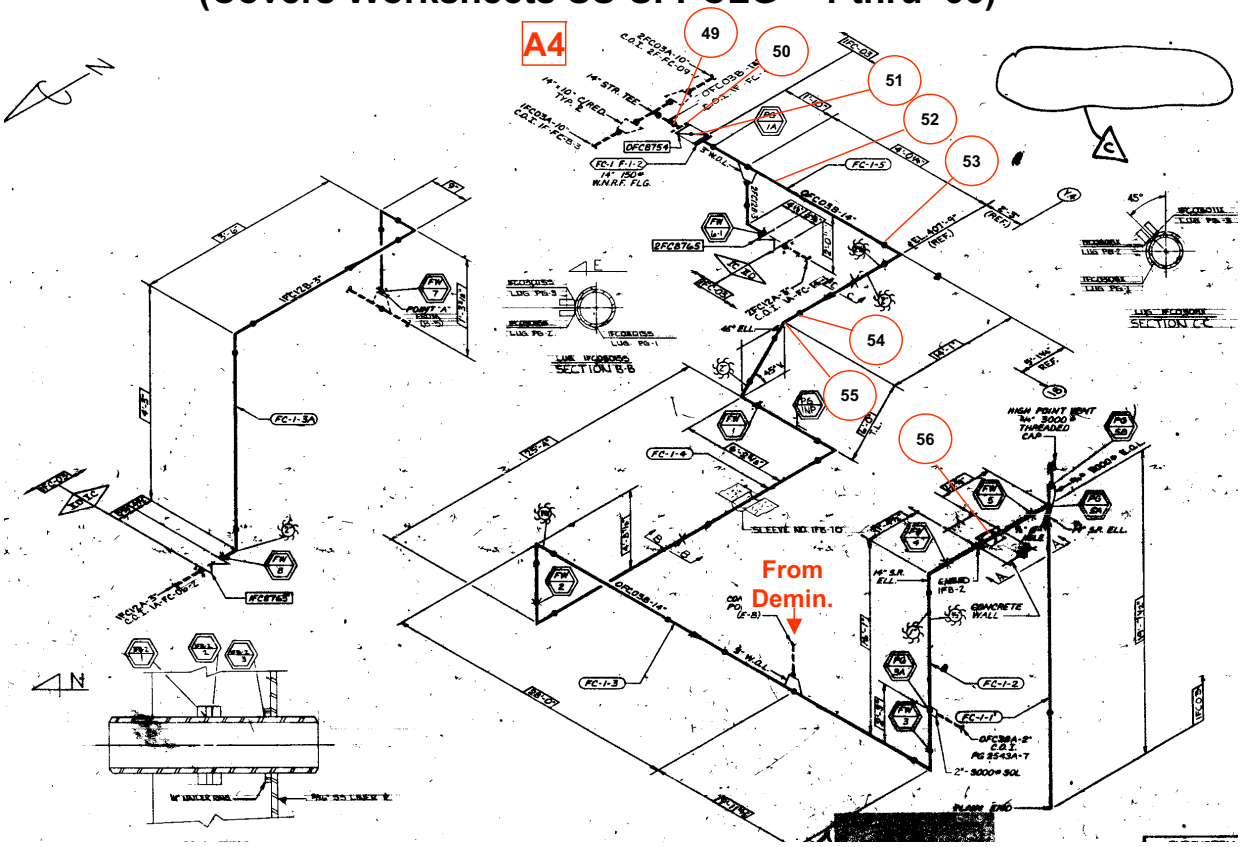

GROUP 45 – SPENT FUEL POOL COOLING PIPING
SFP Cooling System (Sheet 4 of 6)
(Covers Worksheets SS-SFPCLG – 1 thru 66)

57 Tube side nozzles

58 Tube sheet

59 Tubes

60 Shell

61 Shell side nozzles

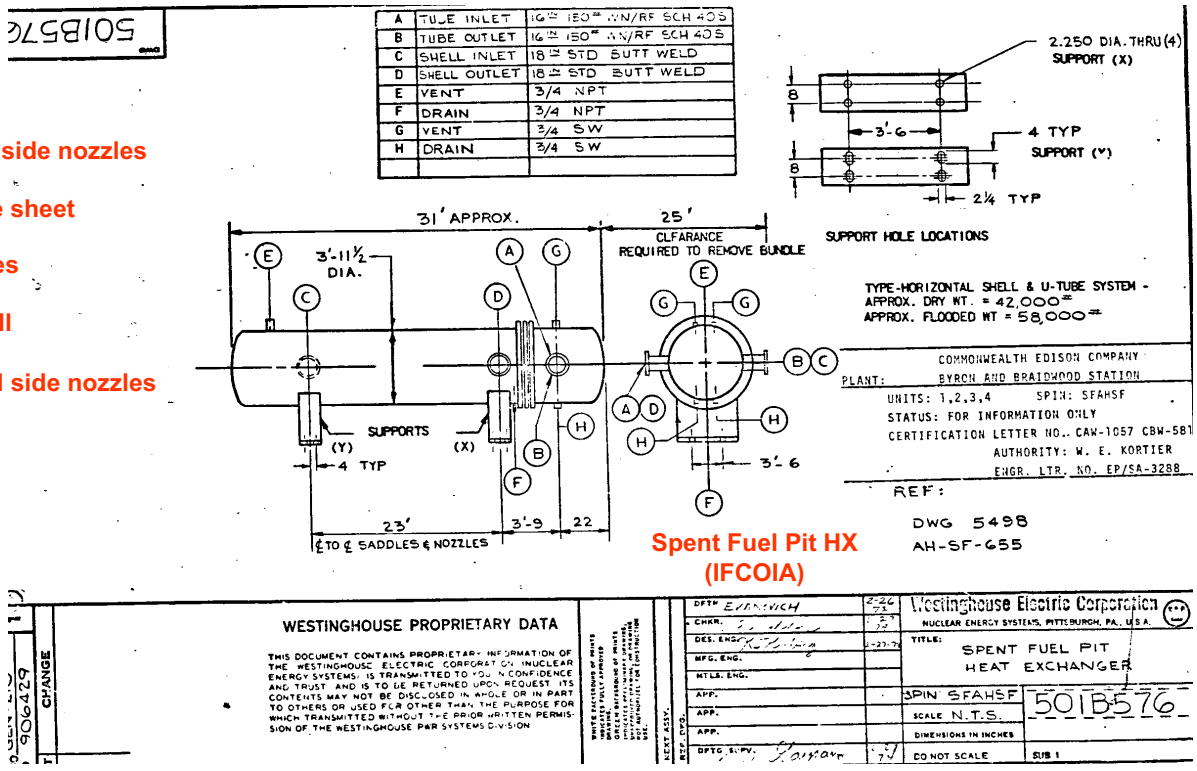

Spent Fuel Pit HX
(IFCOIA)

GROUP 45 – SPENT FUEL POOL COOLING PIPING
SFP Cooling System (Sheet 5 of 6)
(Covers Worksheets SS-SFPCLG – 1 thru 66)

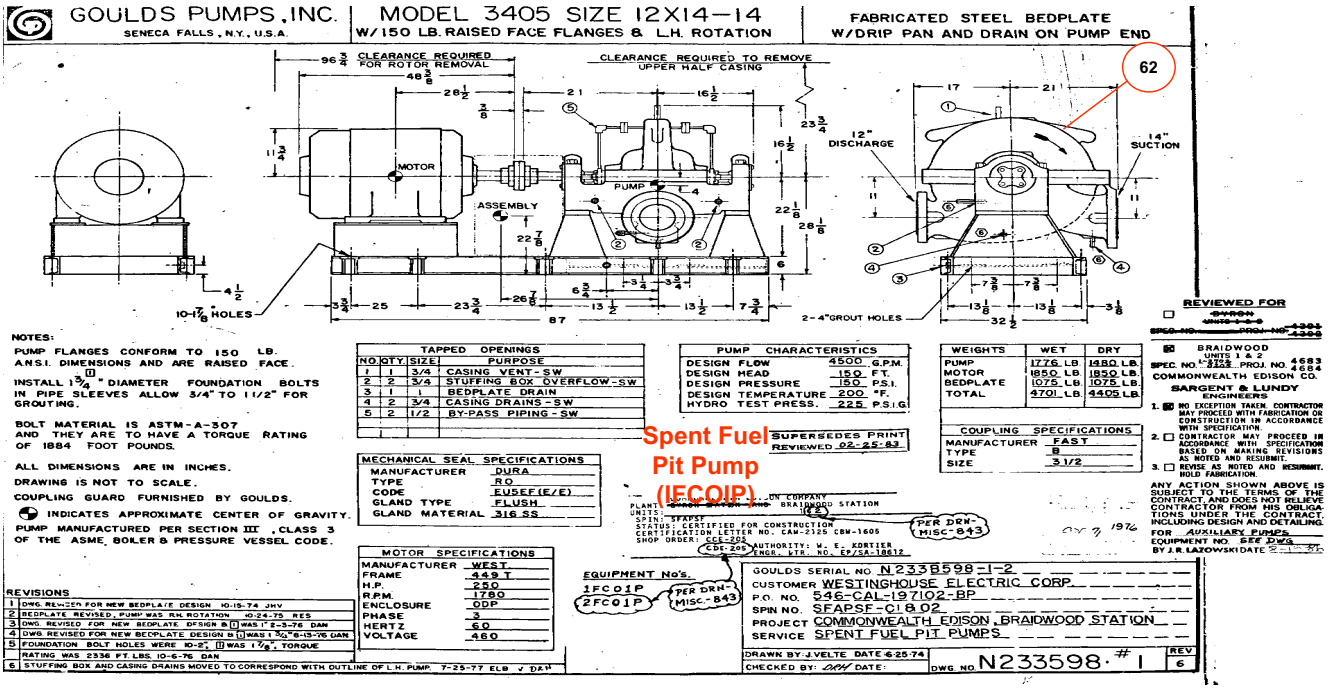

GROUP 45 – SPENT FUEL POOL COOLING PIPING
SFP Cooling System (Sheet 6 of 6)
(Covers Worksheets SS-SFPCLG – 1 thru 66)

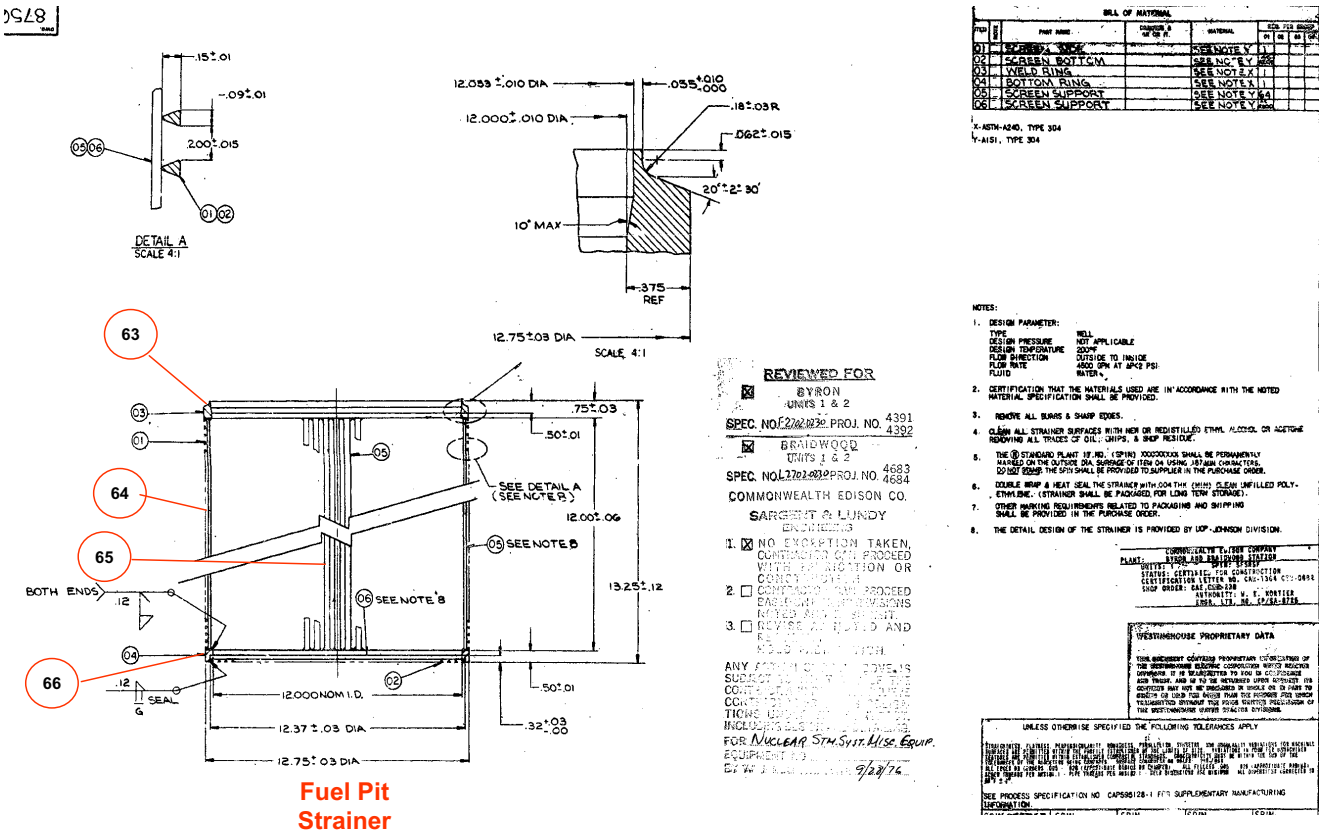

Fuel Pit Strainer (IFC03F)

GROUP 46 – SPENT FUEL POOL CLEANING PIPING
SFP Cleanup System (Sheet 1 of 10)
(Covers Worksheets SS-SFPCLN – 1 thru 46)

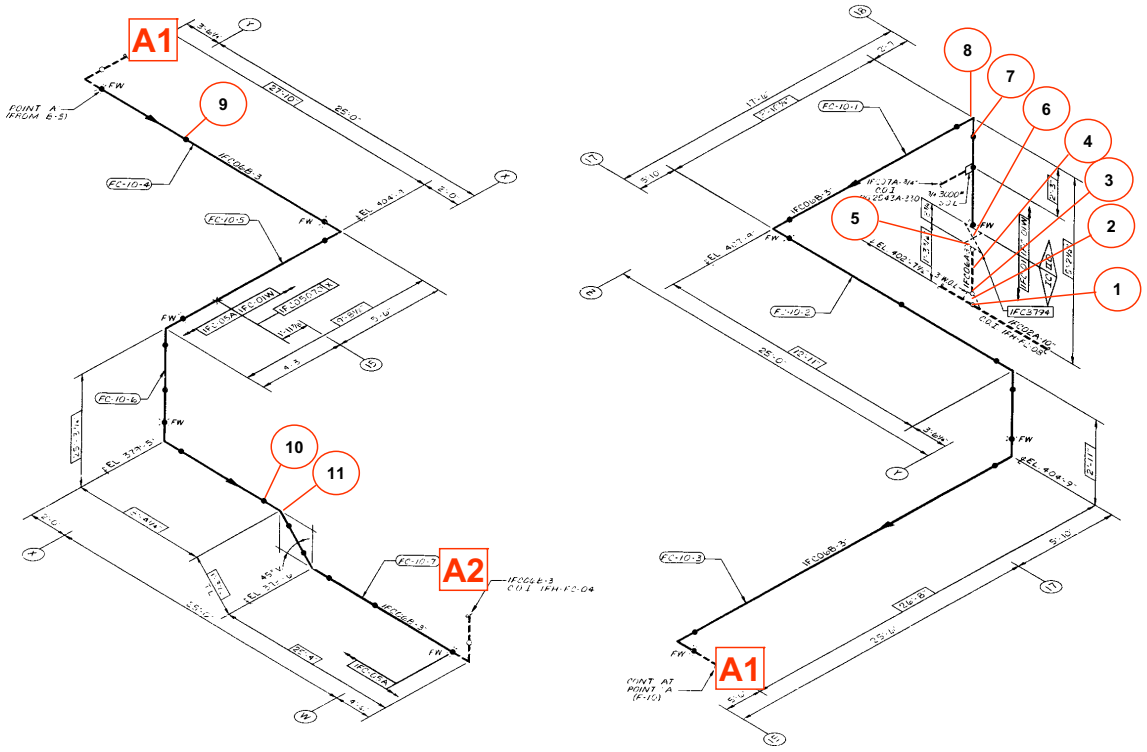

GROUP 46 – SPENT FUEL POOL CLEANING PIPING
SFP Cleanup System (Sheet 2 of 10)
(Covers Worksheets SS-SFPCLN – 1 thru 46)

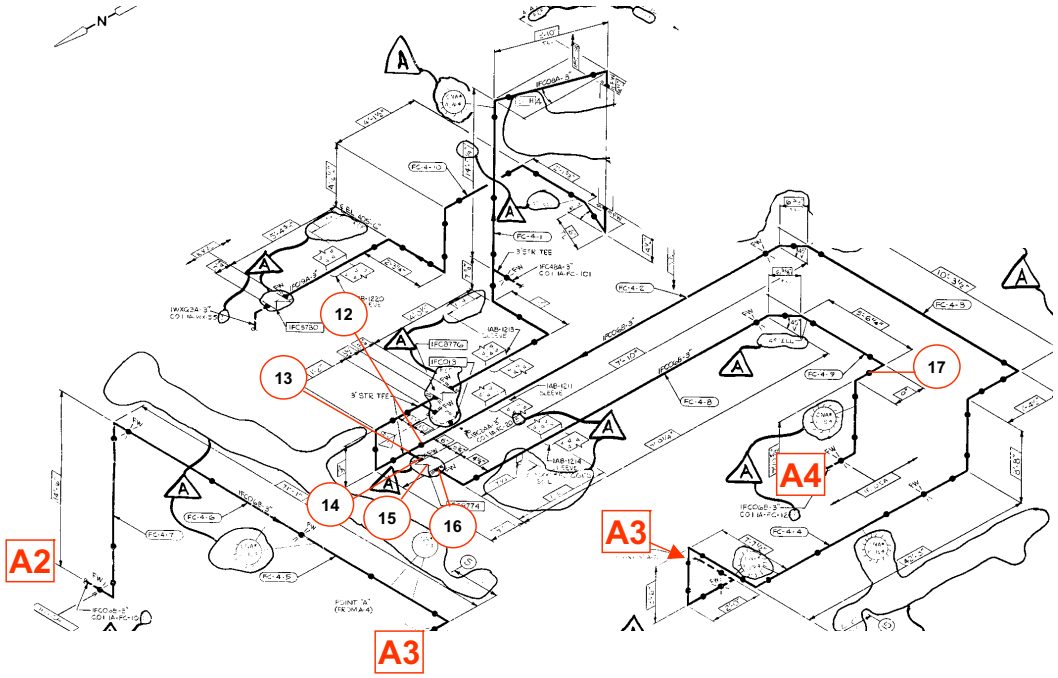

GROUP 46 – SPENT FUEL POOL CLEANING PIPING
SFP Cleanup System (Sheet 3 of 10)
(Covers Worksheets SS-SFPCLN – 1 thru 46)

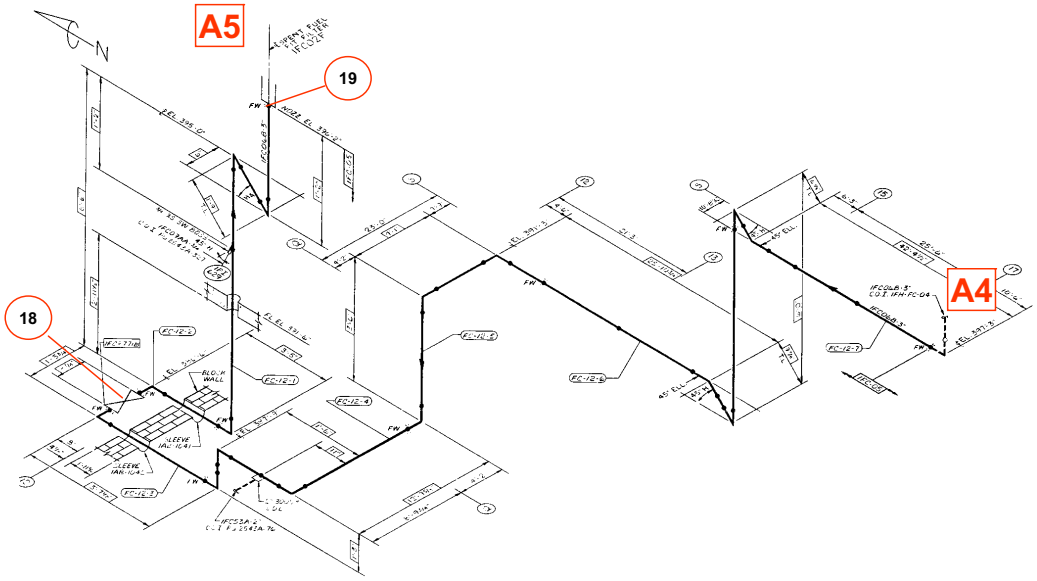

GROUP 46 – SPENT FUEL POOL CLEANING PIPING
SFP Cleanup System (Sheet 4 of 10)
(Covers Worksheets SS-SFPCLN – 1 thru 46)

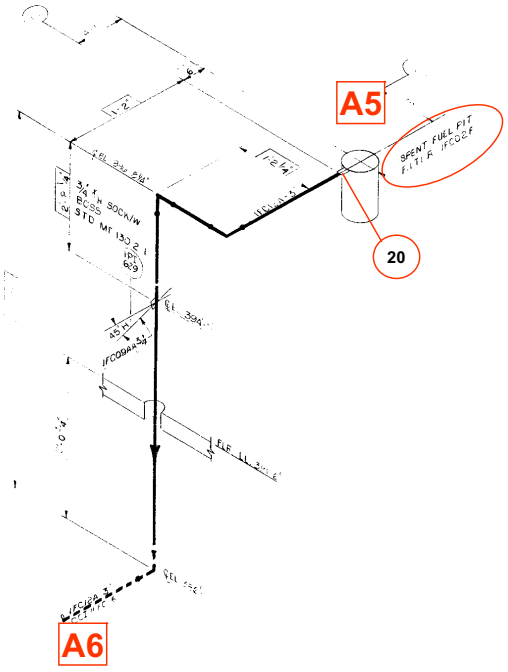

GROUP 46 – SPENT FUEL POOL CLEANING PIPING
SFP Cleanup System (Sheet 5 of 10)
(Covers Worksheets SS-SFPCLN – 1 thru 46)

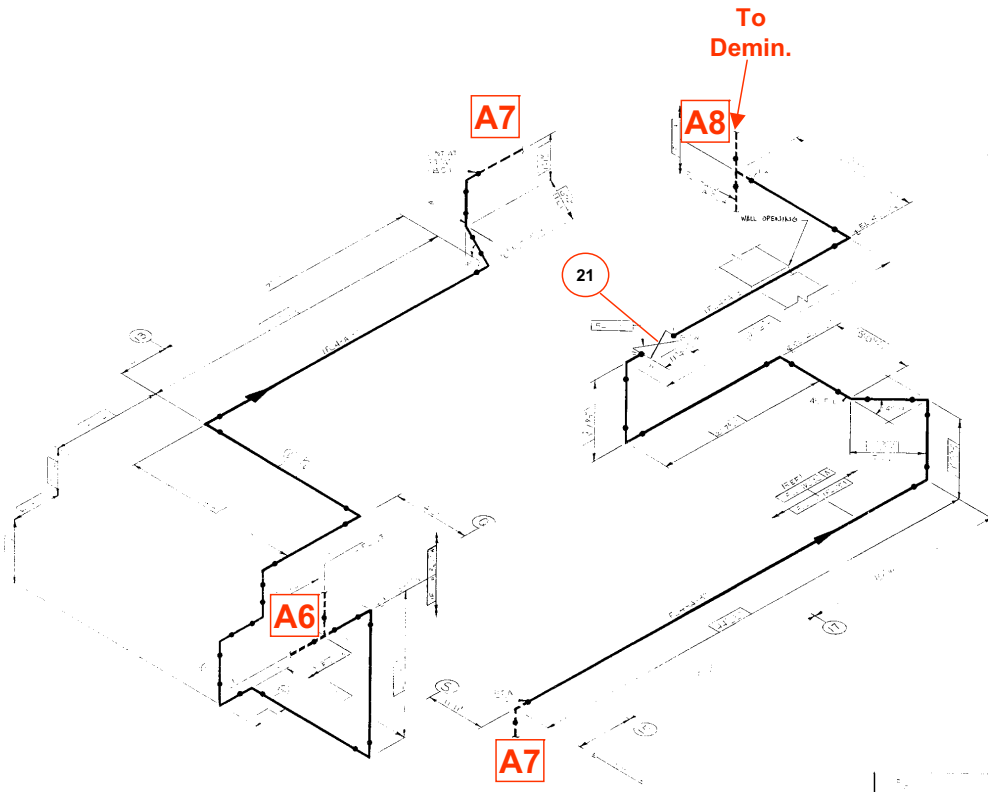

GROUP 46 – SPENT FUEL POOL CLEANING PIPING
SFP Cleanup System (Sheet 6 of 10)
(Covers Worksheets SS-SFPCLN – 1 thru 46)

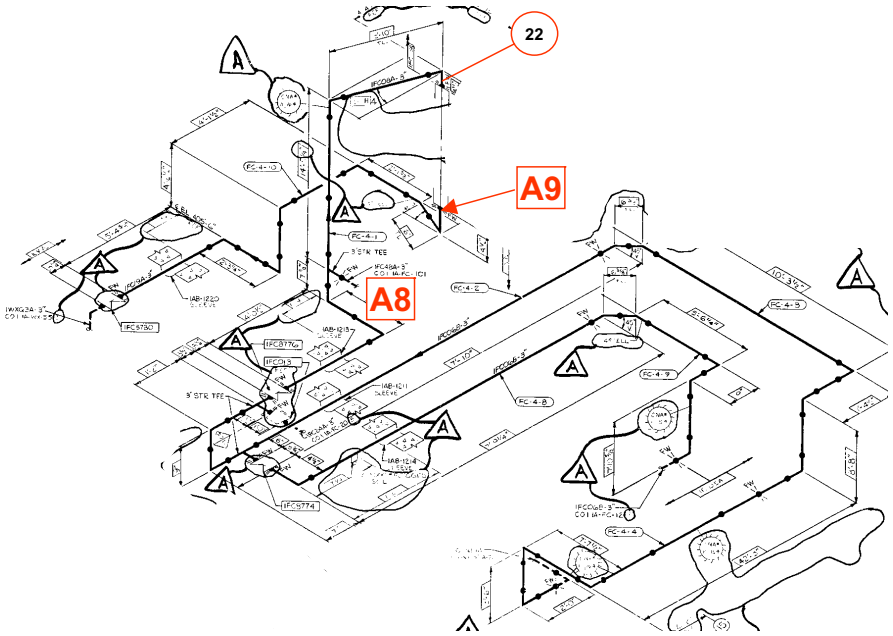

GROUP 46 – SPENT FUEL POOL CLEANING PIPING
SFP Cleanup System (Sheet 7 of 10)
(Covers Worksheets SS-SFPCLN – 1 thru 46)

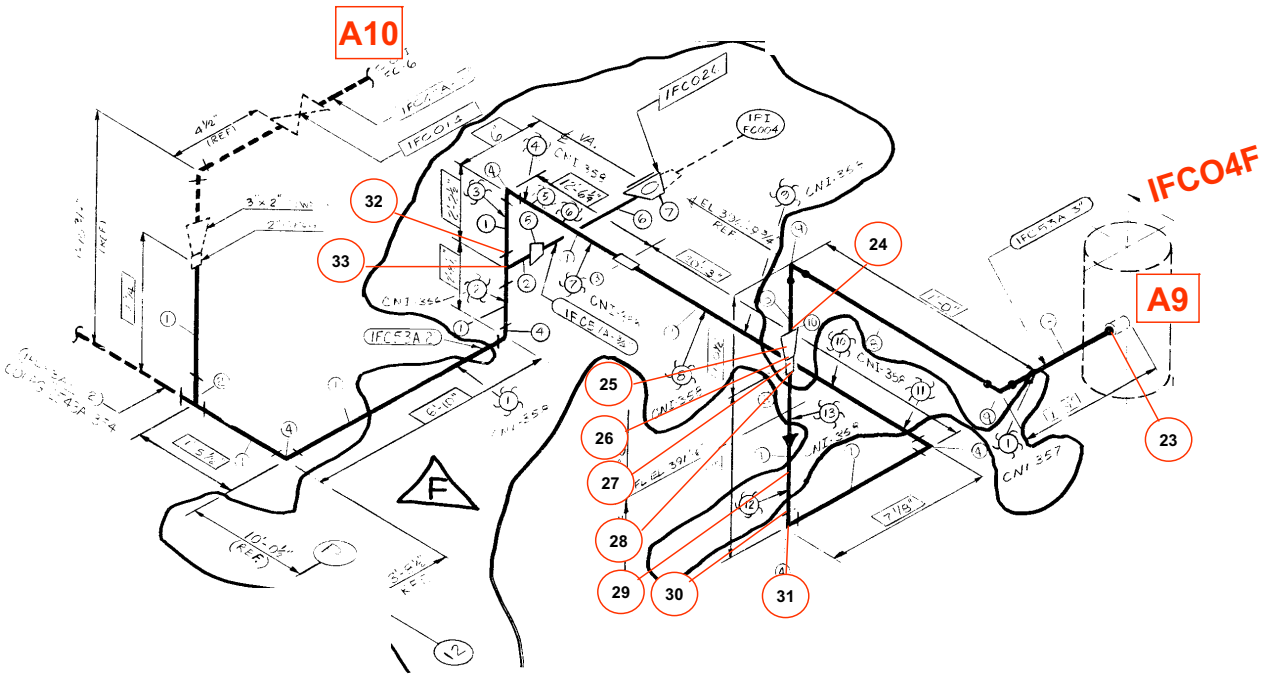

GROUP 46 – SPENT FUEL POOL CLEANING PIPING
SFP Cleanup System (Sheet 8 of 10)
(Covers Worksheets SS-SFPCLN – 1 thru 46)

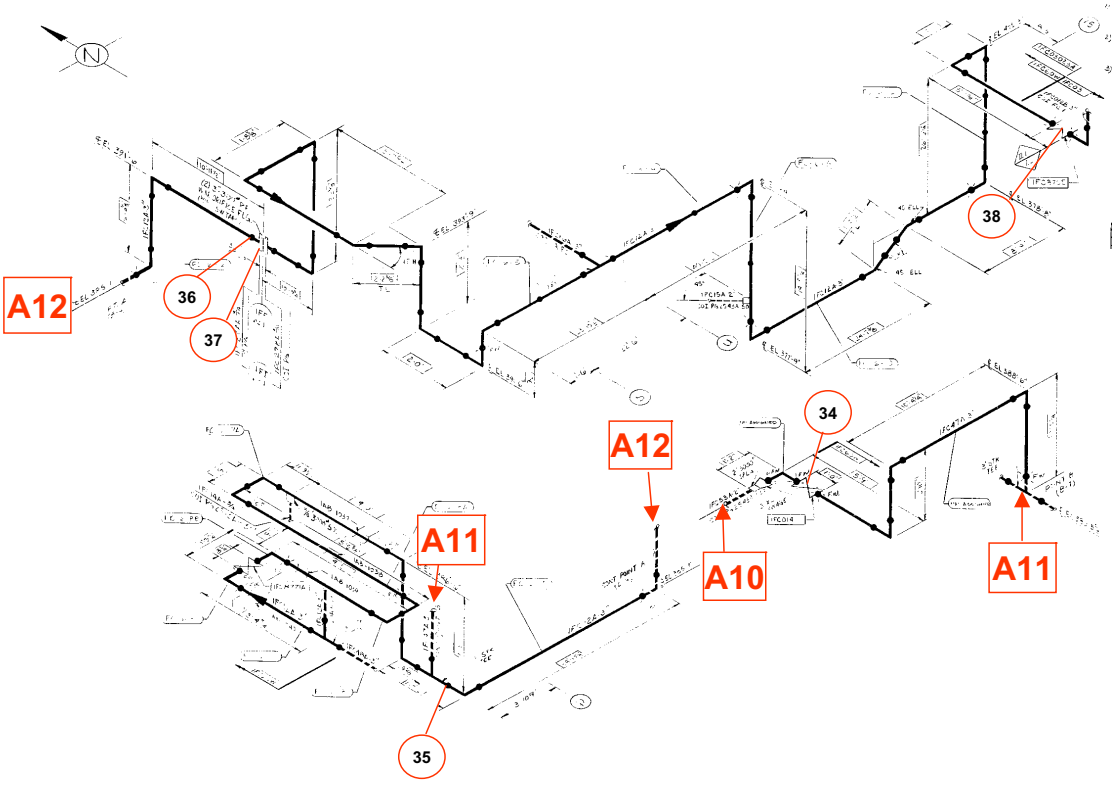

GROUP 46 – SPENT FUEL POOL CLEANING PIPING
SFP Cleanup System (Sheet 9 of 10)
(Covers Worksheets SS-SFPCLN – 1 thru 46)

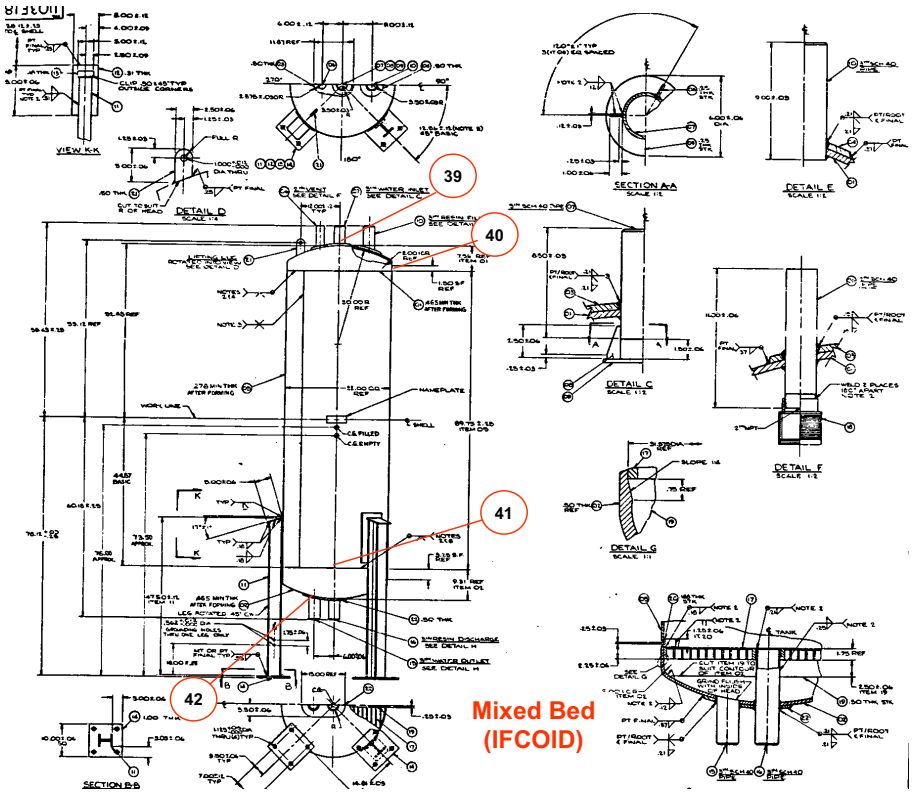

GROUP 46 – SPENT FUEL POOL CLEANING PIPING
SFP Cleanup System (Sheet 10 of 10)
(Covers Worksheets SS-SFPCLN – 1 thru 46)

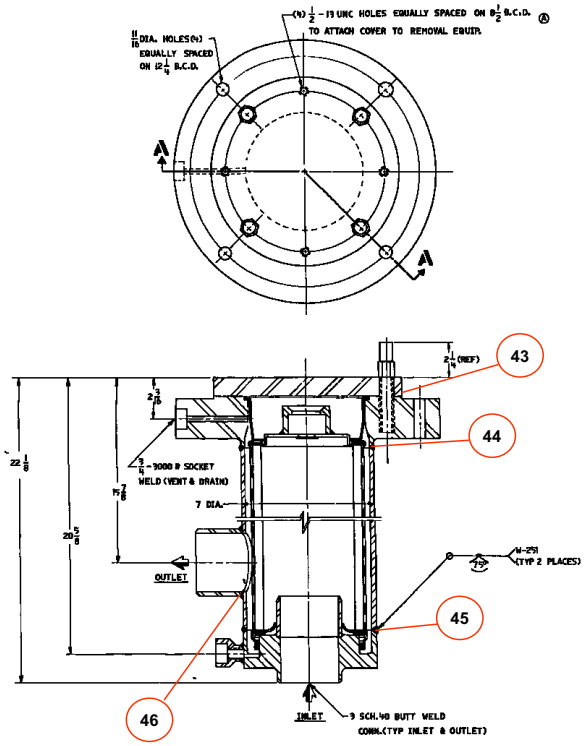

Spent Fuel Pit Filters (IFCO2F and IFC04F)

GROUP 47 – SPENT FUEL POOL AND RACKS
Spent Fuel Storage Pool (Sheet 1 of 10)
(Covers Worksheets AS- SFPRACK – 1 thru 9)

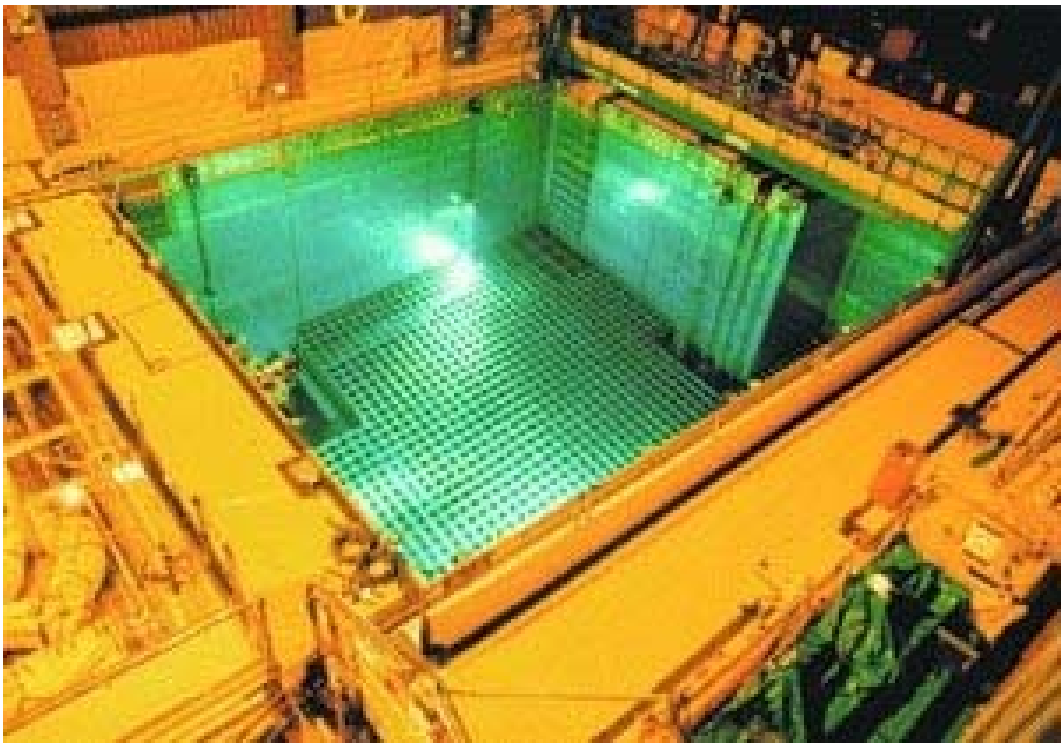

GROUP 47 – SPENT FUEL POOL AND RACKS
Rack Arrangement (Sheet 2 of 10)
(Covers Worksheets AS- SFPRACK – 1 thru 9)

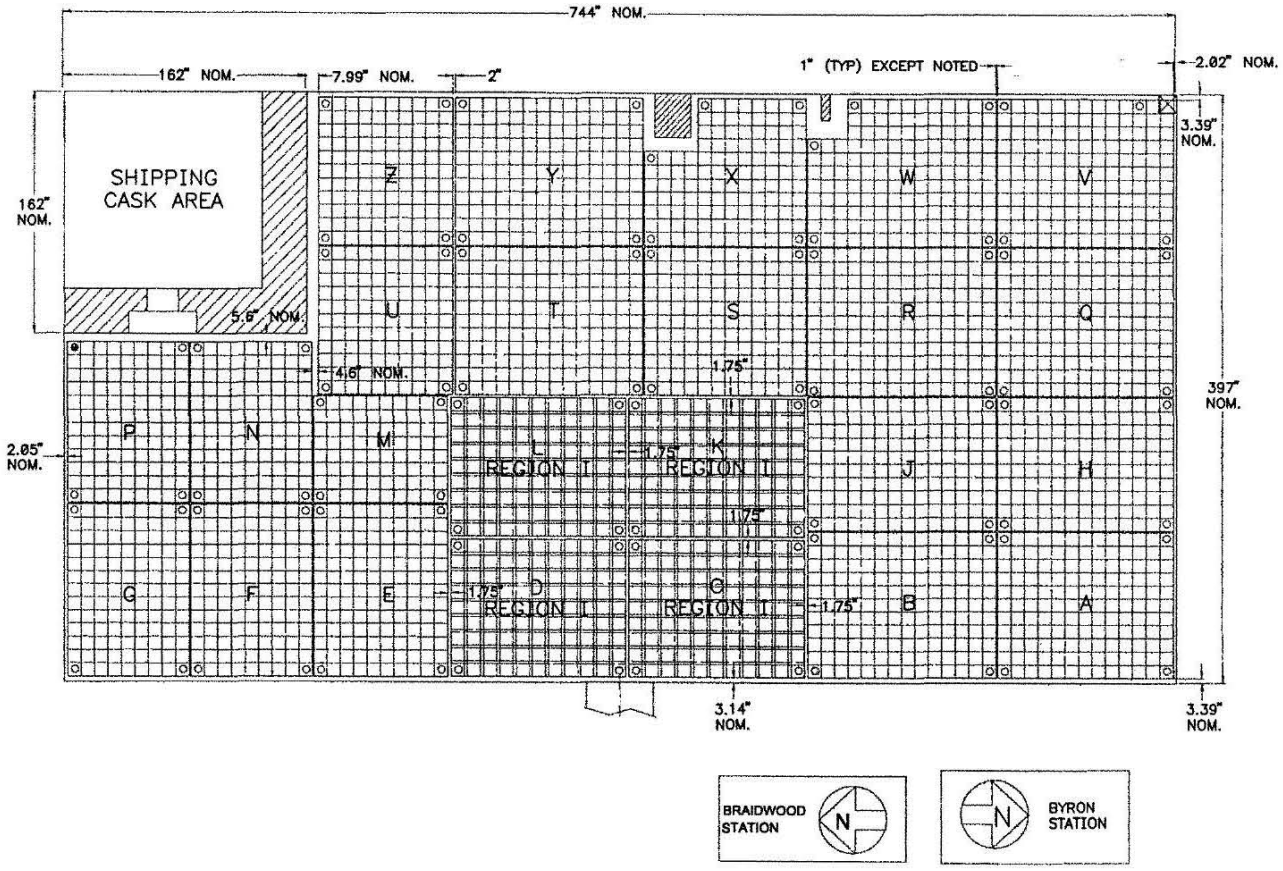

GROUP 47 – SPENT FUEL POOL AND RACKS
Pool Liner Plan (Sheet 3 of 10)
(Covers Worksheets AS- SFPRACK – 1 thru 9)

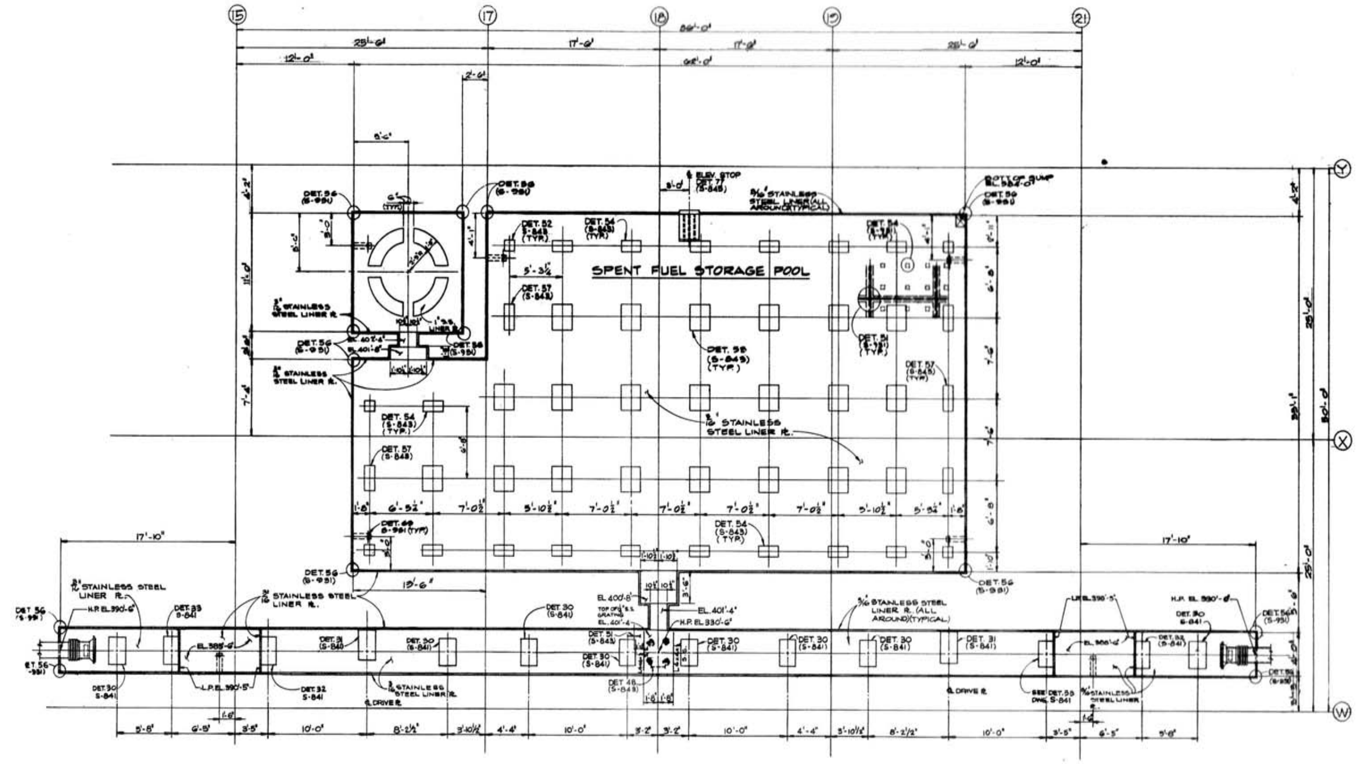

GROUP 47 – SPENT FUEL POOL AND RACKS
Pool Liner Details (Sheet 4 of 10)
(Covers Worksheets AS- SFPRACK – 1 thru 9)

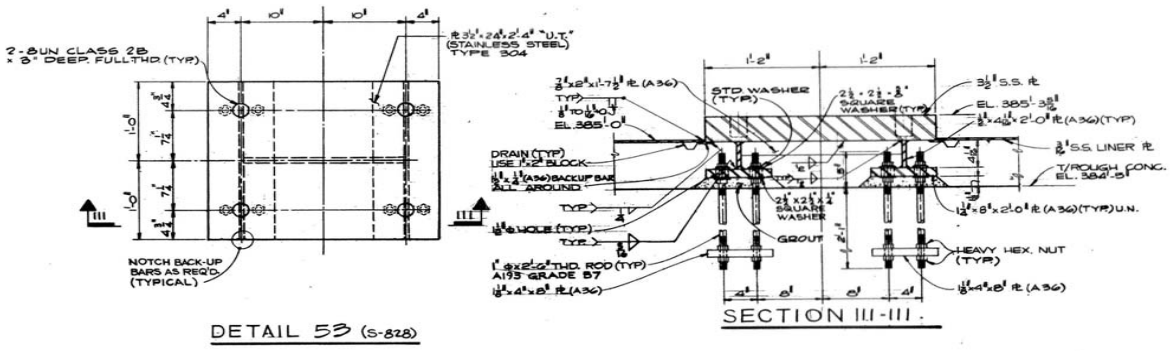

DETAIL 53 (S-828)

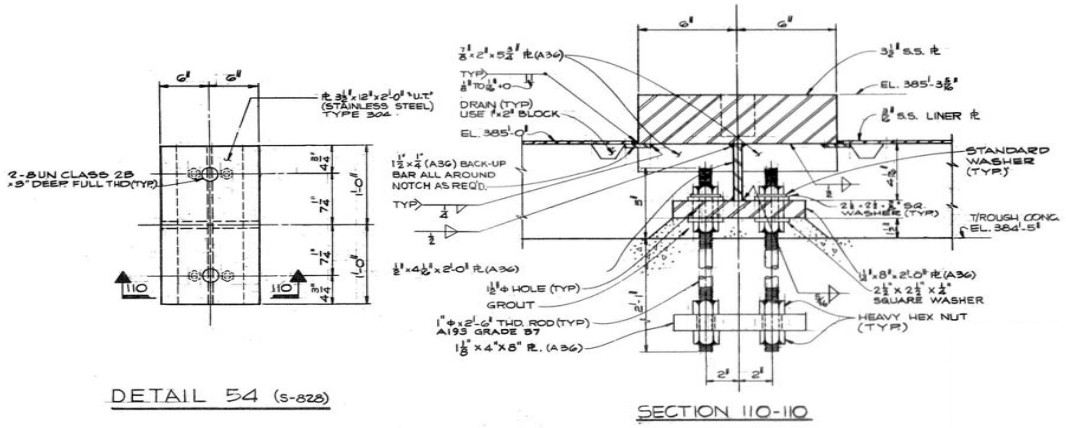

DETAIL 54 (S-828)

GROUP 47 – SPENT FUEL POOL AND RACKS
Storage Rack in Region 1 (Sheet 5 of 10)
(Covers Worksheets AS- SFPRACK – 1 thru 9)

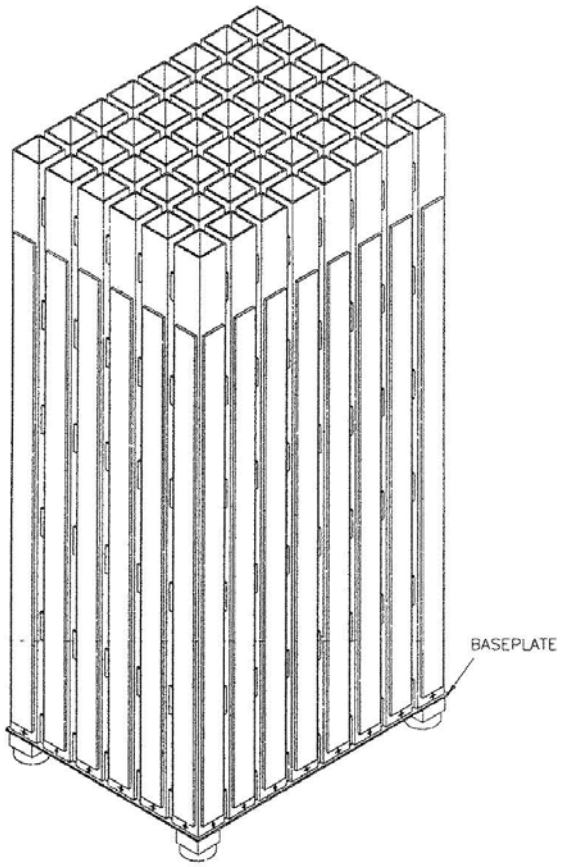

GROUP 47 – SPENT FUEL POOL AND RACKS
Typical Cell in Region 1 (Sheet 6 of 10)
(Covers Worksheets AS- SFPRACK – 1 thru 9)

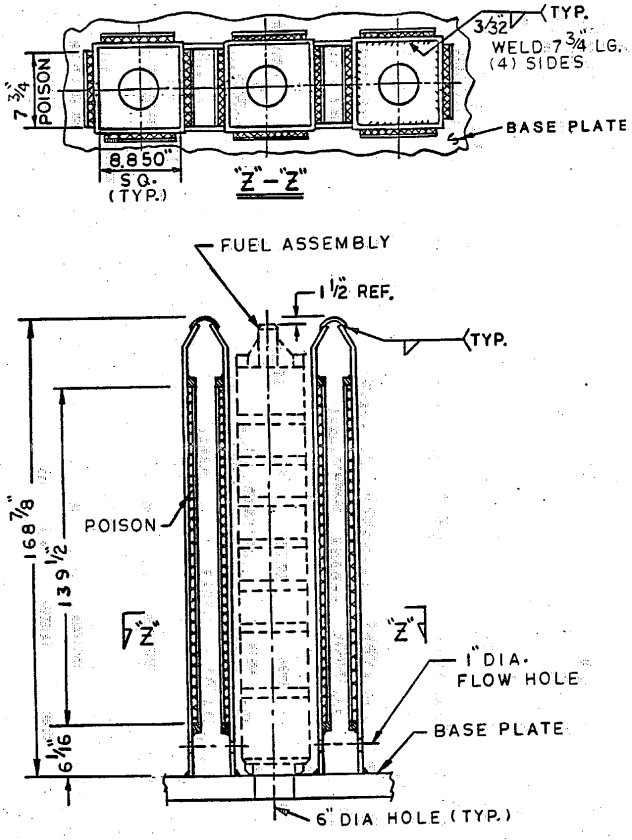

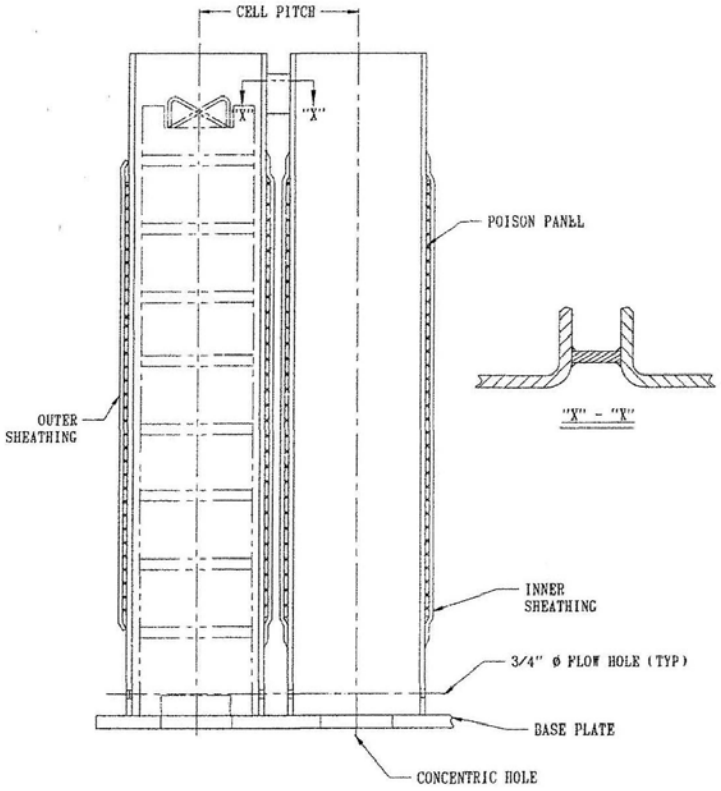

GROUP 47 – SPENT FUEL POOL AND RACKS
Storage Rack in Region 2 (Sheet 7 of 10)
(Covers Worksheets AS- SFPRACK – 1 thru 9)

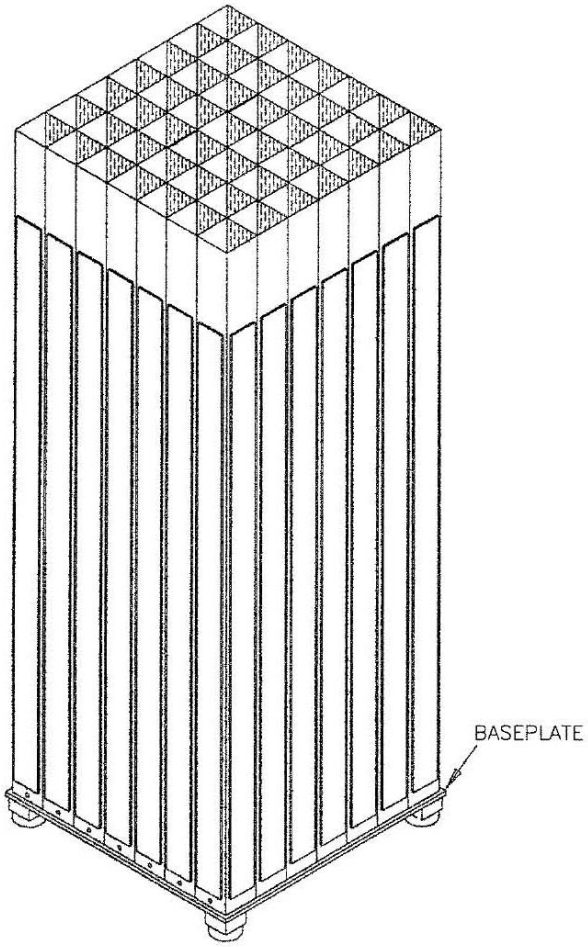

GROUP 47 – SPENT FUEL POOL AND RACKS
Typical Cell in Region 2 (Sheet 8 of 10)
(Covers Worksheets AS- SFPRACK – 1 thru 9)

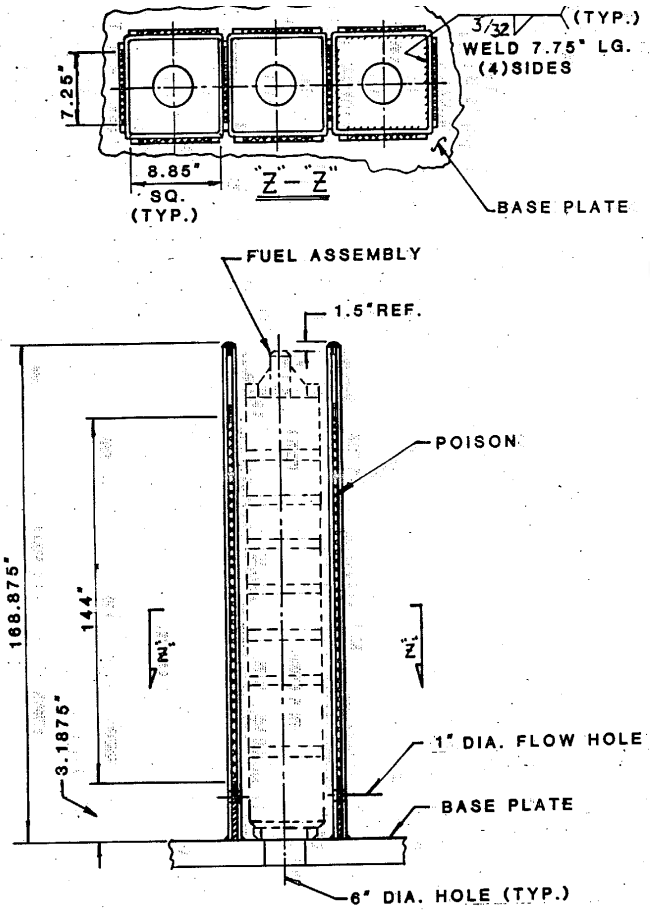

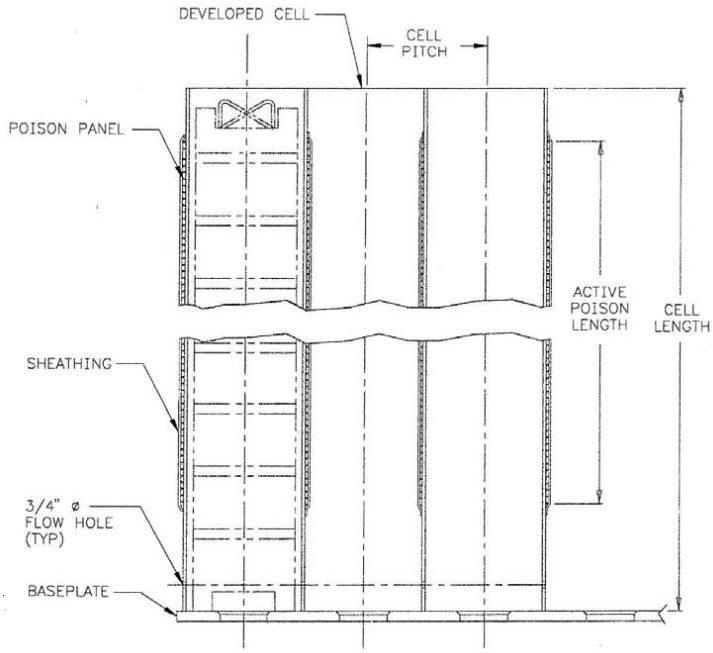

GROUP 47 – SPENT FUEL POOL AND RACKS
Rack Structure (Sheet 9 of 10)
(Covers Worksheets AS- SFPRACK – 1 thru 9)

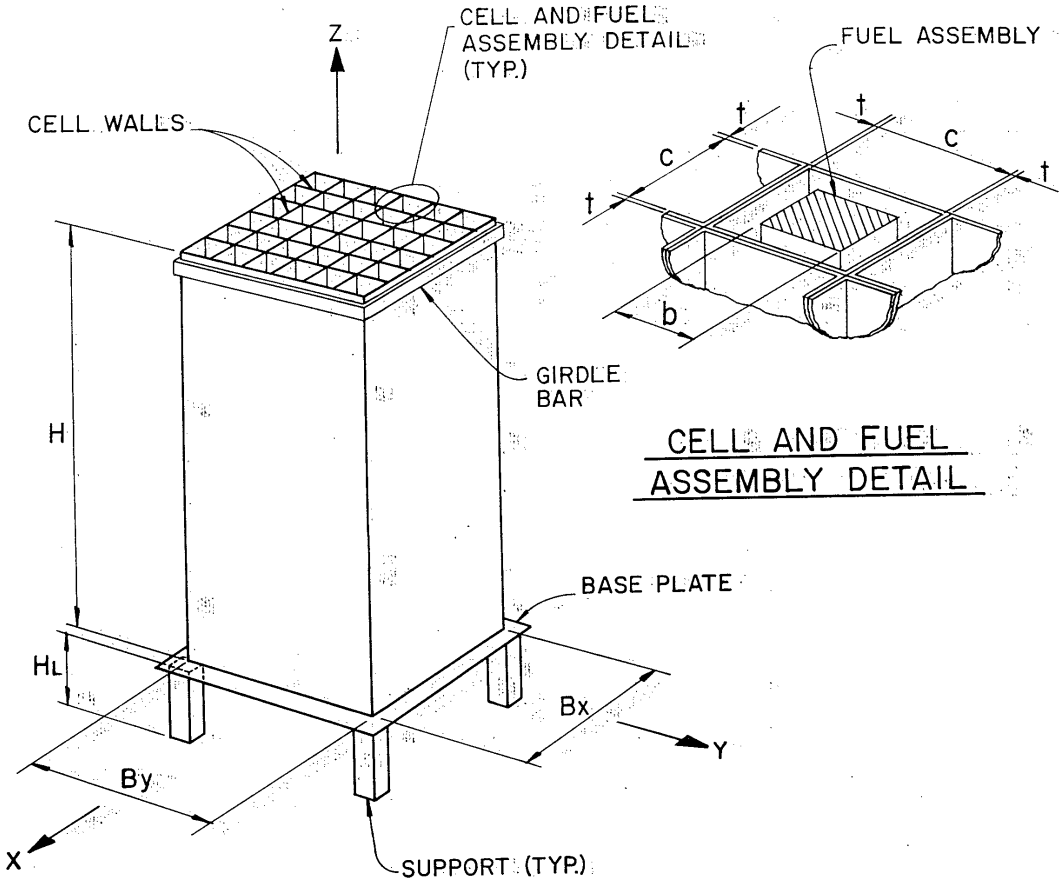

GROUP 47 – SPENT FUEL POOL AND RACKS
Adjustable Supports (Sheet 10 of 10)
(Covers Worksheets AS- SFPRACK – 1 thru 9)

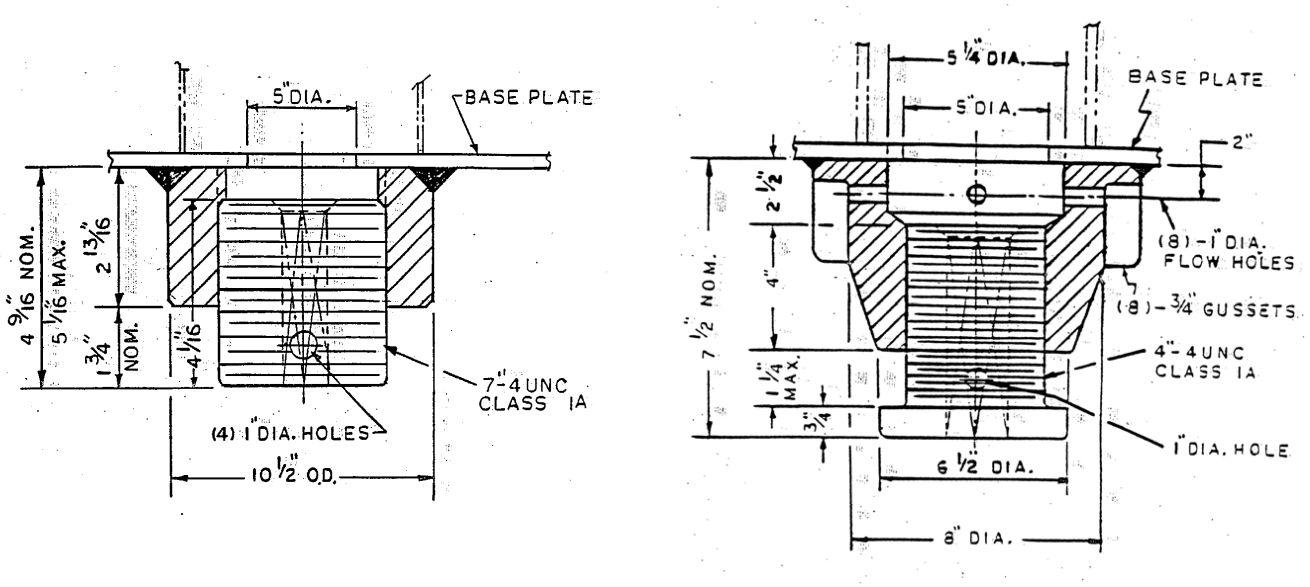

GROUP 48 – CONTAINMENT ISOLATION PENETRATIONS INSIDE CONTAINMENT CONFIG. 1- 3 (Sheet 1 of 12) (Covers Worksheets ESF- CONTPEN – 1 thru 10)

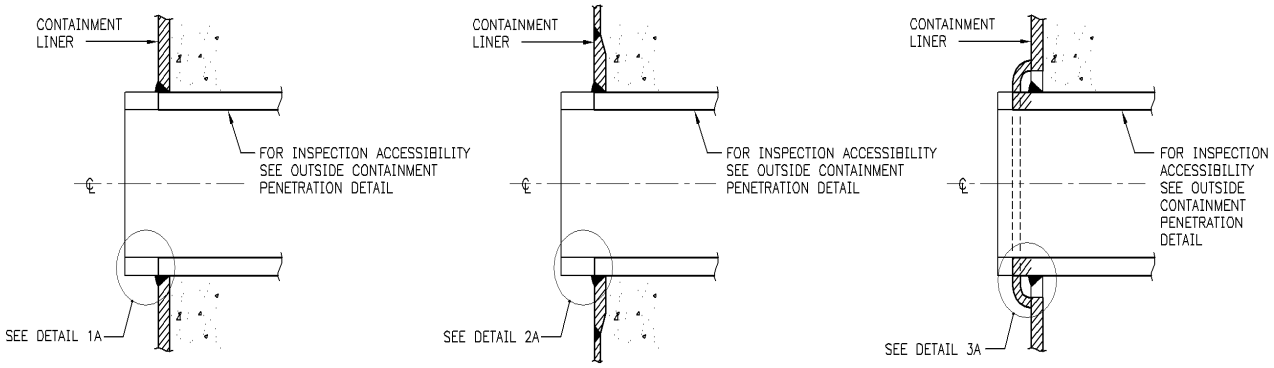

CONFIGURATION No. 1 CONFIGURATION No. 2 CONFIGURATION No. 3

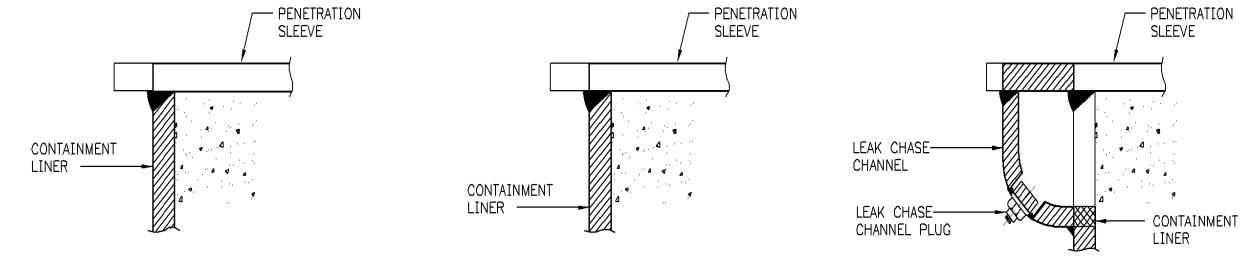

DETAIL 1A DETAIL 2A DETAIL 3A

GROUP 48 – CONTAINMENT ISOLATION PENETRATIONS INSIDE CONTAINMENT CONFIG. 4 & 5 (Sheet 2 of 12) (Covers Worksheets ESF- CONTPEN – 1 thru 10)

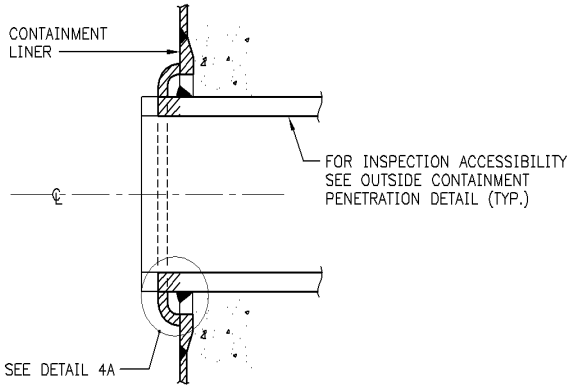

CONFIGURATION No. 4

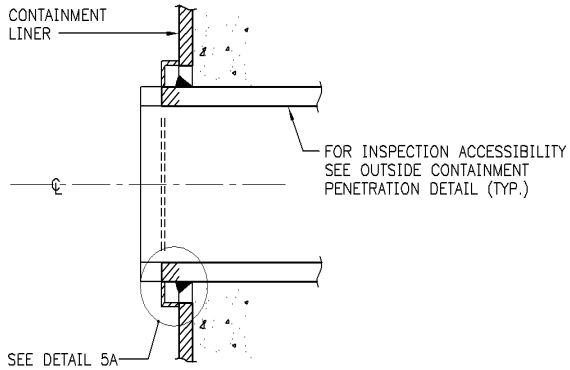

CONFIGURATION No. 5

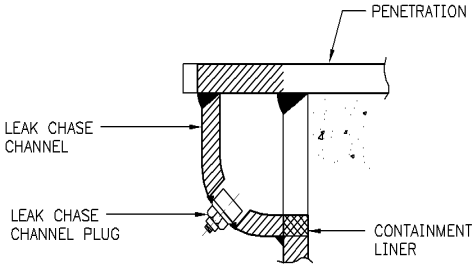

DETAIL 4A

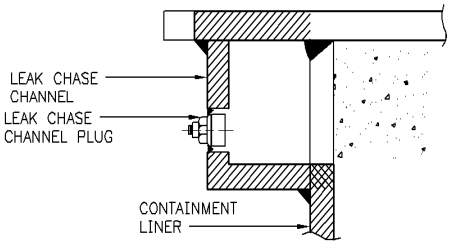

DETAIL 5A

NOTES:

1. FOR IWE COMPONENT INFORMATION SEE DRAWINGS 1–CISI–1001, SHTS. 1A THRU 1K AND 1–CISI–1001, SH. 11.

GROUP 48 – CONTAINMENT ISOLATION PENETRATIONS OUTSIDE CONTAINMENT CONFIG. 1 & 2 (Sheet 3 of 12) (Covers Worksheets ESF- CONTPEN – 1 thru 10)

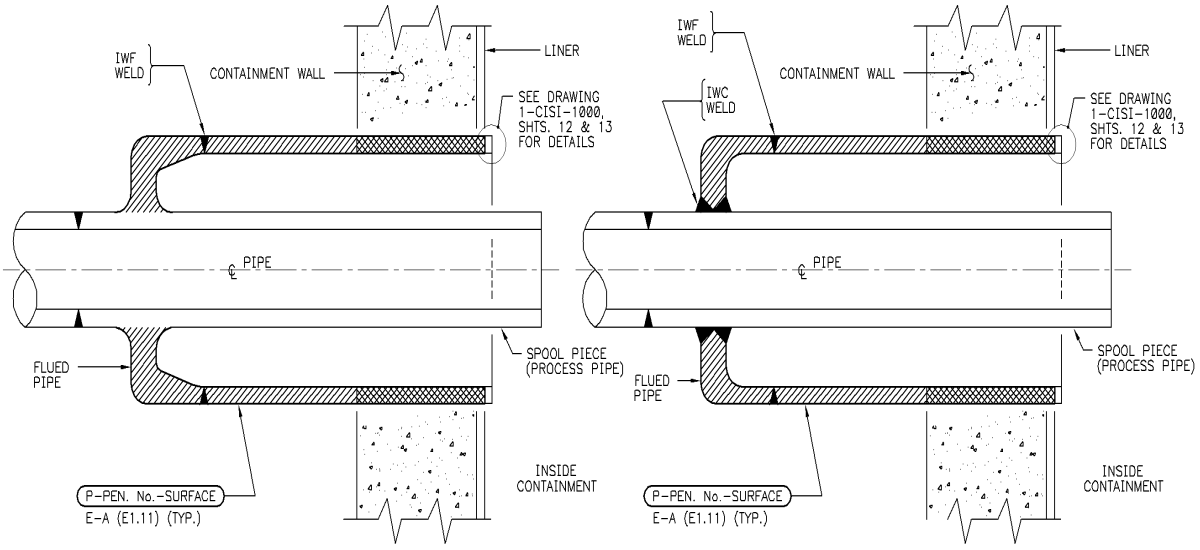

CONFIGURATION No. 1

CONFIGURATION No. 2

NOTES:

1. FOR IWE COMPONENT INFORMATION SEE DRAWINGS 1-CISI-1001, SHTS. 1A THRU 1F.

GROUP 48 – CONTAINMENT ISOLATION PENETRATIONS OUTSIDE CONTAINMENT CONFIG. 3 & 4 (Sheet 4 of 12) (Covers Worksheets ESF- CONTPEN – 1 thru 10)

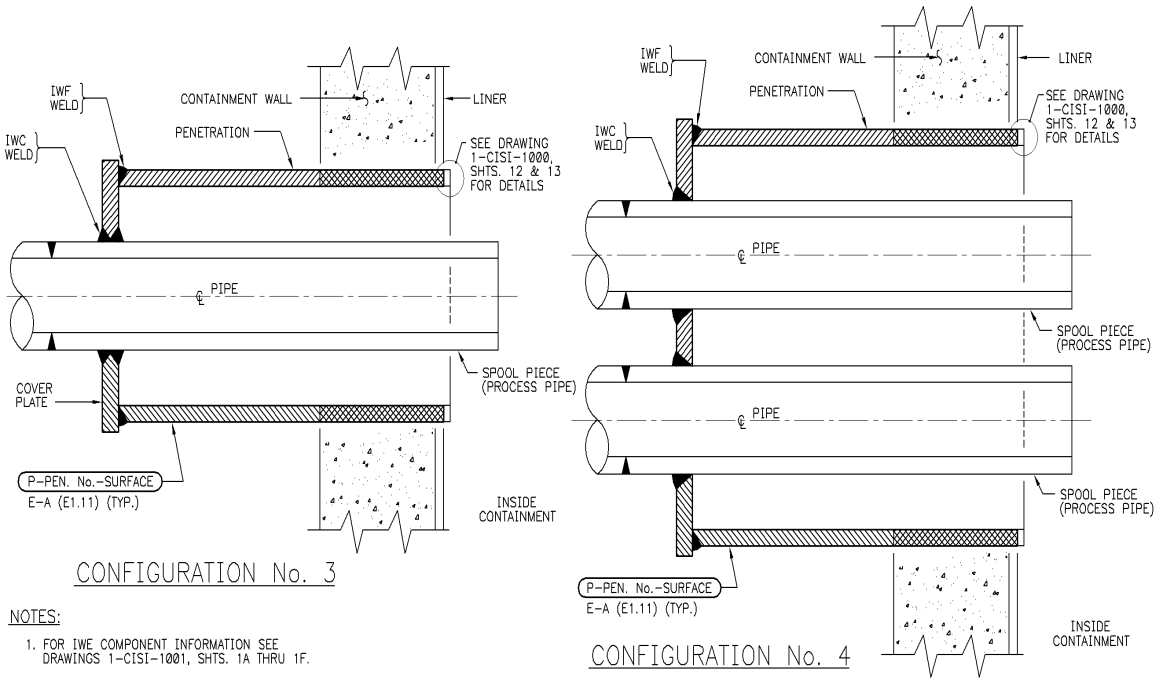

GROUP 48 – CONTAINMENT ISOLATION PENETRATIONS
OUTSIDE CONTAINMENT CONFIG. 5 (Sheet 5 of 12)
(Covers Worksheets ESF- CONTPEN – 1 thru 10)

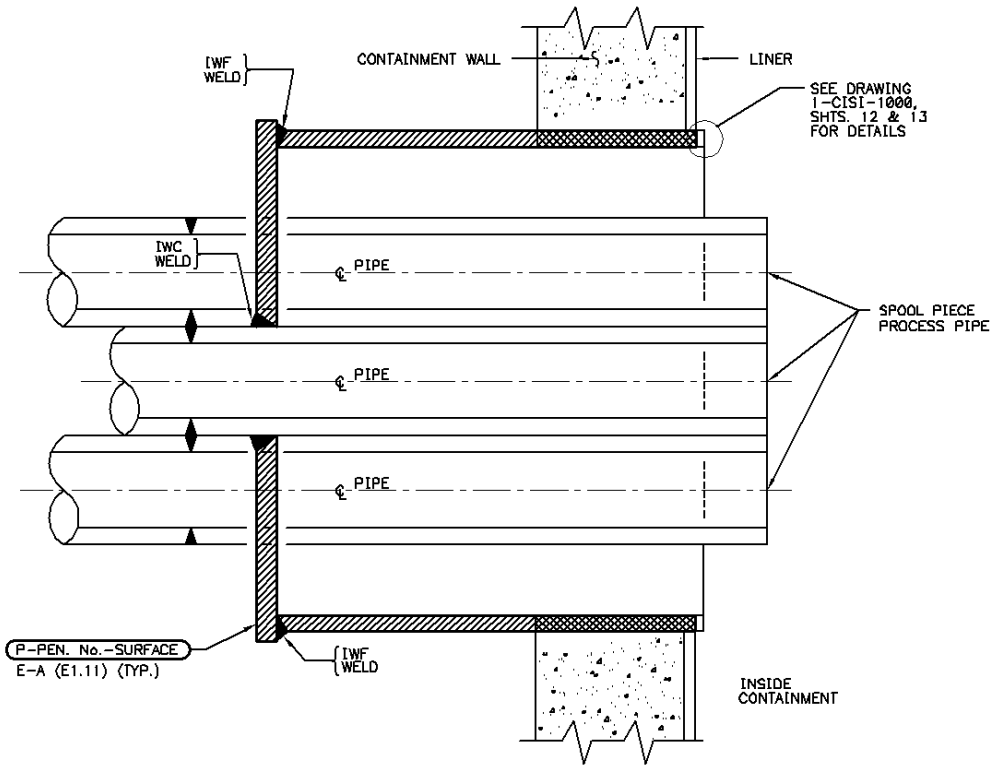

GROUP 48 – CONTAINMENT ISOLATION PENETRATIONS
OUTSIDE CONTAINMENT CONFIG. 6 (Sheet 6 of 12)
(Covers Worksheets ESF- CONTPEN – 1 thru 10)

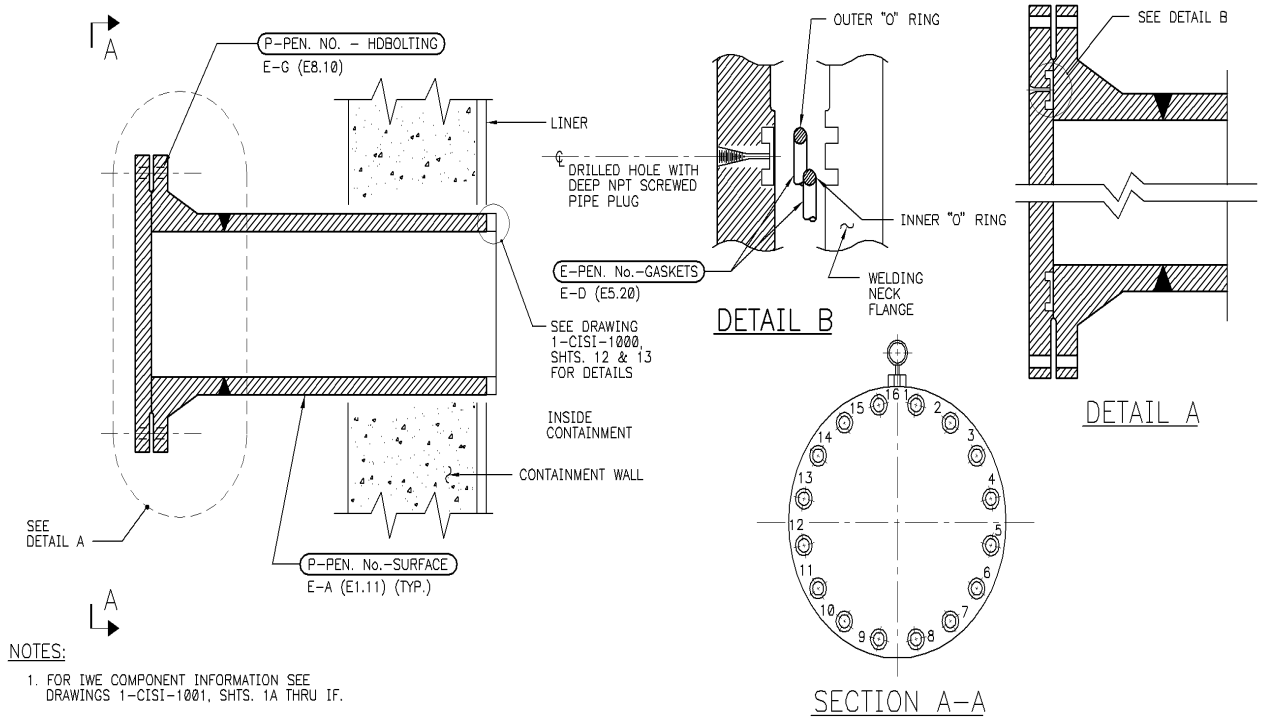

NOTES:

1. FOR IWE COMPONENT INFORMATION SEE DRAWINGS 1-CISI-1001, SHTS. 1A THRU 1F.

GROUP 48 – CONTAINMENT ISOLATION PENETRATIONS
OUTSIDE CONTAINMENT CONFIG. 7 (Sheet 7 of 12)
(Covers Worksheets ESF- CONTPEN– 1 thru 10)

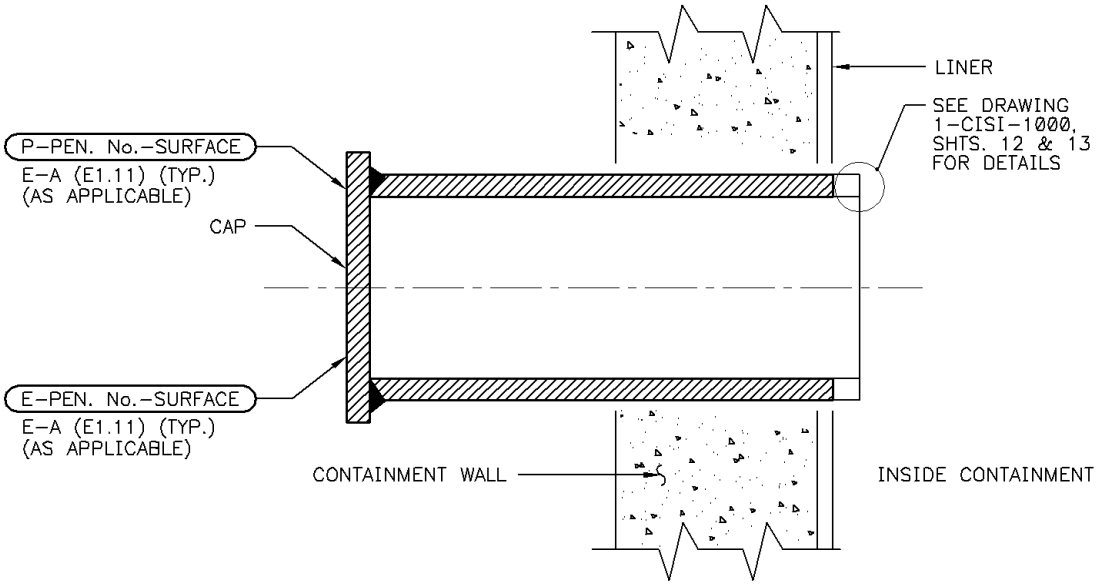

GROUP 48 – CONTAINMENT ISOLATION PENETRATIONS
RECIRC SUMP GUARD PIPE & BELLOWS (Sheet 8 of 12)
(Covers Worksheets ESF- CONTPEN– 1 thru 10)

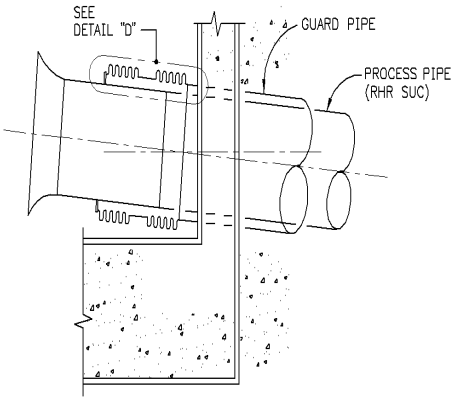

PARTIAL ELEVATION
RECIRC. SUMP A & B

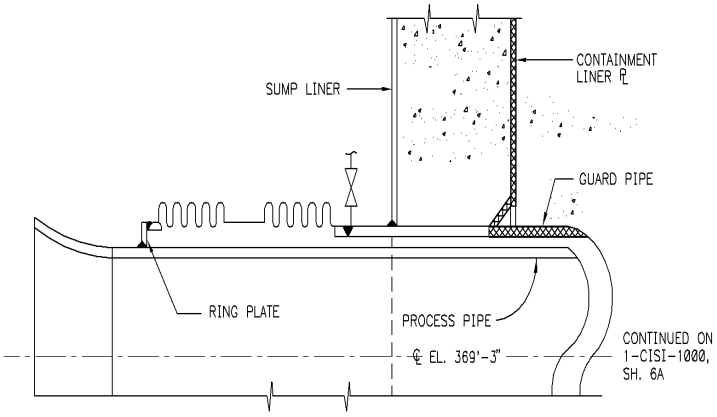

DETAIL D
RECIRC. SUMP BELLOWS

NOTES:
1. ALL IWE SURFACES ARE INACCESSIBLE. NO EXAMINATIONS REQUIRED AT THESE LOCATIONS.

GROUP 48 – CONTAINMENT ISOLATION PENETRATIONS
Detail 22-CCW; Detail 23-SW; Detail 24-MS/FW (Sheet 9 of 12)
(Covers Worksheets ESF- CONTPEN– 1 thru 10)

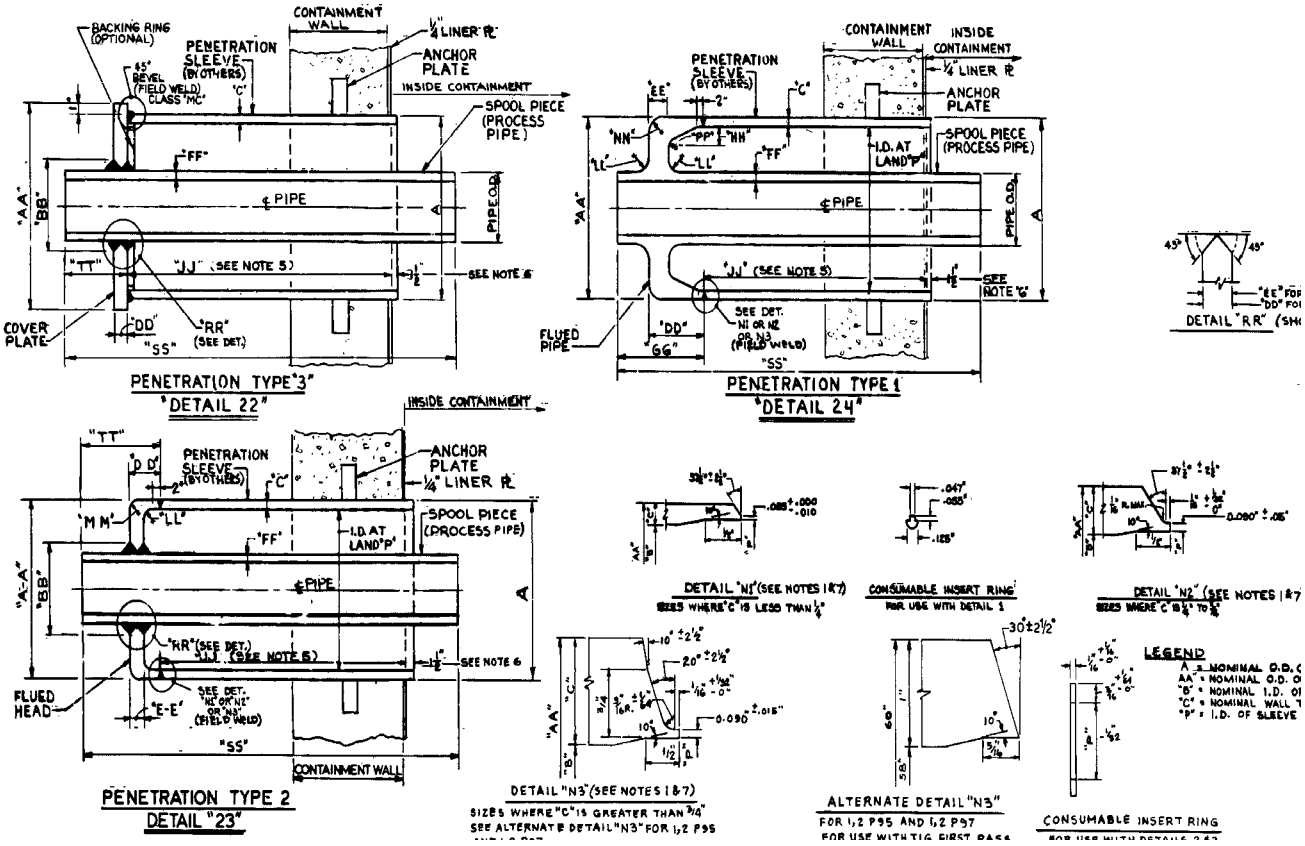

GROUP 48 – CONTAINMENT ISOLATION PENETRATIONS
MAIN STEAM AND FEEDWATER (Sheet 10 of 12)
(Covers Worksheets ESF- CONTPEN– 1 thru 10)

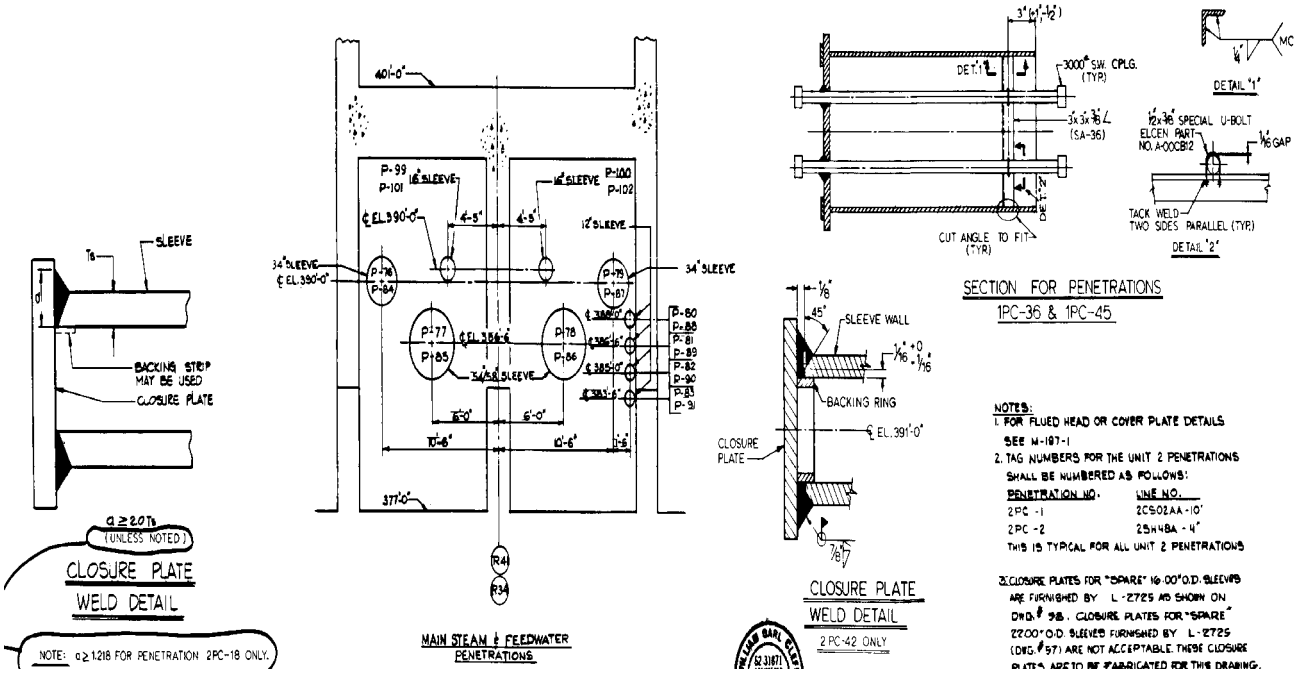

NOTES:
1. FOR FLUED HEAD OR COVER PLATE DETAILS SEE M-187-1
2. TAG NUMBERS FOR THE UNIT 2 PENETRATIONS SHALL BE NUMBERED AS FOLLOWS:

PENETRATION NO.	LINE NO.
2PC -1	2CS02AA-10"
2PC -2	2SI48A-4"

THIS IS TYPICAL FOR ALL UNIT 2 PENETRATIONS

3. CLOSURE PLATES FOR "SPARE" 16.00" O.D. SLEEVES ARE FURNISHED BY L-2725 AS SHOWN ON DWG. # 98. CLOSURE PLATES FOR "SPARE" 22.00" O.D. SLEEVES FURNISHED BY L-2725 (DWG. # 97) ARE NOT ACCEPTABLE. THESE CLOSURE PLATES ARE TO BE FABRICATED FOR THIS DRAWING.

GROUP 48 – CONTAINMENT ISOLATION PENETRATIONS
MISC CONFIGURATIONS (Sheet 11 of 12)
(Covers Worksheets ESF- CONTPEN – 1 thru 10)

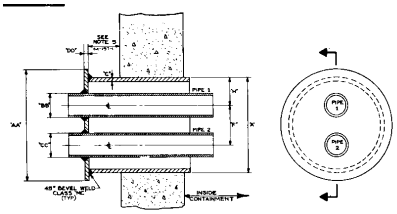

PENETRATION TYPE 4
DETAIL 25

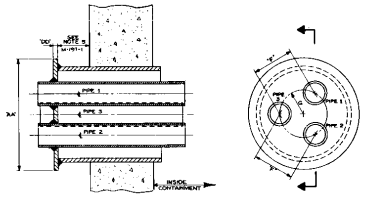

PENETRATION TYPE 5
DETAIL 26

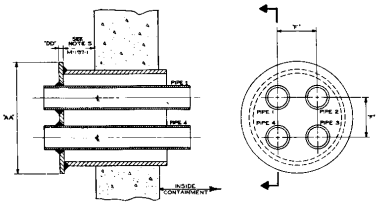

PENETRATION TYPE 6
DETAIL 27

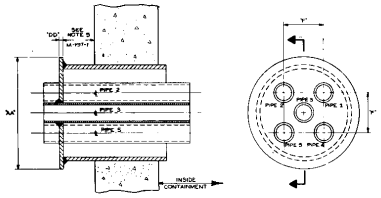

PENETRATION TYPE 7
DETAIL 28

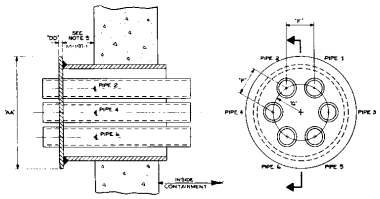

PENETRATION TYPE 8
DETAIL 29

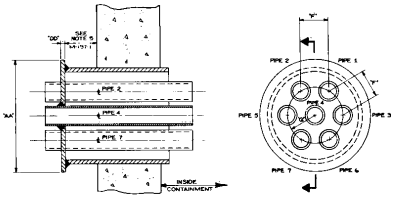

PENETRATION TYPE 9
DETAIL 30

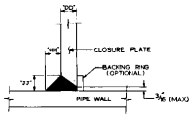

DETAIL N4

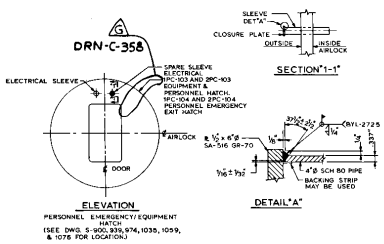

ELEVATION
PERSONNEL EMERGENCY/EQUIPMENT HATCH
(SEE DWG. S-900, 935, 974, 1035, 1059, & 1076 FOR LOCATION)

DETAIL "A"

SECTION "1-1"

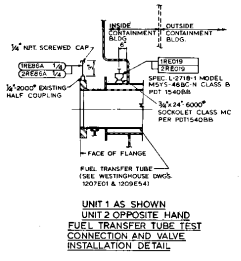

UNIT 1 AS SHOWN
UNIT 2 OPPOSITE HAND
FUEL TRANSFER TUBE TEST CONNECTION AND VALVE INSTALLATION DETAIL
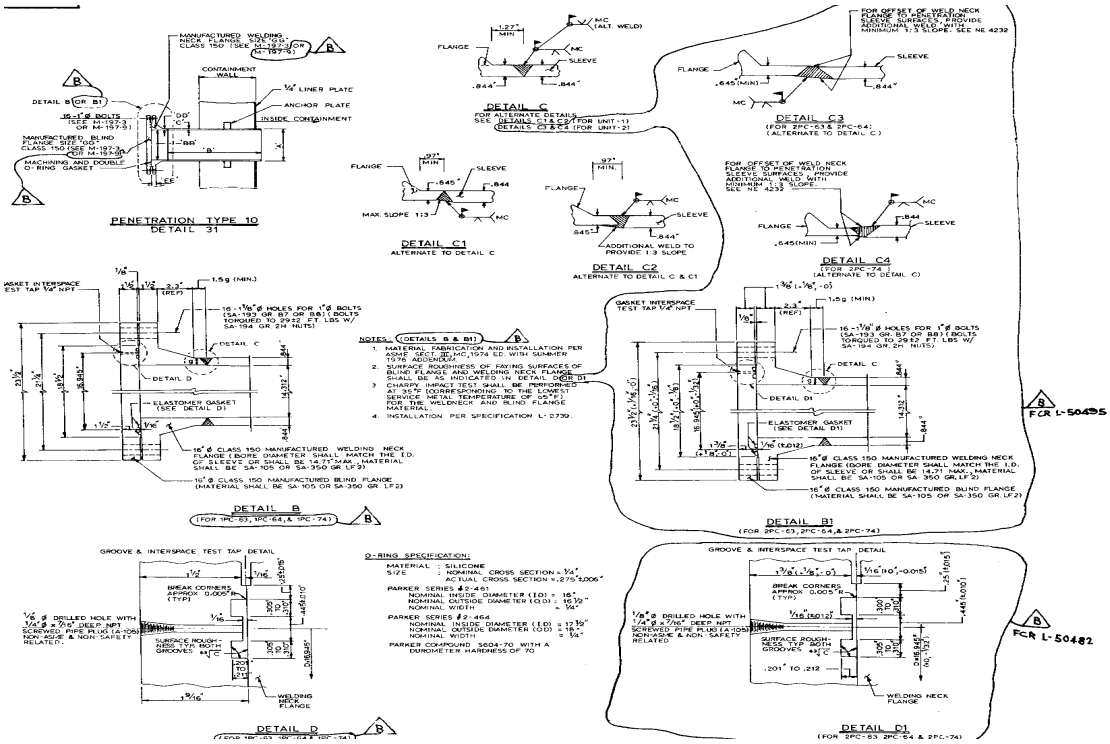
GROUP 48 – CONTAINMENT ISOLATION PENETRATIONS
SPECIAL PIPING DETAILS (Sheet 12 of 12)
(Covers Worksheets ESF- CONTPEN – 1 thru 10)